IBM

"Selectric" Typewriter



IBM "Selectric" Typewriter (7XX)

IBM "Selectric" II Typewriter (8XX)

IBM Correcting "Selectric" II Typewriter (8XX)

IBM 96 "Selectric" Typewriter (9XX)

"SELECTRIC" TYPEWRITERS
SERVICE MANUAL CONTENTS
(Alphabetical)

Page

FUNCTIONAL CHECK
- *"Selectric" Typewriter* . . . 3
- *"Selectric" II Typewriter – Dual Pitch* . . . 6
- *Correcting "Selectric" II Typewriter* . . . 8

INTRODUCTION . . . 1

MECHANISM OPERATION AND ADJUSTMENTS
- *Backspace*
  - *Express Backspace* . . . 131
  - *Half Backspace* . . . 127
  - *Rotary Backspace* . . . 119
  - *Non-Rotary Backspace* . . . 115
- *Carrier Return* . . . 105
- *Character Selection* . . . 47
- *Correcting* . . . 211
- *Covers* . . . 231
- *Escapement – NRB/S* . . . 75
- *Escapement – RB/S* . . . 81
- *Fine Alignment* . . . 37
- *Index* . . . 167
- *Keyboard* . . . 19
- *Margins and Linelock* . . . 225
- *Motor and Drive* . . . 9
- *Operational Control* . . . 89
- *Paper Feed and Index* . . . 167
- *Print* . . . 153
- *Ribbon*
  - *Fabric Ribbon* . . . 191
  - *Film Ribbon* . . . 181
  - *Selective Ribbon* . . . 199
- *Spacebar* . . . 97
- *Shift* . . . 31
- *Switch Pitch* . . . 69
- *Tabulation – NRB/S* . . . 135
- *Tabulation – RB/S* . . . 145

SPECIAL MACHINE FEATURES
- *Card Holding Platen* . . . 237
- *Dead Key Disconnect Mechanism* . . . 239
- *Dead Key Mechanism* . . . 241
- *Double Indexing Device* . . . 245
- *External Ribbon Control* . . . 249
- *Manual Velocity Control* . . . 251
- *Pin Feed Platen* . . . 255
- *Shift Sensing Mechanism* . . . 259
- *Stroke Counter* . . . 261

Page

REMOVAL PROCEDURES
- *Carrier and Rocker Assembly Removal* . . . 263
- *Carrier Return/Backspace Cable Drum Assembly Removal – RB/S* . . . 273
- *Compensator Balls Removal* . . . 273
- *Cord Replacement* . . . 270
- *Cover Removal* . . . 263
- *Cycle Clutch and Cycle Shaft Removal* . . . 263
- *Drive Belt Removal* . . . 263
- *Dual Transport Change* . . . 271
- *Escapement Rack Removal – Dual Pitch* . . . 273
- *Escapement Pawl Removal* . . . 269
- *Keyboard Interposer Removal* . . . 264
- *Keybuttons Removal* . . . 264
- *Keylever Removal* . . . 264
- *Lubrication Guide* . . . 273
- *Margin Rack & Rail – Dual Pitch* . . . 273
- *Operational Cam Follower Replacement* . . . 265
- *Operational Cam Follower Roller* . . . 267
- *Operational Shaft Removal* . . . 265
- *Paper Feed (A Frame)* . . . 272
- *Print Sleeve Removal (Correcting)* . . . 269
- *Print Sleeve Removal (Non-Correcting)* . . . 269
- *Rocker Assembly Removal* . . . 263
- *Rotate Selection Differential Removal* . . . 264
- *Rotate Spring Replacement* . . . 265
- *Rotate Tape Replacement* . . . 269
- *Shift Cam Removal* . . . 264
- *Tilt Ring and Rotate Shaft Removal* . . . 263
- *Tilt Tape Replacement* . . . 269
- *27-Tooth Ratchet Assembly Removal* . . . 272
- *54-Tooth Ratchet Assembly Installation* . . . 272

The purpose of this manual is to describe the operational theory and a sequence of adjustments to help in servicing the "Selectric," "Selectric" II, and Correcting "Selectric" typewriters. This manual covers Models 7X1, 7X3, 7X5, 8X3, 8X5, 9X3 (WT), and 9X5 (WT).

It is necessary for those who use this manual to be familiar with operator instructions. It is suggested that the Adjustment/Parts Manual (F/N S241-5939) be used with this manual. Also, there are six special tools needed when using this manual and performing the adjustments and checks. These tools are: the Hooverometer, Platen Gauge, Rotate Selection Adjustment Tool, Hand Cycling Wheel, Volt-Ohm Meter and the Operational Cam Follower Roller Removal Tool. Use of the Hooverometer, Platen Gauge, Rotate Selection Adjustment Tool and Meter are easy to understand in the adjustments that require their use. The hand cycling wheel fits into the right end of the operational shaft and is used to operate the machine by hand to view an adjustment or the mechanism operation.

The Machine Introduction section of this manual includes the functions and applications of the machine and its features.

The Functional Check section is shown in a sequence so that important functions of the machine are checked for proper operation. However, this check does not necessarily follow the sequence of operational theory and adjustments within the manual. The functional check should be used to help locate problems on the machine.

The operation of the machine mechanisms is separated into two sections. The adjustment section will follow the theory of operation section.

In the Adjustment part of the section, each adjustment is in the sequence that the adjustments are to be made. When an adjustment is made, all adjustments that follow in that mechanism must be checked to ensure the adjustment did not affect an adjustment later in the sequence. The part to be adjusted and the direction the part must be adjusted are printed in red. When required, the view, the model of machine, level of design and mode or condition of the equipment is noted under the drawing. There may be times when adjustment sequences or tolerances differ from those in other related publications. However, the publication with the latest date should normally be considered the most current.

The Removals Procedures section is a numbered sequence of instructions for parts removal. The part can be assembled by reversing the removal steps.

If a detailed drawing of an assembly is required, the parts section of the Adjustment/Parts Manual should be used.

All drawings are front right views unless noted, or are easily understood by the reader.

When servicing the machine, all safety procedures must be followed. All guards and shields must be properly installed before the machine is ready for use.

WARNING

Keep hair, fingers and personal objects (such as bracelets, necklaces, neckties, etc.) out of the machine when the machine is on.

MACHINE INTRODUCTION

The IBM "Selectric" Typewriter is available with film or fabric ribbon and features an 88 character typing element. (96 character type elements are used with World Trade machines.) The typing element is easily removed to allow changing the typestyle.

An impression control allows the operator to change the impression of the typing element. An automatic velocity control changes the impression of the characters located in certain keyboard positions to a lighter impression.

A storage mechanism reduces typing errors by storing the second of two quickly typed characters until the first is printed.

The paper mechanism remains in place and the element moves across the paper. The underscore, backspace, spacebar, index key and carrier return are typamatic keys.

The applications of the "Selectric" Typewriter include all types of standard typing, preparation of master copy for most types of duplicating, carbon copies, stencil writing and formswriting. The machine is also available with changes in the element, keyboard and cardholder for Optical Character Recognition applications.

The IBM "Selectric" II Typewriter has all of the features of the "Selectric" Typewriter plus these additional features:

1. *Dual Pitch* – Allows the operator to select the typestyle and spacing to fit the application – whether it is standard typing, manifolding, OCR, speech writing, legal, file indexes, or other.

2. *Selective Ribbon System* – Allows the use of film ribbon or the IBM Tech III ribbon, both contained in cartridges for easier changes. The IBM Tech III ribbon gives a high quality image on a wide range of surfaces. It also offers a high character output which provides a longer lasting ribbon.

3. *Express Backspace* – Moves the carrier to the left quickly, under complete control of the operator, while remaining on the same writing line.

4. *Half Backspace (Dual Pitch Only)* – Allows typing half-way between two characters or spaces allowing the operator to insert a character.

The IBM Correcting "Selectric" Typewriter provides the operator with an effective way of correcting original copy from the keyboard.

The correcting keybutton is on the right side of the keyboard. If an error is made, the keybutton is depressed and the incorrect character retyped. All actions necessary to position the carrier over the incorrect character, place the correcting tape in position and maintain the proper carrier position following the correction, are performed by one operation of the correcting keybutton.

The correcting mechanism operates with two types of correcting supplies. Both types use a correcting tape mounted on the carrier, next to the ribbon. If the operator selects the lift-off correcting tape, an IBM Correctable Film Ribbon must be used. If the IBM Tech III cover-up correcting tape is used, an IBM Tech III ribbon must be used. Both types of correcting tapes are color coded for identification and can be easily installed.

THE IBM 96 "SELECTRIC" TYPEWRITER (WT)

The purpose of a 96 character typewriter is to meet the requirements of customers that need more than 88 characters. Without such a machine, they must use typebar machines with changeable typebars, have Customer Engineers change some type slugs, or use an 88 character "Selectric" Typewriter and change the type element. For example, IBM has type elements available for typing Greek characters or mathematical symbols.

The IBM 96 "Selectric" Typewriter will reduce type element changes by the customer.

The requirement for more than 88 characters is especially strong in Germany and Japan. This is also true in some English-speaking nations which do business with non-English speaking countries.

Information in this manual which relates to World Trade machines only has been shaded for quick identification.

FUNCTIONAL CHECK – IBM "SELECTRIC" TYPEWRITER

This functional check is a procedure that is used to determine whether or not an IBM "Selectric" Typewriter has any malfunctions. It includes checks of every function of the machine.

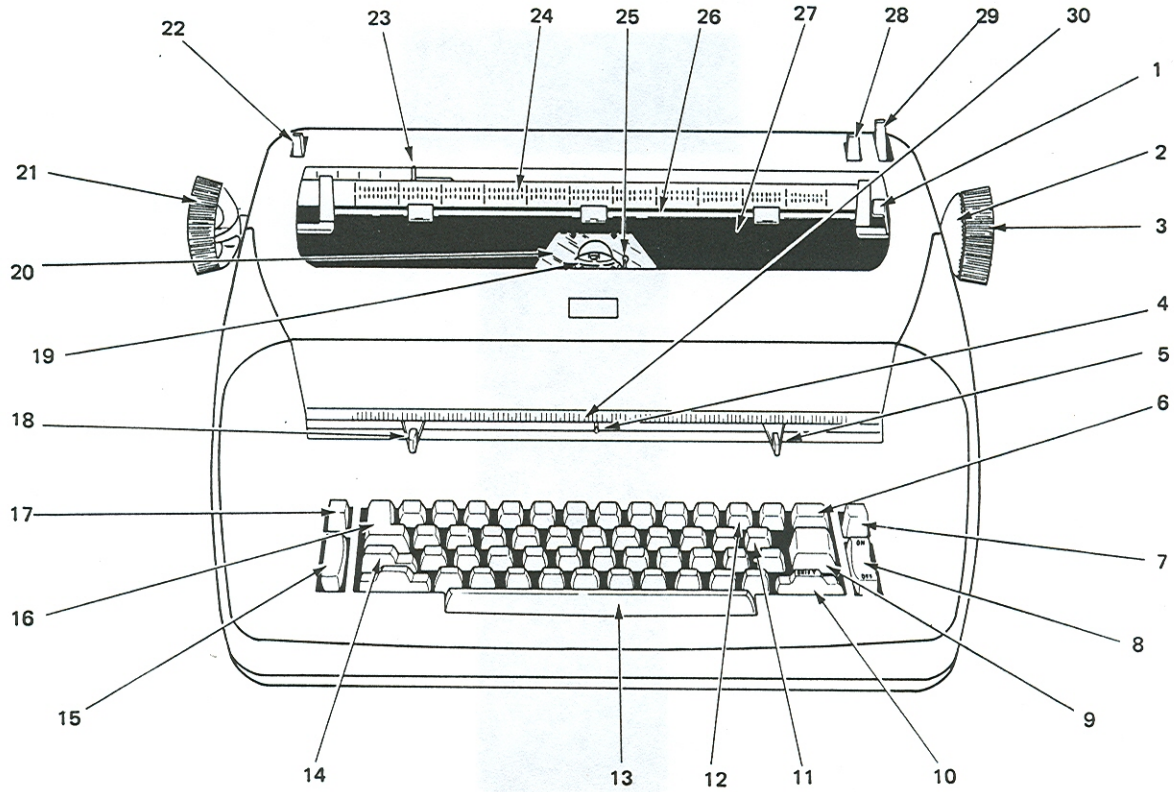

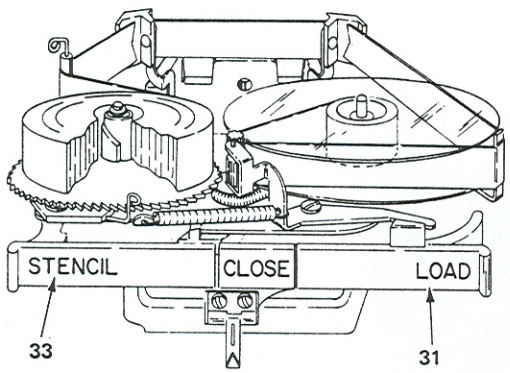

Film Ribbon

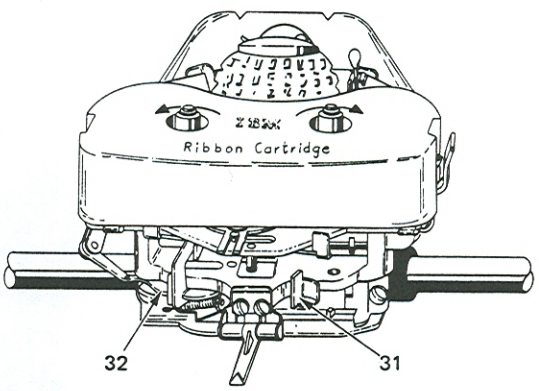

Fabric Ribbon

1. Detent Release Lever
2. Page End Indicator
3. Platen Knob
4. Position Indicator (Carrier Pointer)
5. Right Margin Stop
6. Backspace Key
7. Index Key
8. On/Off Switch
9. Carrier Return Key
10. Shift Key
11. Multiple Character Key
12. Hyphen/Underscore Key
13. Spacebar
14. Shift Lock
15. Tab Set And Clear
16. Tab Key
17. Margin Release Lever
18. Left Margin Stop
19. Typing Element (Typehead)
20. Clear View Cardholder
21. Platen Variable
22. Multiple Copy Control Lever
23. Paper Guide
24. Copy Guide Scale
25. Impression Control Lever
26. Paper Bail
27. Platen
28. Line Space Lever
29. Paper Release Lever
30. Front Scale
31. Ribbon Load Lever
32. Ribbon Lift Lever
33. Stencil Control

OPERATOR CONTROLS

1. *Visual Inspection* – Look at the machine carefully for loose, damaged or missing parts. Also look for foreign material in the machine: pencils, erasers, paper clips, etc. Before starting the functional check, note the present settings of the operator controls. The controls should be returned to these settings at the end of the functional check.

2. *On-Off Switch* – Operate the on-off switch (8) several times. Switch action should be positive and the machine should reliably turn on and off.

   Turn the switch off. Try to depress all of the character keybuttons. All characters except the hyphen/ underscore (12) should be locked. No character should print when the machine is turned back on.

   Turn the switch on and unplug the machine. Depress all functional keys: tab (16), shift (10), spacebar (13), backspace (6), and carrier return (9). Plug the machine in. The machine should start reliably under this load.

3. *Paper Insertion* – Roll a single piece of paper into your machine. It should not wrinkle or be damaged.

4. *Paper Release* – Pull the paper bail (26) forward. Notice that the feed rolls still hold the paper tightly. Now, pull the paper release lever (29) forward. You should be able to easily position the paper left and right.

5. *Multiple Copy Control Lever* – Operate the multiple copy control lever (22) while observing the platen (27). The platen should move front and rear. The lever should not bind in any position. Return the lever all the way forward.

6. *Detent Release* – Push the detent release lever (1) down. The platen should rotate freely. Push the detent release lever up. The platen should now be positively locked in position by the detent.

7. *Platen Variable* – Push in on the left platen knob (21). The platen should turn freely. Be sure the ratchet on the right side of the platen does not turn. When the knob is released, it should restore reliably.

8. *Margin Set* – Position the carrier at 30. Move the left margin (18) to the right until it lines up with the carrier pointer (4). Operate the carrier return. The margin should remain at 30. Type over to the right margin (5). The bell should ring 10-12 spaces before the carrier reaches the right margin. When the carrier pointer reaches the right margin, the character keys should lock.

9. *Margin Release* – Set the left margin at 25. Carrier return to the left margin. Depress and release the margin release lever (17). Operate the carrier return again. The carrier should move to the far left. Now type from zero to position 30. You should be able to type through the left margin.

CARRIER MOVEMENT

1. *Spacebar* – Return the carrier to the left margin. Check the spacebar by first typing a series of lowercase "n's" separated by a space. Then, return to the margin, roll back to the same writing line and substitute a space for the "n's" and the letter "x" for the space. You should have a line of alternate "n's" and "x's" evenly spaced.

   Check to see that the spacebar repeats when slight additional pressure is applied to the keybutton. Starting at position zero, hold the spacebar in a repeat operation as you observe the carrier move to the right limit. The speed of the carrier should remain constant across the writing line.

2. *Backspace* – Turn the paper to the horizontal position and place it in the machine. Move the carrier to position 115 on the front scale. Type a series of 10 "h's" and "n's" (hnhnhn). Backspace 10 spaces and retype the same characters. The characters should overlap each other.

   Also, perform this check with the carrier positioned at 10 and 60 on the front scale.

   Check to see that the backspace mechanism repeats when slight additional pressure is applied to the keybutton.

3. *Carrier Return* – Operate the return key (9) with the carrier positioned two, three and four inches from the left margin. Check for reliable single and double line space during this operation.

   Check to see that only the index part of the carrier return operation is repeated when slight additional pressure is applied to the keybutton.

4. *Index* – Operate the index key (7). Check for reliable single and repeat operation. The carrier should not move during an index operation.

5. *Tab* – Clear all tab stops (15). Now set tabs at 55, 56, 88 and 90. Operate the tab and check to see that the carrier stops exactly at 55, 56, 88 and 90. Make this check several times.

   Now tab all the way to the right. Hold down the tab clear keybutton and operate the carrier return. All the set tab stops should clear automatically without excessive noise.

PRINT QUALITY

1. *Strikeup* – Set the impression control lever (25) at three. Type all the characters on the keyboard using the following procedure: type one character, then an "H"; another character and an "H," etc., until you have typed every character in upper and lowercase. Do this several times. First, depress the keybuttons very slowly and evenly, then type fast. Remember, every operator types differently. You should meet the following conditions, no matter how you type.

   a. All keys should have printed the correct character.

   b. All characters should have even color.

   c. No characters should type out of position.

   d. There should be even spacing between characters with no overlap.

   e. All keybuttons should move down easily and the correct character should print before the keybutton bottoms.

2. *Repeat Characters* – Lightly depress the hyphen/underscore keybutton. The character should print only one time when the keybutton is depressed. The character should repeat when more pressure is applied. You should not be able to stop the repeat operation by pushing down hard on the keybutton.

3. *Impression Control* – Type a letter character with the impression control lever at one and at five. You should hear a difference in the sound of the typehead (19) hitting the paper. Return the impression control lever to three.

4. *Line Spacing* – Type several lines of underscores in both line space lever (28) positions. The space between the typed lines should be even for both line space lever positions.

5. *Scales* – Type a line of uppercase "V's." The horizontal line on the cardholder (20) should be parallel to the line of "V's."

   The points of the "V's" should line up with the vertical lines on the cardholder.

   Set the left margin as far to the left as it will go. Operate the carrier return. The pointer should line up with zero on the front scale (30).

6. Type alternate upper and lowercase "Z's." The characters should print properly with even spacing.

   Slowly depress the shift lock (14). The button should lock down just as or slightly after a shift occurs.

   Lock the shift in uppercase and type a full line of underscores. The lock should not release by vibration.

   The shift should unlock when either shift button is lightly depressed.

7. *Film Ribbon Operation* – Look at the ribbon and the typed characters below. The pattern on the ribbon should look similar to this.

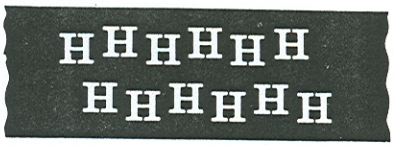

   There should be neither character overlap on the ribbon nor voids (white spaces) on the printed characters. Depress the stencil control (33) and type a few underscores. The ribbon should not feed and the underscore should miss the ribbon. Return the stencil control to its normal position.

8. *Fabric Ribbon Operation* – Type a series of underscores with the impression control lever set on five and the ribbon lift lever (32) in the high lift position. Look at the position the underscore printed on the ribbon. It should be near the bottom and all underscores should print on the ribbon. If a black and red ribbon is used, all characters must print black when the ribbon lift lever is in the low lift position. All characters must print red when the lift lever is in the stencil position. When the lift lever is in the stencil position, the underscore must not print on the top of the ribbon.

   Remove the ribbon cartridge. Depress the repeat underscore and note which ribbon feed ratchet is rotating. Turn the other feed ratchet in the same direction while depressing the repeat underscore. The ribbon mechanism must reverse and drive the opposite spool. Repeat the procedure for the other spool.

   Reset the margins and tab stops as they were when you started. This completes the detailed function check.

ICTIONAL CHECK – IBM "SELECTRIC" II TYPEWRITER

s functional check is designed to check the additional tures found on the IBM "Selectric"II Typewriter. Refer the IBM "Selectric" Typewriter functional check for ner machine functions.

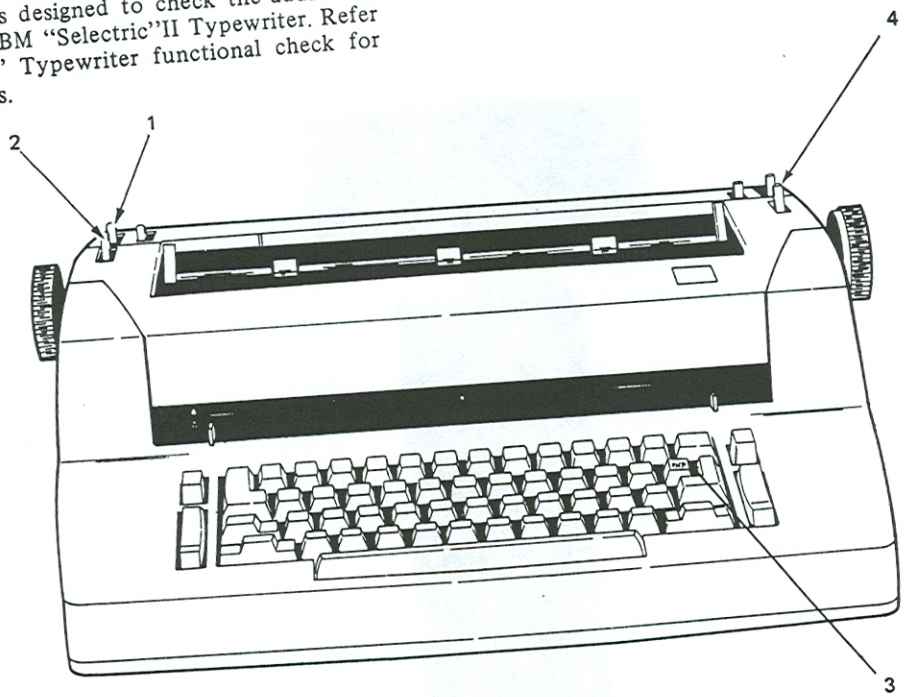

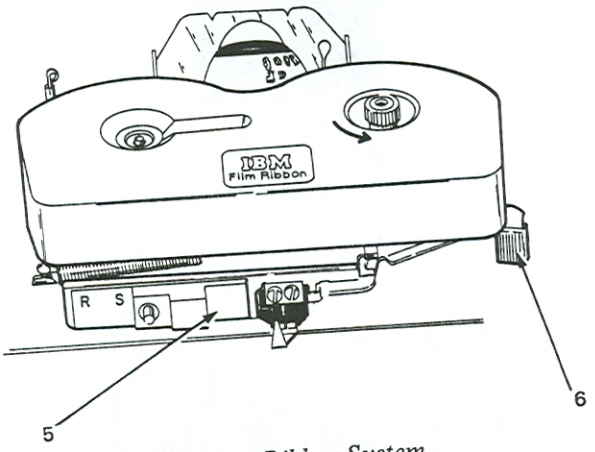

Selective Ribbon System

1. Switch Pitch Lever
2. Half Backspace Lever
3. Express Backspace Keybutton
4. Detent Release Lever
5. Stencil Lever
6. Ribbon Load Lever

OPERATOR CONTROLS

1. *Switch Pitch Lever* – The switch pitch lever changes the pitch of the machine between the 10 pitch mode and the 12 pitch mode.

2. *Half Backspace Lever* – The half backspace lever moves the carrier one half backspace to the left when the lever is held forward.

3. *Express Backspace Keybutton* – The express backspace keybutton moves the carrier quickly to the left when the keybutton is held depressed.

4. *Detent Release Lever* – This control performs the same function as on the "Selectric" Typewriter; just its location is changed.

5. *Stencil Lever* – The stencil lever is moved right-to-left to place the ribbon mechanism in the ribbon or stencil mode.

6. *Ribbon Load Lever* – The ribbon load lever raises the ribbon lift guides and prepare the ribbon mechanism for changing the ribbon.

SWITCH PITCH/HALF BACKSPACE

1. Place the switch pitch lever in the 10 pitch mode (to the rear). With the margin set at zero, carrier return and type a row of letter "l's" about two inches long.

2. Pull the switch pitch lever forward to the 12 pitch mode. Carrier return and type another row below the previous one. The machine changed pitch if the second row of characters does not align with the first row.

3. Return the machine to the 10 pitch mode and type a series of slashes (/). Backspace to the beginning of the slashes; then pull the half backspace lever forward.

4. While holding the lever forward, type another series of slashes. This series of slashes should be evenly spaced between previously typed slashes.

DUAL PITCH TAB/ESCAPEMENT

1. Install a sheet of paper. Clear all tab stops and reset tabs at several locations across the writing line. Operate the tab from the margin and type a character at each stop. Repeat this procedure for three lines. The characters should line up in straight vertical columns.

   Clear the tab stops and change pitch. Make the same check again after changing the pitch.

2. Now, tab all the way to the right. Hold down the tab clear keybutton and operate the carrier return. All the set tab stops should clear automatically without excessive noise.

3. With the carrier at the far right, depress the carrier return, then depress the tab. The tab operation should immediately override the carrier return.

4. With the carrier at the far left and all tab stops cleared, depress the tab, then carrier return. The carrier return should immediately override the tab.

ROTARY BACKSPACE/EXPRESS BACKSPACE

1. Turn the paper to the horizontal position and place it in your machine. Then, starting with the carrier at the left, type a row of "h's" and "n's" (hnhnhn) for a total of 10 characters. Now, backspace 10 spaces and type over. The characters should overlay each other. Make the check in both 10 pitch and 12 pitch mode.

2. Also check the backspace in a similar way with the carrier positioned in the center and toward the right of the writing line.

3. Check to see that the backspace mechanism repeats when slight additional pressure is applied to the keybutton.

4. Depress the express backspace keybutton. The carrier should move to the left as long as the keybutton is held depressed.

SELECTIVE RIBBON SYSTEM

1. Put a single sheet of bond paper in your machine. With the multiple copy control lever forward and the impression control lever on three, type all of the characters in upper and lowercase.

2. Inspect the copy for even color density of all the characters.

3. Inspect the copy for ribbon flaking; that is, ribbon particles on the copy.

4. With a film ribbon installed, the lift pattern should look like this example:



   Inspect the ribbon pattern on the machine. The characters should not overlap one another and the characters should be positioned on the ribbon with a margin of safety at the top and bottom.

   With a Tech III ribbon installed on the machine, inspect the ribbon pattern. The characters should overlap one another and there should be a margin of safety at the top and bottom of the ribbon. Type several lines of underscores. The typing must not fade.

5. Inspect the ribbon around the path at the various guides and rollers. There should be no wrinkles in the ribbon.

6. Finally, place the stencil control lever in the stencil position and type several characters. The ribbon should not feed or lift.

FUNCTIONAL CHECK-IBM CORRECTING "SELECTRIC"II TYPEWRITER

This functional check is designed to check the correcting mechanism on the IBM Correcting "Selectric" Typewriter.

Refer to the IBM "Selectric" Typewriter or "Selectric" II Typewriter functional checks for other machine functions.

1. Type several characters, then depress the correcting keybutton. The carrier should backspace one time.

2. Retype the last character typed. The image must be completely removed from the paper or covered up, according to the type of correcting tape used, and the carrier must not escape.

3. Type another character. It should be in the same position as the original character and the carrier should escape normally.

4. Type several characters. Normal print and escapement should begin again.

5. Perform steps one through four again. The correcting tape should feed enough so that the characters on the correcting tape do not overlap.

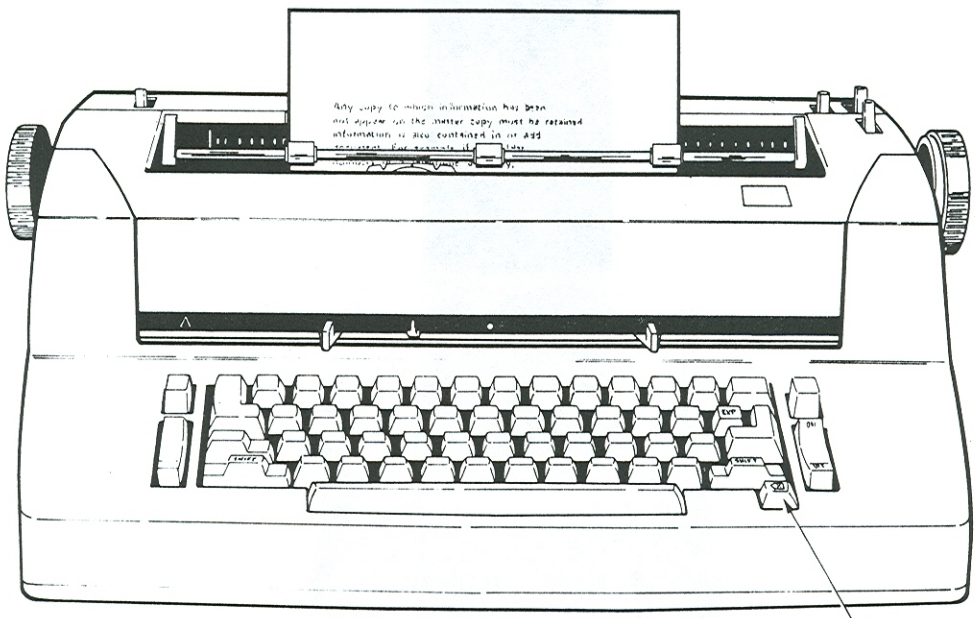

MOTOR AND DRIVE OPERATIONAL THEORY

The motor and drive mechanism (Figure 1) supplies power to drive the cycle shaft and the operational shaft. These two shafts provide the motion through various cams and gears to operate the mechanisms within the "Selectric" Typewriter.

The machine uses a shaded pole motor with a centrifugal clutch to drive the motor pulley. The pulley and drive belt provide drive to the cycle clutch hub, which in turn drives the operational shaft and cycle shaft.

CAPACITOR START MOTOR

Early level machines were equipped with a capacitor start motor. The capacitor gives the motor starting direction and torque. Refer to Early Level Drive this section.

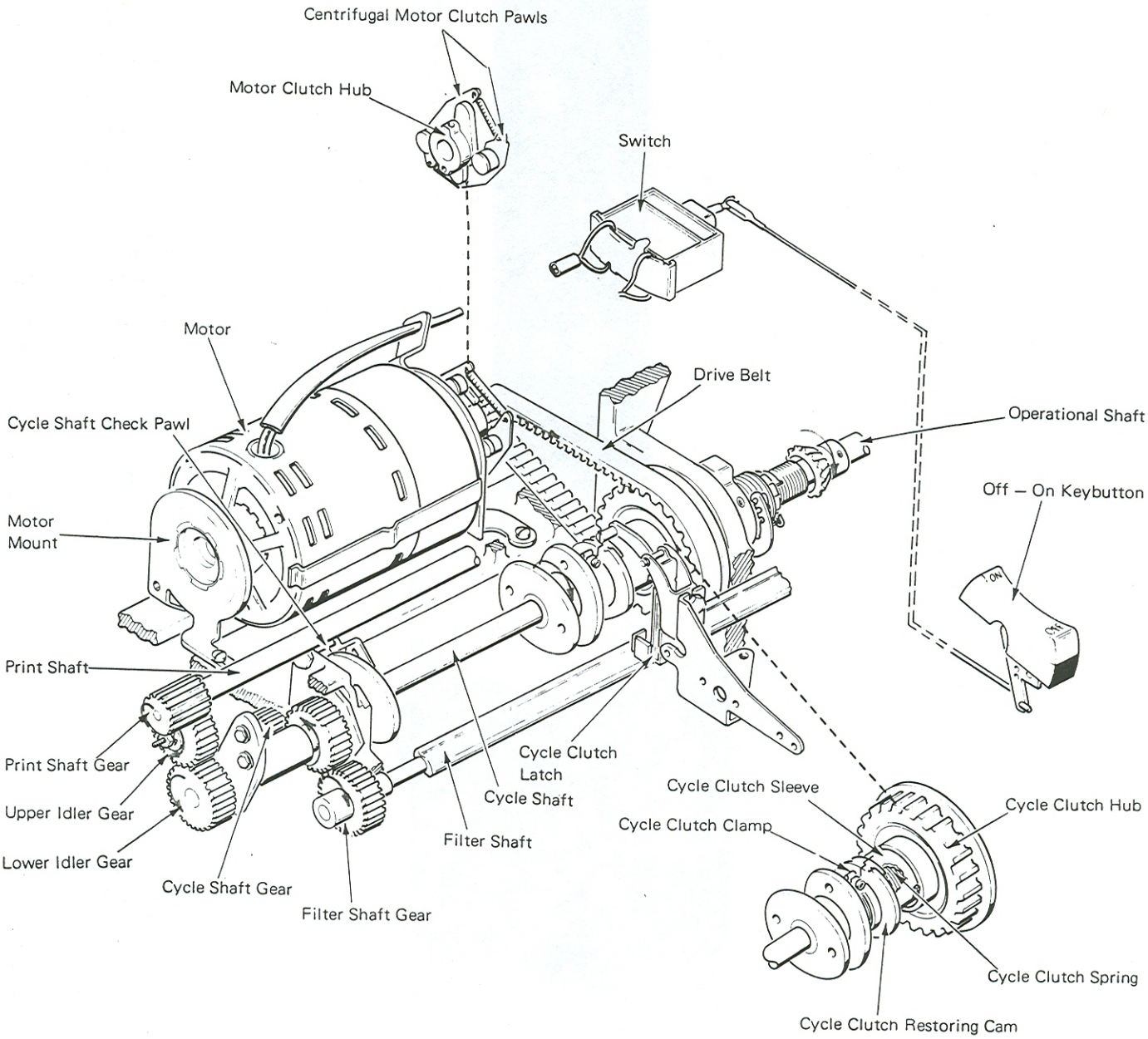

Figure 1 – Drive Mechanism

MOTOR CLUTCH

Due to the low starting torque of the shaded pole motor, a motor pulley clutch (Figure 2) is used. The clutch allows the motor to reach operating speed before it engages the load.

A clutch pulley hub is attached to the shaft of the motor just to the left of the motor pulley. Two clutch pawls pivot on the clutch pulley hub (Figure 2). When the motor is OFF, the pawls are spring loaded against stop lugs on the hub. When the motor is turned ON, centrifugal force causes the clutch pawls to pivot on the hub so the tip of one of the two pawls will engage a tooth on the motor pulley. The pulley will then rotate with the hub and provide drive to the machine.

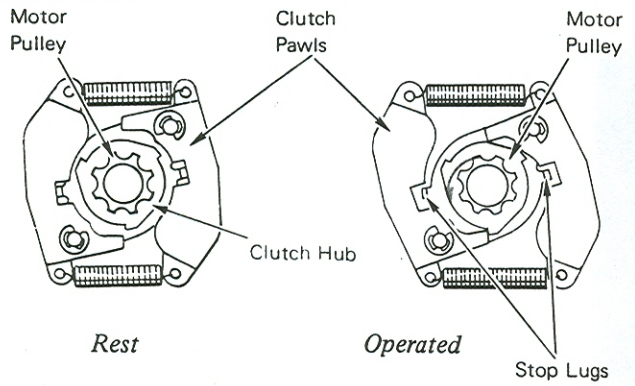

Figure 2 – Motor Clutch (Right Side View)

A plastic bushing is placed on the motor shaft inside the motor pulley (Figure 3). The purpose of the bushing is to keep the motor pulley from sticking to the motor shaft and causing the motor to fail to start.

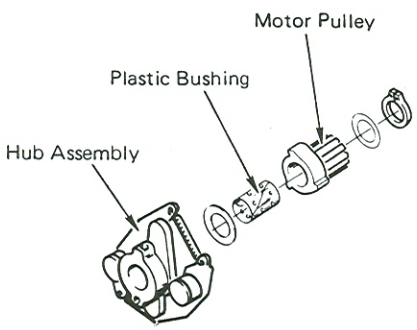

Figure 3 – Motor Pulley

OPERATIONAL SHAFT DRIVE

The cycle clutch pulley is molded to a hub and is continuously rotating within a bronze bearing in the center of the power frame (Figure 4). Two shafts extend into, and are supported by the hub on each side of the cycle clutch pulley. The shaft on the right is called the operational cam shaft. This shaft is in constant rotation with the cycle clutch hub. All powered functional operations are driven by this shaft. The driving connection between the cycle clutch pulley hub and the operational shaft is made by two extensions of the pulley hub that fit into the left side of the torque limiter hub. The level 1 torque limiter hub has two nylon inserts that fit into the torque limiter hub, around the extensions of the cycle clutch pulley hub. These inserts are used to provide a quiet driving connection between the two hubs (Figure 4).

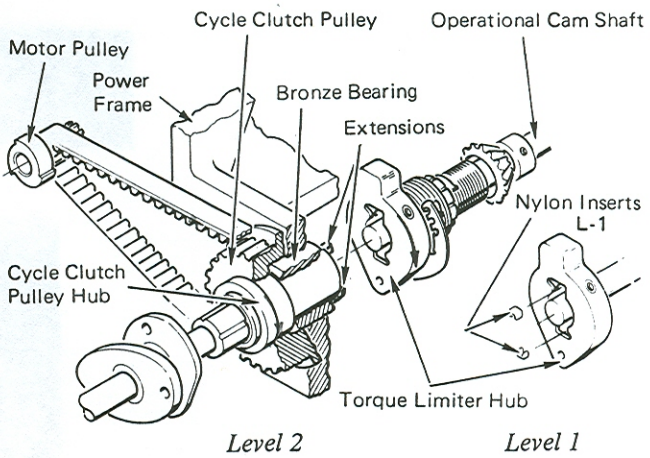

Figure 4 – Operational Cam Shaft Drive Connection

The shaft to the left of the cycle clutch pulley hub is the cycle shaft (Figure 5). The cycle shaft is driven by a spring clutch and only turns when a letter keylever is depressed. The shaft rotates 180 degrees for each character cycle. After 180 degrees rotation, the spring clutch is disengaged and the shaft stops turning.

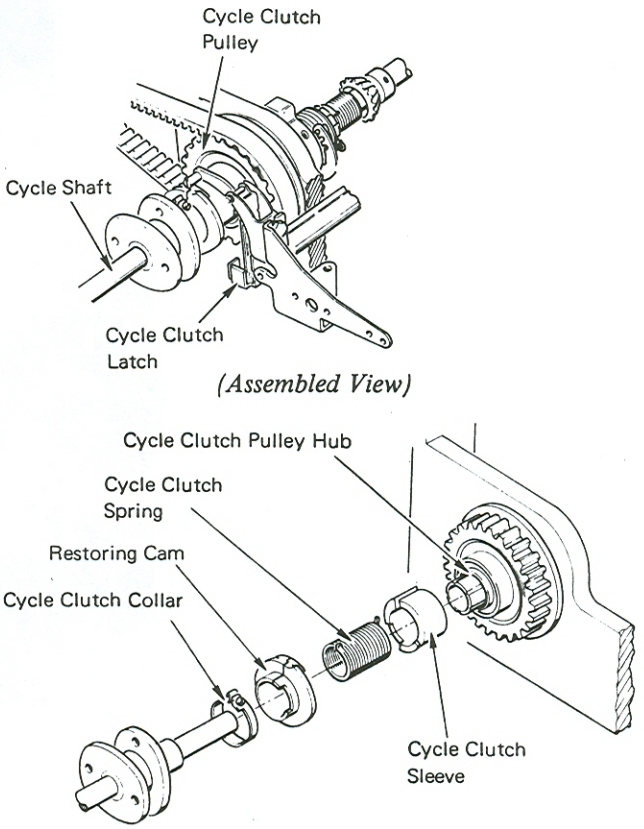

Figure 5 – Cycle Clutch (Exploded View)

CYCLE CLUTCH

The cycle clutch spring provides the driving connection between the cycle clutch pulley and the cycle shaft (Figure 6). Expanding and releasing the spring controls the starting and stopping of the cycle shaft. The left end of the spring fits on the cycle shaft and is attached to the shaft by the cycle clutch sleeve, which is an adjustable clamp. The right end of the spring fits over the driving arbor of the cycle clutch pulley. The inside diameter of the spring is smaller than the driving arbor when the spring is at rest. Therefore, when the arbor turns, top to front, the spring grips the arbor and turns with it. This action causes the spring to turn the cycle shaft also.

The cycle clutch sleeeve fits over the right end of the cycle clutch spring. A lug on the right end of the spring is turned up and fits into a notch on the right side of the sleeve. When the cycle clutch sleeve is stopped, the right end of the spring is stopped.

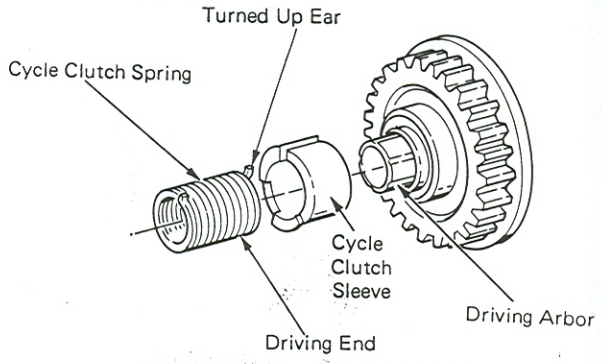

Figure 6 – Cycle Clutch Spring

The cycle clutch sleeve has two latching surfaces 180 degrees apart (Figure 7). As the cycle shaft and clutch spring rotate, one of the latch surfaces will contact the cycle clutch latch after 180 degrees of rotation. This will stop the cycle clutch sleeve.

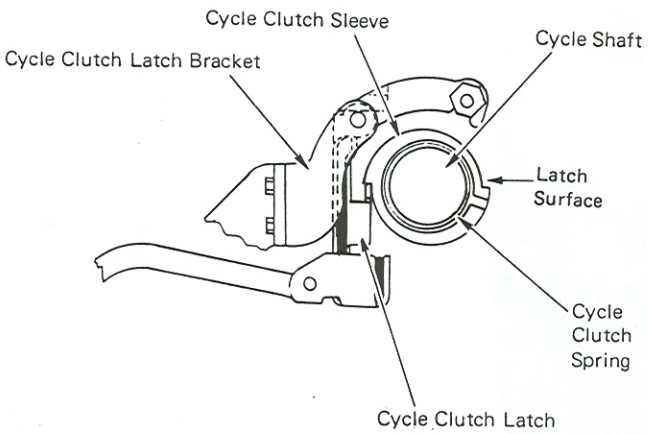

Figure 7 – Cycle Clutch Latch (Right Side View)

The cycle shaft will continue turning after the sleeve has been stopped. This continued turning of the shaft causes the left end of the spring clutch to turn, which unwinds or expands the spring. As the spring expands, the driving connection between the hub and the spring is broken. A latching surface is mounted on the left end of the cycle shaft (Figure 8). After the cycle shaft driving connection with the hub is broken and the clutch spring is expanded, the shaft continues rotating until the cycle clutch check pawl engages one of the latch surfaces on the cycle shaft. The clutch spring is then held in an unwound condition and the cycle shaft is at rest.

When another cycle is desired, the cycle clutch latch is pulled free of the sleeve. This will allow the right end of the cycle clutch spring to wind up, contact the hub and go through another cycle. When the step on the opposite side of the sleeve engages the cycle clutch latch, the right end of the spring will be stopped and the cycle shaft will overthrow and the check pawl will drop in. This completes another 180 degree cycle of the cycle shaft.

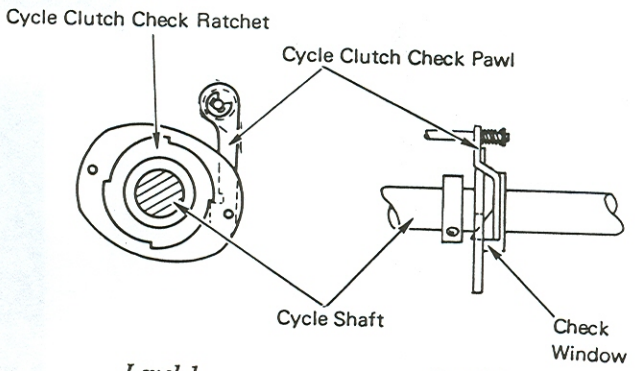

Figure 8 – Cycle Clutch Check Pawl

GEAR TRAIN

The cycle shaft gear (Figure 9) is attached to the end of the cycle shaft and drives the lower and upper idler gears. The idler gears in turn supply motion to the filter shaft and print shaft gears. The filter shaft supplies motion to the keyboard and the print shaft supplies motion to the carrier during each print cycle.

The filter shaft operates the character selection mechanism, the print escapement mechanism, the shift interlock and a spacebar interlock. The print shaft operates the print mechanism, fine alignment mechanism, and the ribbon feed and lift mechanisms.

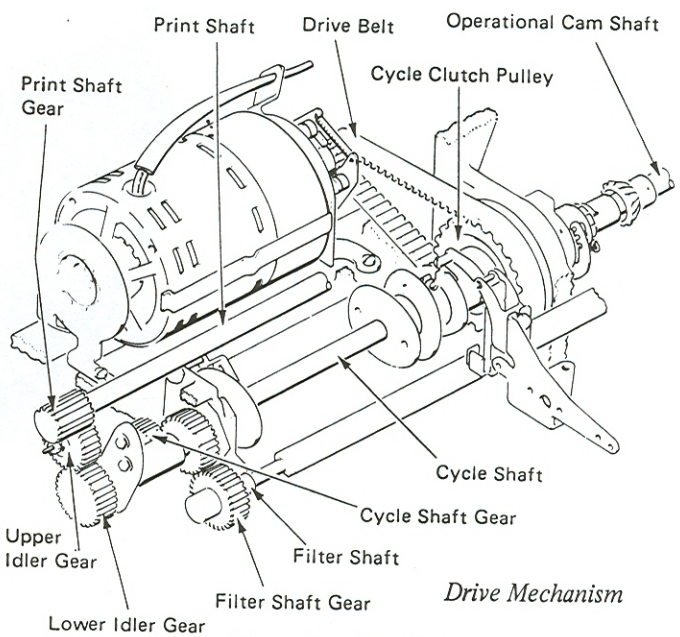

Figure 9 – Gear Train

MOTOR

The motor used in the "Selectric" Typewriter is a 3" shaded pole, induction type motor that normally requires 115 volts, 60 Hz. The motor is mounted at the left rear of the machine with the pulley toward the right. Rubber motor mounts in adjustable brackets support the motor at each end (Figure 10).

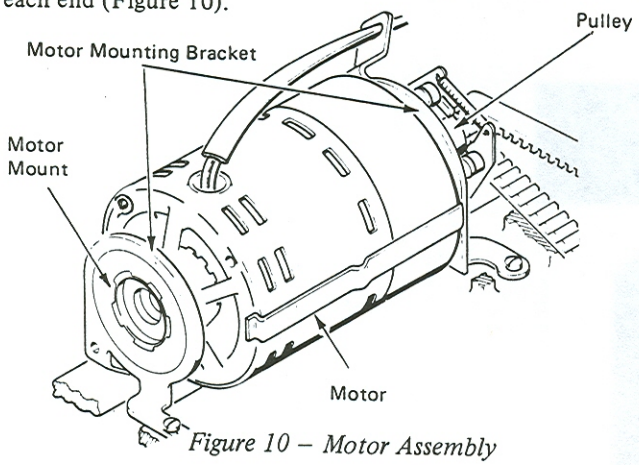

Figure 10 – Motor Assembly

MOTOR WIRING

On grounded 3-wire machines, grounding wires must be connected as shown. On 2-wire machines with capacitor motors, the capacitor must be insulated from the machine frame. Early level machines have a single pole switch (Figure 11).

WORLD TRADE DIAGRAMS SHOWN IN FIGURE 12 & 13

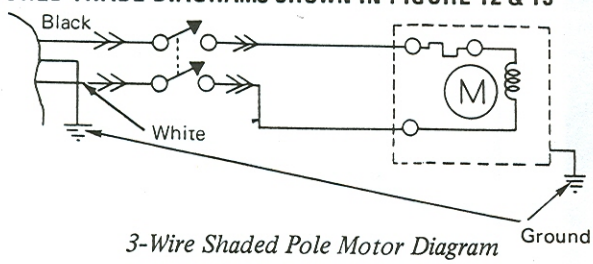

3-Wire Shaded Pole Motor Diagram

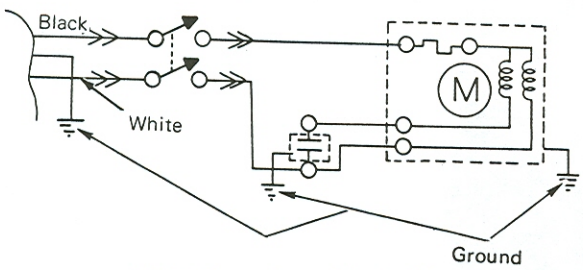

3-Wire Capacitor – Motor Diagram

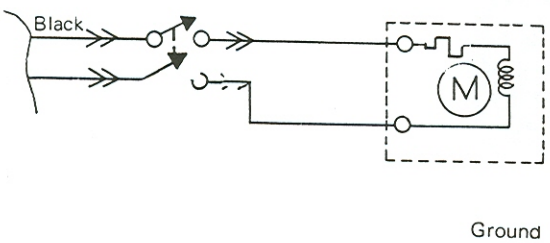

Double Insulated Shaded Pole Motor Diagram

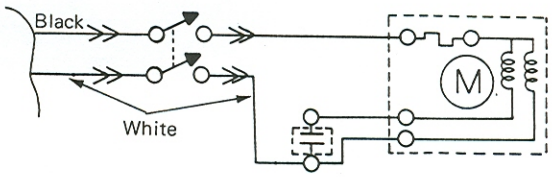

Double Insulated Or Early Level 2-Wire Capactior With Single Pole Switch – Motor Diagram

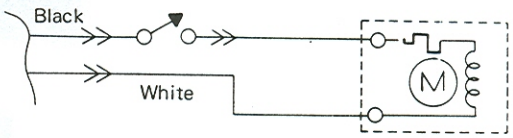

2-Wire Shade Pole Motor Diagram (Single Pole Switch, Early Level)

Figure 11 – Wiring Diagrams

220V Motor

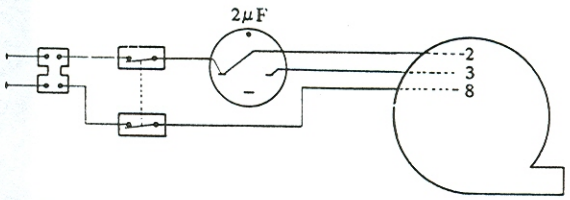

110/220V Motor Connected for 110V
120/240V Motor Connected for 120V

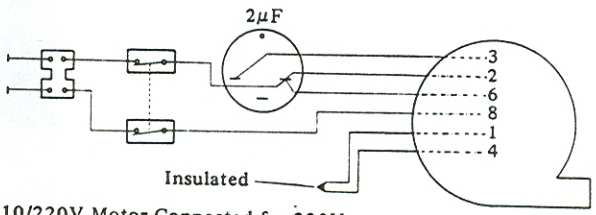

110/220V Motor Connected for 220V
120/240V Motor Connected for 240V

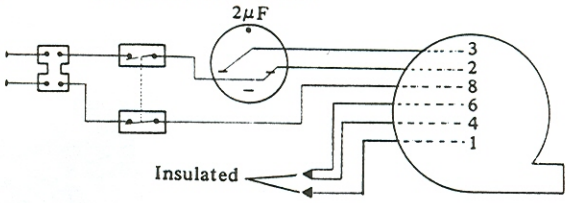

110/220V & 120/240V Motors with bi-voltage Switch

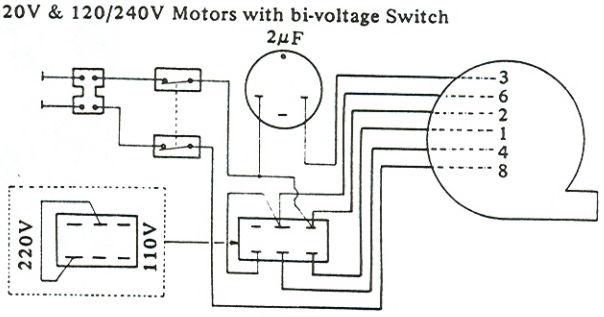

NO.	COLOR	NO.	COLOR
1	White	5	Gray Or Transparent
2	Red	6	Blue
3	Yellow	7	Violet
4	Brown	8	Black

Figure 12 – W.T. Wiring Diagrams

WORLD TRADE

220V Motor

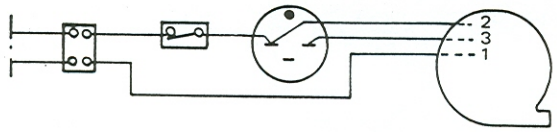

220V Motor

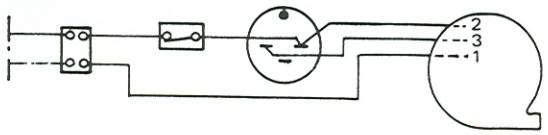

240V Motor (U.K.)

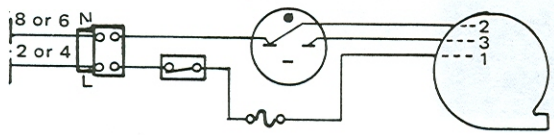

240V Motor (U.K.)

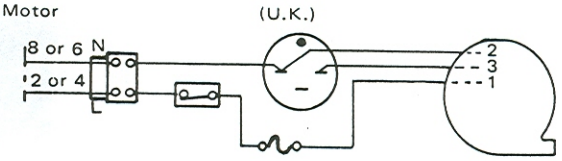

110V Motor

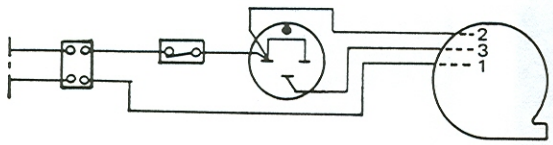

110V Motor

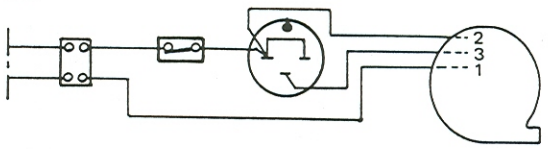

110/220V Motor connected for 220V
120/240V Motor connected for 240V

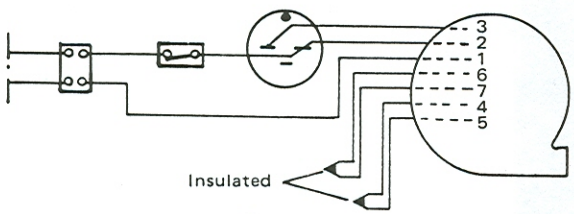

110/220V Motor connected for 220V
120/240V Motor connected for 240V

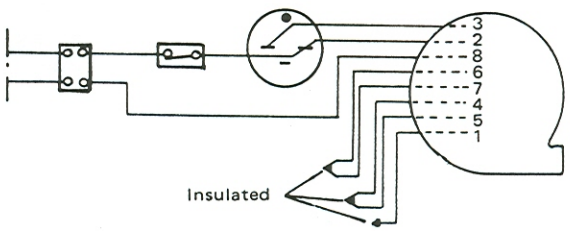

110/220V Motor connected for 110V
120/240V Motor connected for 120V

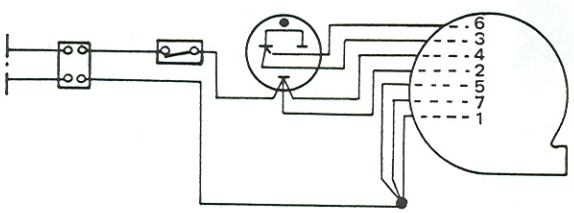

110/220V Motor connected for 110V
120/240V Motor connected for 120V

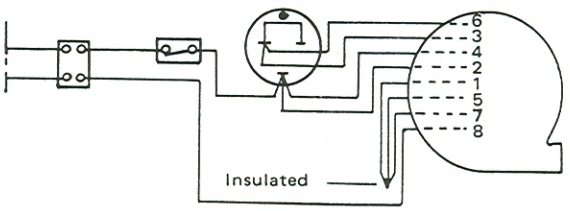

110/220V & 120/240V Motors with bi-voltage Switch

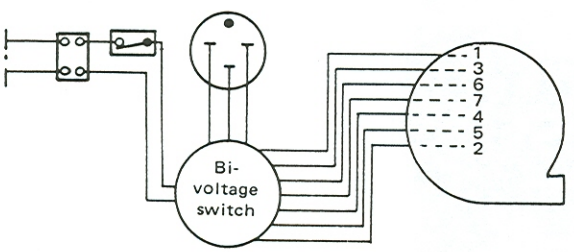

110/220V & 120/240V Motors with bi-voltage Switch

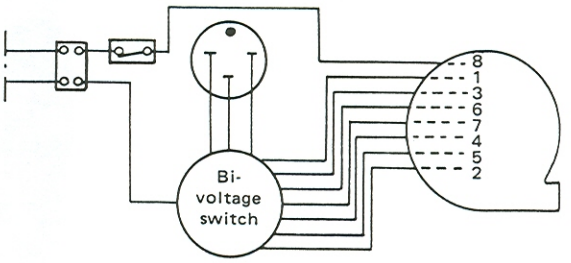

* THERMAL CUTOUT CANNOT BE REPAIRED/REPLACED.

NO.	COLOR	NO.	COLOR
1	White	5	Gray or Transparent
2	Red	6	Blue
3	Yellow	7	Violet
4	Brown	8	Black

Figure 13 – W.T. Wiring Diagrams

EARLY LEVEL MOTOR

In the early level machines, a capacitor type motor is used. A capacitor, in the start winding circuit, provides a starting torque for the motor and controls the direction of rotation. The capacitor also remains in the circuit while the motor is running. The capacitor is mounted in a vertical position by a bracket at the rear corner of the machine (Figure 14).

In ungrounded systems, the capacitor is isolated from the power frame by an insulator and nylon mounting screws. The motor is insulated from the power frame by the rubber mounting. To change an ungrounded system to a grounded one, three steps must be taken:

1. The two-wire line cord must be replaced with a three-wire cord and the ground lead must be attached to the power frame at the cord clip.
2. A short jumper wire must be connected from the motor to the power frame.
3. The capacitor must be grounded to the power frame by replacing the nylon mounting screws with metal screws and removing the insulating material from between the capacitor and the frame of the machine.

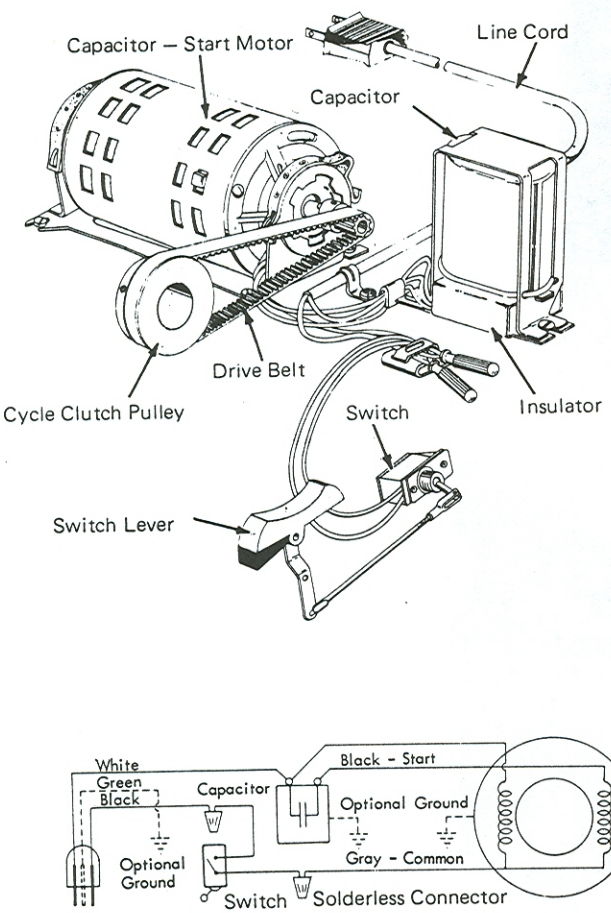

Figure 14 – Early Capacitor Motor

MOTOR AND DRIVE ADJUSTMENTS

1. *Cycle Shaft End Play* – Adjust the collar on the shaft for .001"-.006" (0.03-0.15 mm) end play of the cycle shaft.

   CAUTION: The slight end play of the cycle shaft ensures that it will rotate freely. Excessive play could allow a coil of the cycle clutch spring to bind between the two hub parts of the clutch causing the machine to become locked.

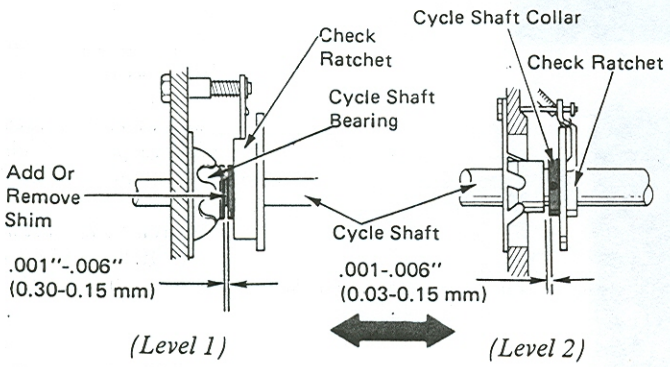

(Level 1) *(Level 2)*

2. *Gear Train Backlash* – Adjust the upper and lower idler gears for minimum backlash between the gears. The mechanism must be free of binds during the 360 degrees rotation of the gears. Minimum backlash is necessary to ensure minimum overthrow of the driven shafts. The lower idler gear must be adjusted first because the upper idler gear is adjusted to the final position of the lower gear.

   NOTE: Filter shaft and print shaft timing must be checked after making this adjustment.

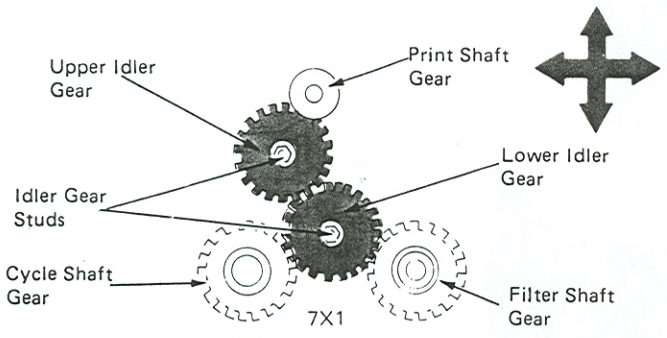

(Left Side View)

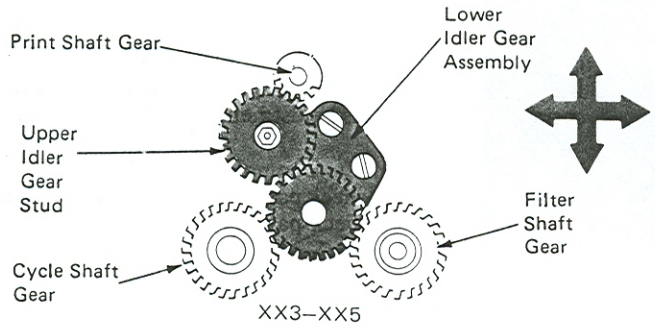

(Left Side View)

3. *Cycle Clutch Latch Bracket* – Adjust the bracket vertically so the Hooverometer, set on the No. 3 line, just reaches the distance between the print shaft and the cycle latch pivot pin.

   NOTE: Recheck the cycle clutch latch restoring adjustment after changing this adjustment.

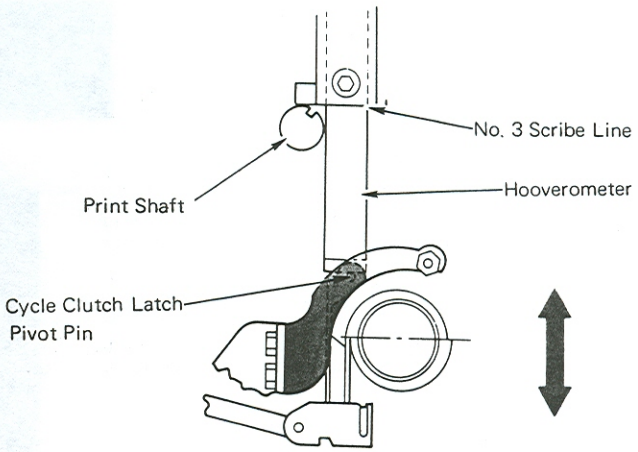

(Right Side View)

4. *Cycle Clutch* – Adjust the cycle clutch to satisfy the following conditions:

   a. Loosen the cycle clutch collar and position the spring to clear the edge of the cycle clutch hub by .004"-.012" (0.10-0.30 mm).

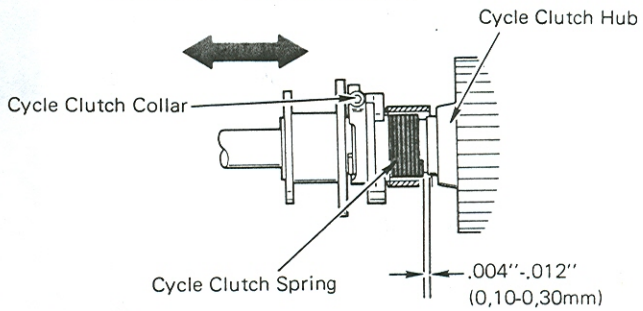

   NOTE: The cycle clutch spring must be installed with the longer lug to the left.

   b. Position the collar left-to-right for .010"-.015" (0.25-0.38 mm) end play of the sleeve.

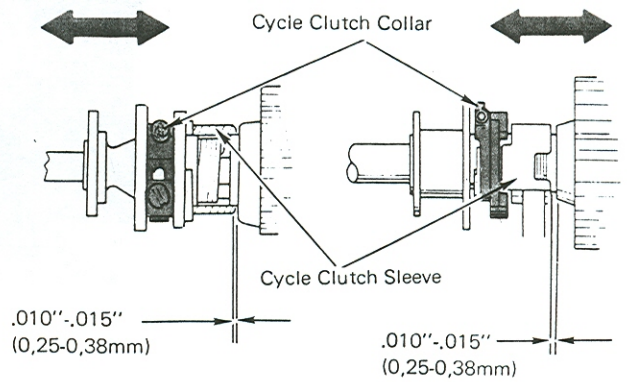

Levels 1 & 2 *Level 3*

Continued On Next Page

c. When a zero tilt, negative five rotate character is hand cycled, adjust the collar and spring rotationally so the cycle clutch spring will begin to slip when the print shaft is 1/2-1 tooth from the rest position.

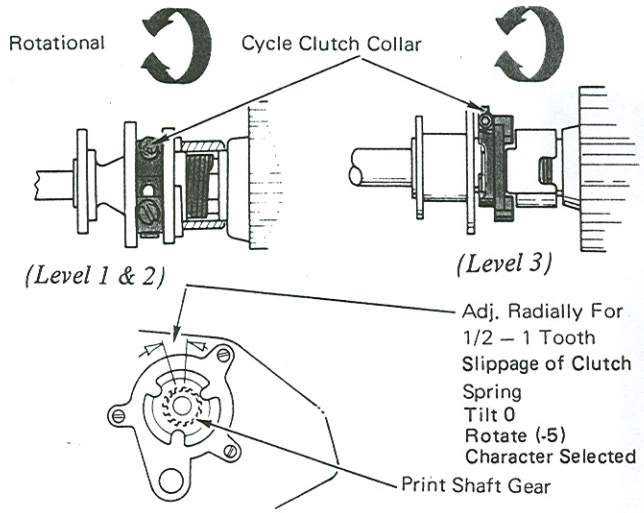

d. Position the overthrow stop so it will allow the cycle shaft to overthrow the latched position by .007"-.015" (0.18-0.38 mm).

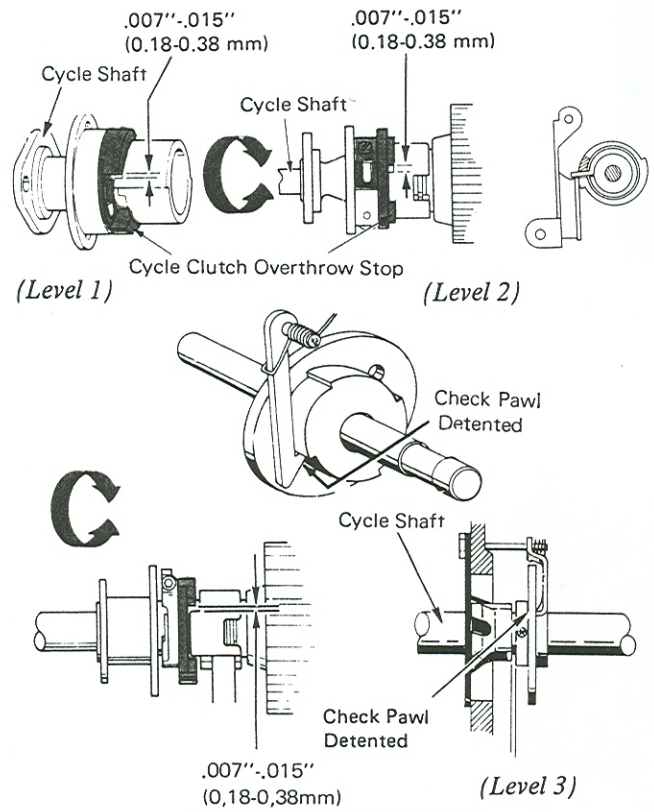

NOTE: This adjustment on Level 3 machines must be made with the cycle clutch released; then checked with the machine at rest, to prevent loss of the cycle clutch spring rotational adjustment.

CAUTION: When installing the modified cycle clutch spring, be sure the longest extension of the spring is to the left. If the spring is installed incorrectly, it is possible for the extension to hang up on the cycle clutch latch, keeping the cycle clutch from unlatching.

POWER ON ADJUSTMENT PROCEDURE

The cycle clutch adjustments may be made with the power on as described in the following procedure.

Pre-Conditions:
The cycle shaft, filter shaft and print shaft must be properly timed.

The gear train backlash must be correct.

The rest of the machine must be functional.

The right-hand shield must be in place while performing this power on adjustment. This will remove the danger of the splined wrench being thrown out of the machine due to the possibility of it contacting the turning torque limiter hub. Rotation of the cycle clutch pulley and drive belt does not present a hazard as there are no exposed parts which could throw the splined wrench out of the machine.

a. Turn machine on, position the cycle clutch collar screw up, then position the carrier into the RH margin to lock the keyboard which will prevent cycling of the cycle shaft.

b. Insert the L shaped foot of the Hooverometer into the cycle clutch latch link to prevent unexpected cycling of the machine.

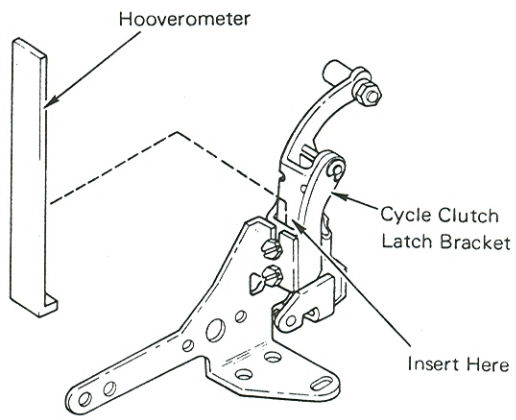

c. Loosen the cycle clutch clamp screw and advance print shaft (top-to-rear).

CAUTION: Do not operate the cycle clutch with the splined wrench in the clamp screw.

d. Check for .004"-.012" (0.10-0.30 mm) clearance between the right side of the spring and the edge of the cycle clutch hub. Expand the spring by pushing the LH side of the spring with a spring hook and move the spring laterally for this adjustment.

e. Rotate the print shaft a complete cycle (top-to-rear) until the cycle shaft check pawl drops in. Back the cycle shaft up against the check pawl.

f. Position the collar left-to-right for .010"-.015" (0.25-0.38 mm) end play of the sleeve.

g. Position the overthrow stop for .007"-.015" (0.18-0.38 mm) clearance and tighten the clamp screw.

This will give approximately 1/2 tooth of motion to "unwind" the spring from the rest position. Observe this motion at the print shaft gear by hand cycling a zero tilt, negative five character with the power off.

5. *Drive Belt* – Adjust the motor mounting brackets front-to-rear for a minimum amount of belt noise. The belt must not be loose enough to allow the belt to slip on the motor pulley. Check by operating the carrier return mechanism and holding the carrier while operating the shift mechanism at the same time. This loads the motor to a point where failure will be most probable.

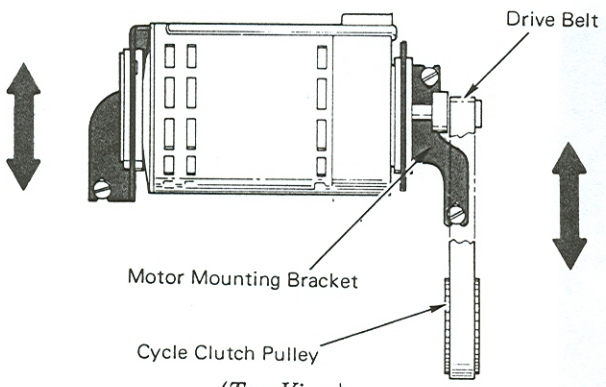

(Top View)

6. *Motor Pulley* – Adjust hub assembly and grip clip left-to-right so the belt runs fully on both pulleys. Maintain .008"-.015" (0.20-0.38 mm) pulley end play with grip clip.

NOTE: Make certain the plastic bushing is installed in the motor pulley.

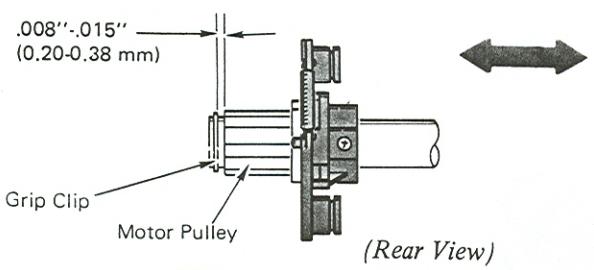

(Rear View)

7. *Motor Clutch Pawl Stop Lugs (Level 1 Only)* – Form the stop lugs on the clutch hub for a clearance of .010"-.020" (0.25-0.51 mm) between the tip of the clutch pawls and the pulley ratchet when the pulley is manually rotated.

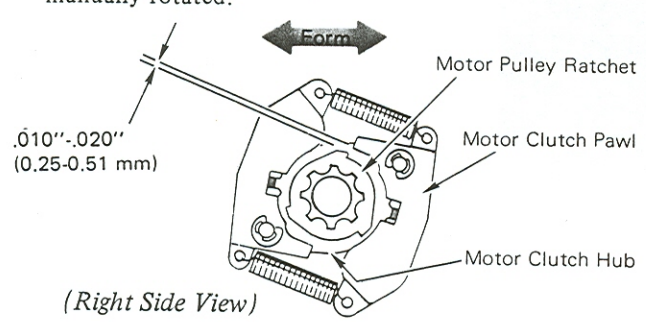

(Right Side View)

Level 1 Only (Metal Hub)

BLANK PAGE IN MANUAL FOR ADDING NOTES

KEYBOARD OPERATIONAL THEORY

The keyboard controls the selection of the particular character that will print. This is done through the use of keylevers, interposers and bails, which provide character selection and cycle clutch release (Figure 1). The keyboard is removable as a unit.

A keyboard lock mechanism, controlled by the on/off switch lever, is contained in the keyboard and will be described in this section.

All functional keylevers are described in their specific sections of this manual.

The keylevers pivot on a fulcrum rod at the rear. A guide comb holds and limits the vertical movement of the keylevers at the front. Keylever tension is supplied by flat leaf springs under the front of the keylevers. The forward end of each spring is formed so that the spring will remain under the keylever. Different spring tension is supplied to the four rows of character keylevers by auxiliary leaf springs under the keylever springs. The auxiliary leaf springs differ in length to make up the difference in tension between the four rows of keylevers. This difference in spring tension provides uniform operating force for all keylevers.

A keylever pawl is attached to each keylever by a shoulder rivet. This pawl is spring loaded and is in a position to contact the top of an interposer.

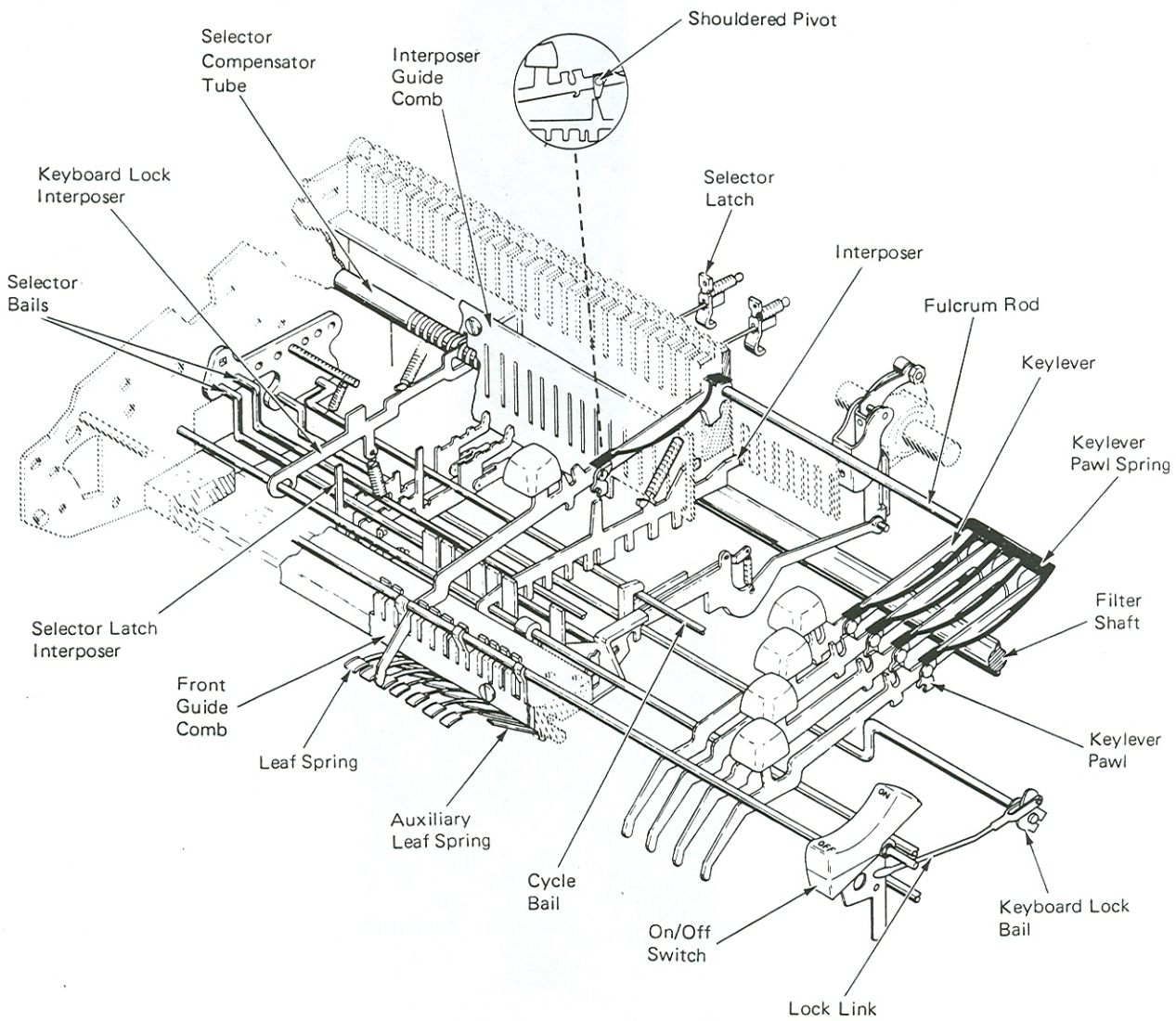

Figure 1 – Keyboard Mechanism

INTERPOSERS

Each character keylever has an interposer located just below it (Figure 2). The interposer is used to select the amount of tilt and rotate needed to bring the desired character on the typehead to the print position. The interposer pivots about a large fulcrum rod through an elongated slot at the front and is spring loaded up at the rear. The front and rear of the interposer is positioned laterally by guide combs. The interposers move vertically in the rear guide comb as well as front to rear.

The interposers have several lugs extending down from them (Figure 2). There are positions for eight lugs. Seven of these lugs are used for selection. The absence or presence of these lugs determines which of the selector bails will be operated. No two interposers are the same. The rear most lug is used for special applications of the machine. The wide lug in the center is common to all interposers. Its purpose is to release the cycle clutch when a keylever is depressed. Mounted directly below this lug is a cycle bail that pivots vertically. Downward movement of the interposer forces the cycle bail to release the cycle clutch latch pawl.

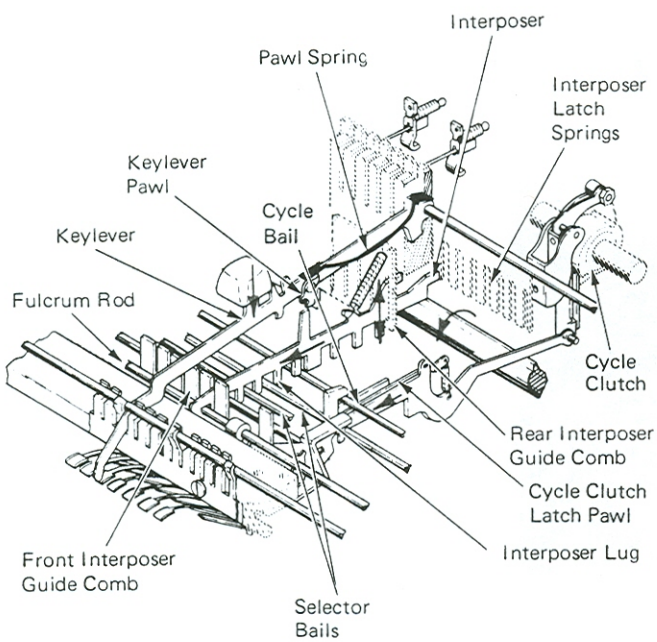

Figure 2 – Interposer

INTERPOSER LATCH SPRING

A spring latch is used to make sure the interposer remains depressed long enough to operate the character selection mechanism. The interposer latch is a flat spring mounted to the rear keylever guide comb in a position to move forward, holding the interposer down when it is depressed (Figure 3).

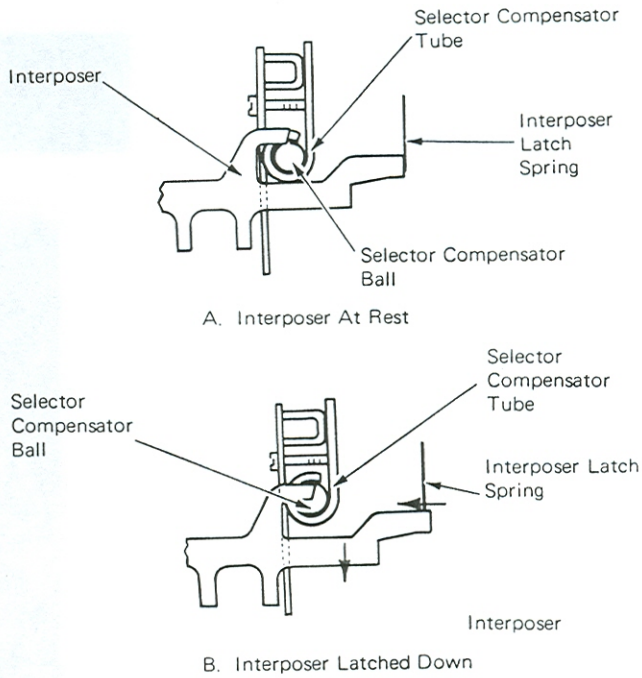

Figure 3 – Interposer Latch (Right Side View)

COMPENSATOR TUBE

A compensator tube is used to prevent more than one interposer from latching down at a time. Each interposer has a lug at the top that enters the compensator tube. The compensator tube contains closely spaced steel balls. When an interposer lug enters the tube, it shifts the steel balls, blocking the downward movement of any other interposer (Figure 4).

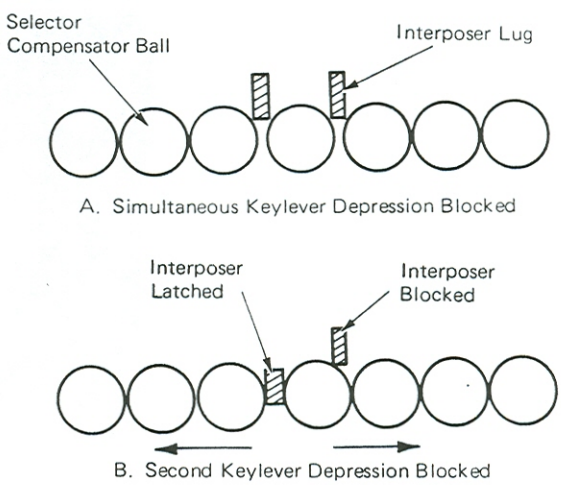

Figure 4 – Selector Compensator Action

An adjustable end plug, located at each end of the compensator tube, keeps the steel balls centered between the interposers. The balls are then prevented from shifting too far to the left or right. If the balls were allowed to move too far under the interposer lugs, they would partially block the downward movement of an interposer and result in a tight keyboard (Figure 5).

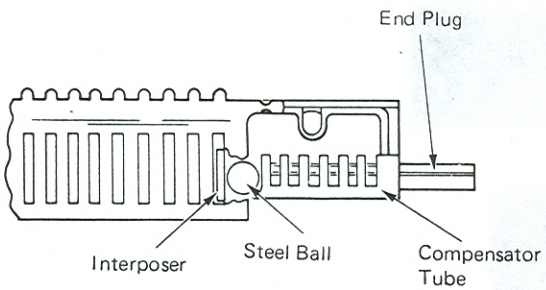

Figure 5 – Compensator Tube

SELECTOR LATCH INTERPOSER

Six latch interposers are located at the left end of the selector bails. Each latch interposer has a lug that extends up directly in front of the selector bail. As the selector bail is driven forward, the latch interposer is carried with it (Figure 6).

An adjustable link connects each latch interposer to one of the selector latches of the selection mechanism. When a latch interposer is moved forward, the selector latch connected to that interposer is also pulled forward to prevent it from being operated downward by the latch bail.

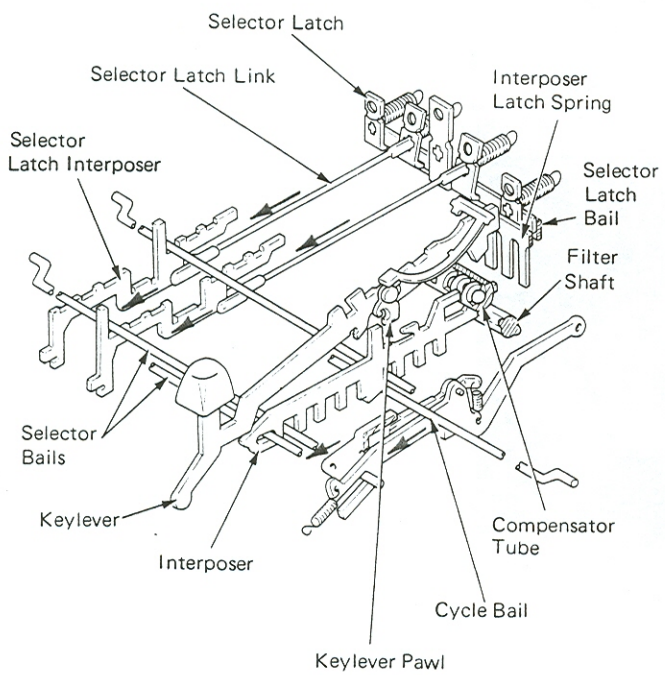

Figure 6 – Keyboard Selection Mechanism

A filter shaft is mounted just to the rear of the interposers (Figure 7). After the interposer is in the latched position, rotation of the filter shaft will drive the latched interposer forward. The interposer lugs will then operate the proper selector bail. The interposer motion is enough to remove the interposer from beneath the interposer latch spring. This allows the interposer spring to restore the interposer to the rest position.

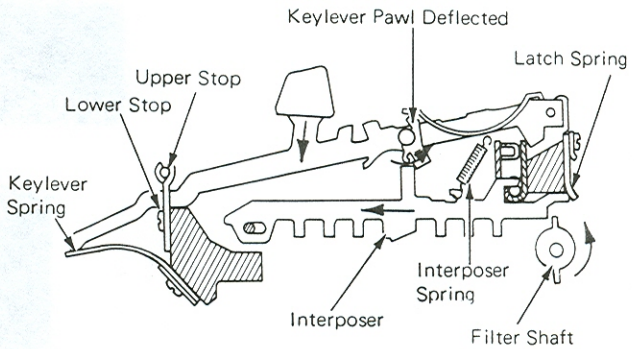

(Right Side View)

Figure 7 – Interposer Operation

CYCLE CLUTCH RELEASE

Although not a part of the keyboard, the cycle clutch latch is directly related to the keyboard mechanism (Figure 8). Downward movement of a keylever will allow the cycle clutch to operate.

The cycle clutch latch pivots on a bracket mounted in front of the cycle clutch pulley. The cycle clutch latch is held in position to engage the cycle clutch sleeve by the cycle clutch latch pawl and link assembly that extends forward from the cycle clutch latch. The cycle clutch latch pawl pivots on the cycle clutch link. The cycle clutch latch pawl engages the cycle clutch keeper to hold the cycle clutch latch under the step on the cycle clutch sleeve.

When a keylever is pushed down, the interposer below the keylever forces the cycle bail downward (Figure 8). The cycle bail moves the cycle clutch latch pawl down, disengaging it from the keeper. An extension spring at the front of the link is allowed to move the link and cycle clutch latch forward, disengaging the latch from the cycle clutch sleeve. This allows the cycle clutch spring to tighten and begin a cycle operation.

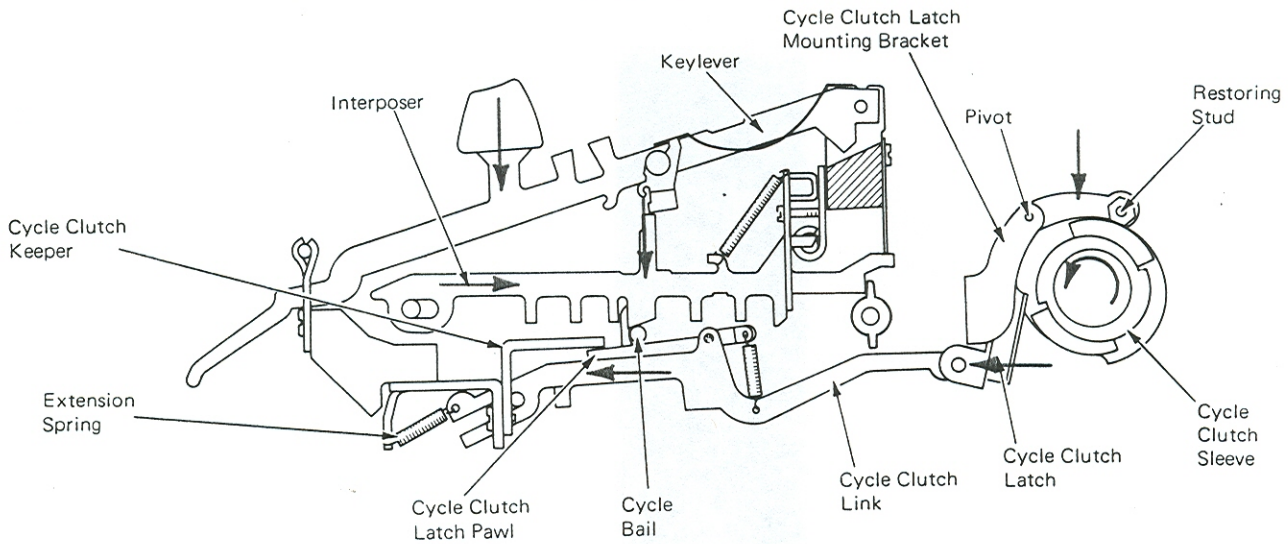

Figure 8 – Cycle Clutch Latch Release (Right Side View – Released Position)

CYCLE CLUTCH LATCH RESTORING

A nylon restoring cam attached to the cycle clutch clamp restores the cycle clutch latch (Figure 9). A horizontal extension at the top of the cycle clutch latch has a small adjustable stud mounted on it which operates on the restoring cam during a restoring operation. When the machine is at rest, the low point of the restoring cam is directly below the stud. When the cycle clutch latch moves forward, the stud on the extension drops down on the restoring cam.

The restoring cam rotates toward the high point and forces the stud on the extension up, moving the cycle clutch latch to the rear into the path of the next step on the cycle clutch sleeve. The latch is restored far enough to the rear to allow the cycle clutch latch pawl to reset on the keeper.

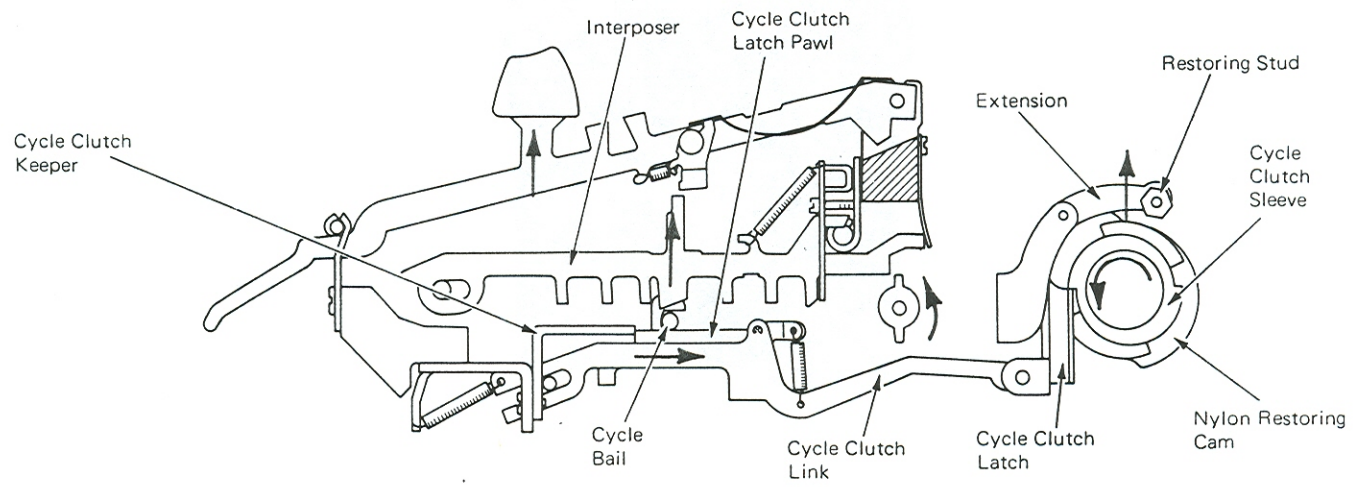

Figure 9 – Cycle Clutch Latch Restoring (Right Side View)

CYCLE BAIL DAMPERS (LEVEL 1 "SELECTRIC" TYPEWRITERS)

A small lever, called the cycle bail damper, pivots at each side of the keyboard just above the cycle bail (Figure 10). The purpose of the dampers is to lightly slow the upward movement of the cycle bail to prevent the bail from bouncing as it reaches the upward limit. Without the dampers, the bail could possibly bounce and cause an extra cycle of the cycle clutch.

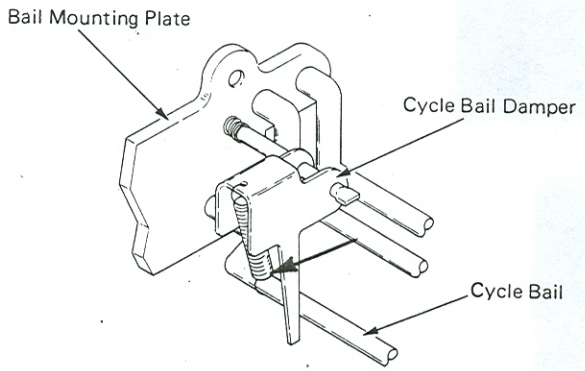

Figure 10 – Cycle Bail Damper (Level 1)

KEYBOARD LOCK

When the switch is in the off position, the keyboard must be locked to prevent a print operation the next time the switch is turned on.

The switch lever operates the lockout bail into a position below an extension of the cycle clutch latch pawl when the switch lever is in the off position. To further prevent an interposer from latching down, a linelock interposer at the left side of the keyboard is rotated into the selector compensator tube by the lockout bail. This forces the steel balls to shift in the tube and block the downward movement of all interposers. When the switch is in the on position, the linelock interposer is spring loaded out of the selector compensator tube (Figure 11).

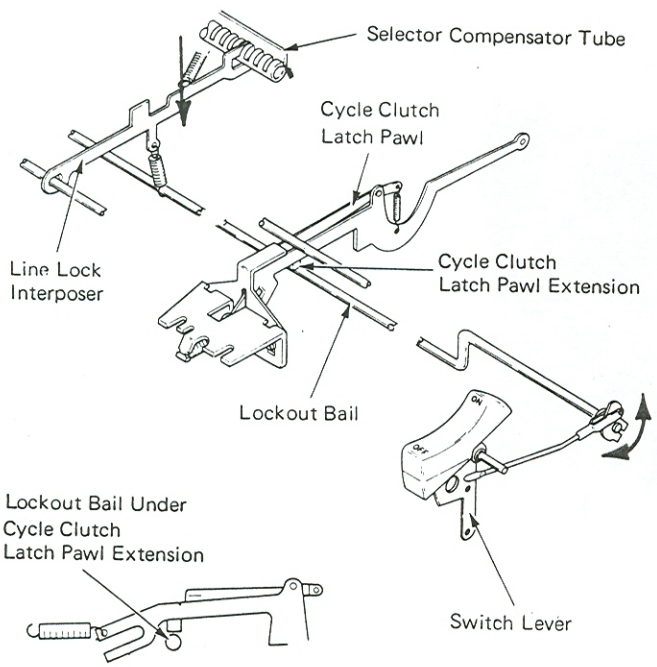

Figure 11 – Keyboard Lock Mechanism – Off Position (Right Side View)

96 CHARACTER "SELECTRIC" TYPEWRITER (W.T.) KEYBOARD ARRANGEMENTS (96 CHARACTER)

The keyboard has been designed to get the space for the added 4 keybuttons (shown in Red – Figure 12).

Carrier Return Key – Is smaller [6/8" (16 mm) wide] which allows space for type keybuttons in positions 45 and 46.

Express Backspace Key – Is located to the right side of the right shift keybutton.

Tab Key – Is reduced in size by removing the upper extension.

Shift Keys – The space for the shift keybuttons is smaller but the surface of the keybutton is similar in size to those on an 88 character machine.

The other functional keybuttons (backspace, index, and margin release) are only changed in size, but remain in the same place as on the 88 character keyboard.

The four new type keybuttons are located in positions 45-48. Positions 47 and 48 do not follow the normal sequence of the type keybuttons. Position 47 is to the left side of position 0, and position 48 is to the left of position 4. The repeat key(s), low velocity key(s) and dead key(s) positions are different in each country.

The design of the keyboard has been changed to allow these additional four keylevers. Also, other parts of the keyboard had to be changed. The parts are: front and rear keylever guides, front and rear interposer guides, compensator tube, keylever springs, interposer latch springs and the cycle bail damper springs. The cycle bail damper springs have been replaced by a flat leaf spring that is mounted to the cycle clutch latch keeper bracket. It has the same effect as the earlier dampers.

The correction feature is also compatible with this machine and the keybutton is in the same location as on the 88 character keyboard.

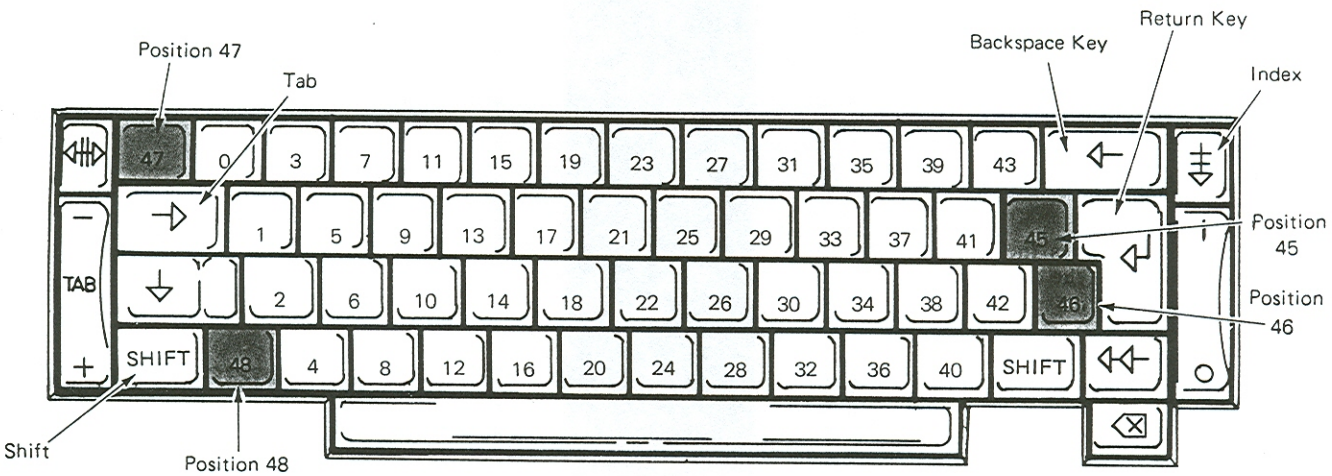

World Trade Functional Keys

Shift Lock

Backspace

Express Backspace

Carrier Return

Index

Correction Key

Margin Release

Tab

Figure 12 – Keyboard Arrangement

KEYBOARD ADJUSTMENTS

1. *Keyboard Position* – With the extensions on the keyboard side frame touching the front carrier support, rotate the keyboard until the filter shaft bearings are held tightly between the side plates and the power frame. Tighten mounting screws.

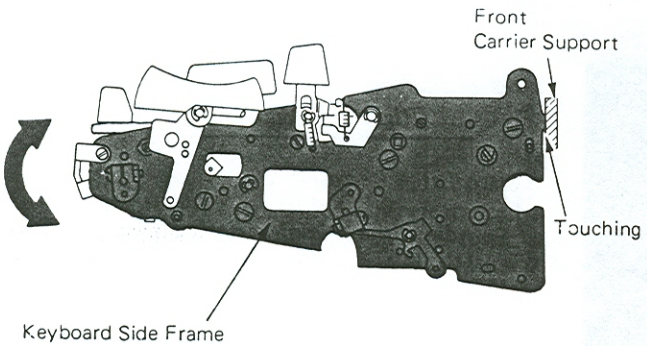

2. *Filter Shaft* – Loosen the filter shaft gear and rotate the filter shaft so that the working surface of the filter shaft clears the rear of any latched interposer by .005"-.010" (0.25-0.38 mm). This adjustment should be made with the machine at rest and all gear train backlash removed in the forward direction. Be sure to maintain .002"-.004" (0.05-0.10 mm) end play of the filter shaft.

   This adjustment affects the timing of all the cams mounted on the filter shaft.

   Not enough clearance between the filter shaft and the interposers could allow the filter shaft to stop just under the rear of the interposers. The keyboard would not operate, because the interposers could not be depressed.

   Excessive clearance would delay the operation of the interposers. The selector latches would not be pulled forward from under the latch bail before the bail started moving downward. This would result in excessive wear and a noisy operation as the latches were pulled from under the bail. This condition is referred to as "popping latches."

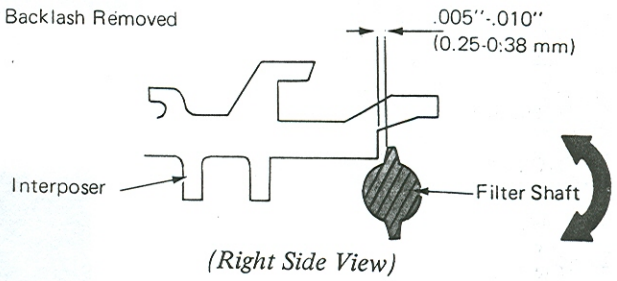

(Right Side View)

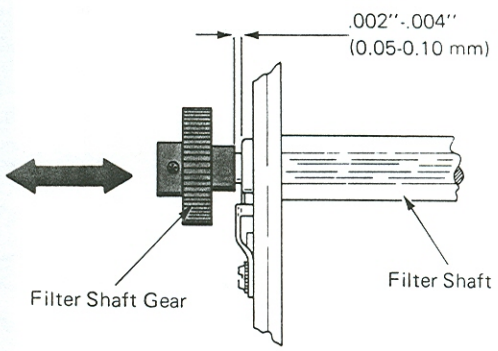

3. *Rear Bearing Support* – Adjust the rear bearing support to get .002"-.030" (0.05-0.76 mm) between the rear interposer guide comb and the vertical lugs on the interposers. Check this across the entire keyboard.

   Touch problems can occur if the rear lug of the interposer is contacting the rear interposer guide comb. There should be a minimum of .002" (0.05 mm) clearance. If not, the two keylever fulcrum support mounting studs may be loosened and the guide hit lightly to the rear. If excessive clearance (more than the pusher end of the spring hook) is present, bridging (malselection) can occur. The reason is that the interposer does not extend into the compensator balls far enough.

   W.T.NOTE: This applies to machines with aluminum support only.

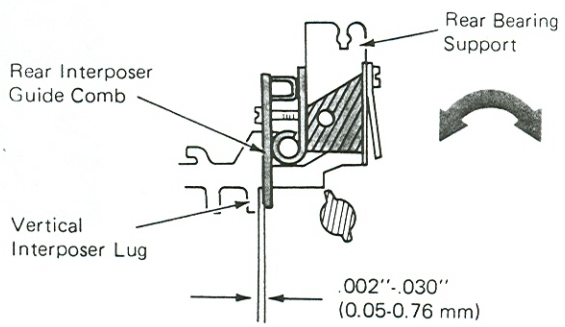

4. *Rear Interposer Guide Comb* – Adjust the guide comb vertically so that with the "N" interposer latched down, any other interposer pulled down will clear the tip of the filter shaft by .010" (0.25 mm) as the filter shaft rotates under it. To make this adjustment, loosen the four screws on the guide comb. Check the adjustment at several points across the filter shaft.

NOTE: The selector compensator tube is mounted to the rear of the interposer guide comb by two screws and must move vertically with the guide comb when the guide comb adjustment is made. Be sure to loosen the guide comb mounting screws before trying to move the guide comb. DO NOT HAMMER THE GUIDE COMB INTO POSITION AS THIS CAN CAUSE THE COMPENSATOR TUBE TO SHIFT WITH REFERENCE TO THE GUIDE COMB. The vertical position of the tube on the guide comb is set with reference to the stop strap attached across the bottom of the guide comb and should not be changed.

W.T.NOTE: For Punch Press Support; .020"-.030" (0.50-0.75 mm).

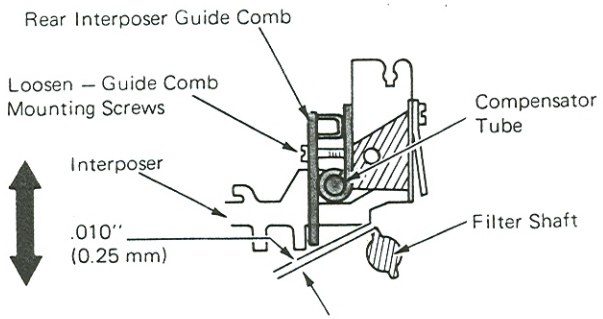

5. *Bail Mounting Plate* – Position the left-hand bail mounting plate to satisfy the following conditions. The selector bails should be parallel front-to-rear with the lugs on the interposers. At the same time, the cycle bail must be parallel vertically with the lugs on the interposers.

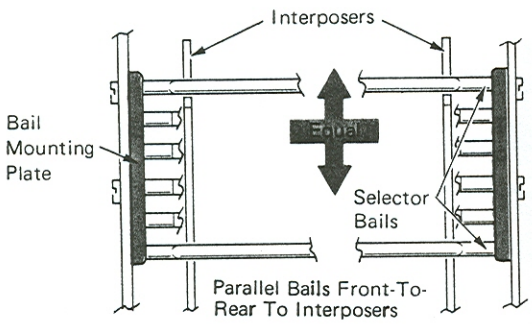

(Bottom View)

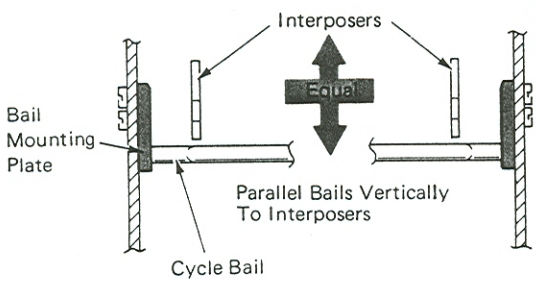

(Front View)

6. *Keeper Bracket* – Adjust the keeper bracket front to rear so that the cycle clutch latch engages the sleeve by the thickness of the keeper bracket with the machine at rest.

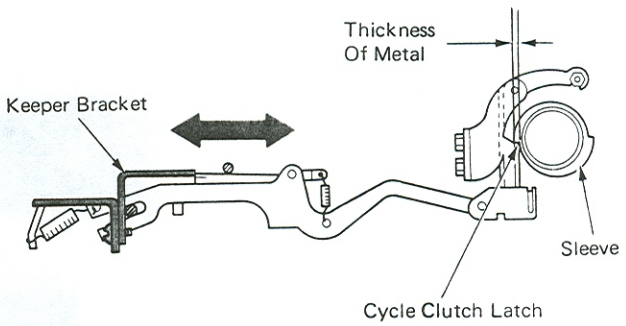

(Right Side View)

7. *Cycle Clutch Latch Restoring* –

Level 1 – Adjust the scissor restoring mechanism so that the latch link pawl overthrows the keeper by .030"-.045" (0.76-1.14 mm).

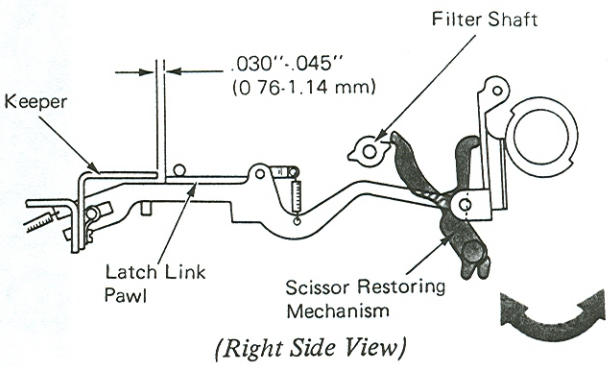

(Right Side View)

Level 2 – Adjust the restoring stud vertically so the latch link pawl overthrows the keeper by .015"-.025" (0.38-0.64 mm) before it restores. Hand cycle the machine and check this clearance on both sides of the restoring cam. Adjust the stud on the side providing the least amount of motion.

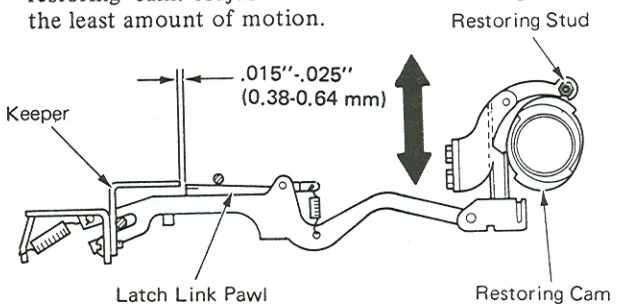

(Level 2 – Right Side View)

Form the restoring arm left to right so the restoring stud is flush to .015" (0.38 mm) inboard from the left edge of the restoring cam.

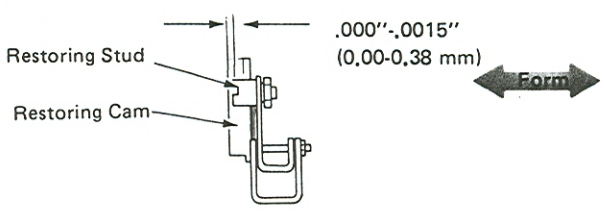

(Top View)

8. *Interposer Latch Springs* – Adjust the left and right group of interposer latch springs so the end of the latch springs are flush with the bottom of the interposer.

NOTE: Latch springs should be centered over the interposers.

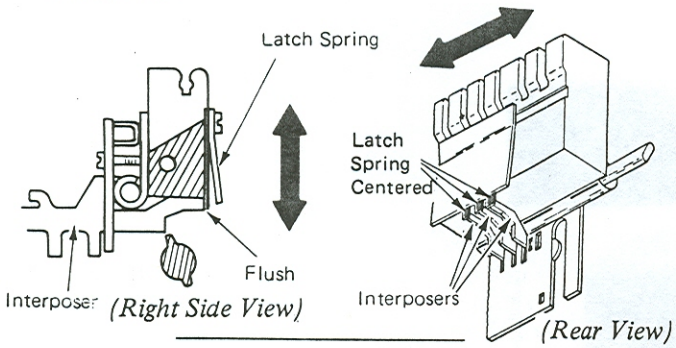

(Right Side View) *(Rear View)*

9. *Cycle Clutch Keeper* – Adjust the keeper vertically to get .000"-.002" (0.00-0.05 mm) clearance between the cycle clutch latch link pawl and the lower side of the keeper. Latch down an interposer, and hand cycle the character until that interposer is released from the compensator tube. Then, latch the same interposer a second time (placing that character into storage), and continue hand-cycling until the cycle clutch latch is point to point with the keeper during the restoring part of the first character's cycle. The cycle clutch latch keeper may now be moved up or down to get .000"-.002" (0.00-0.05 mm) and the cycle clutch latch will not move in the latched mode. Then, check the clearance with various interposers latched down.

The interposer latch spring adjustment may need to be readjusted to maintain .000"-.002" (0.00-0.05 mm) clearance across the keyboard.

NOTE: This clearance should be maintained on the low side of the adjustments. Too much clearance can cause a wrong selection because of flicking action on the keylevers, causing the cycle clutch to be released without latching an interposer down. As a result, the filter shaft will not drive an interposer forward and a wrong character will be printed.

Not enough clearance does not ensure that the clutch will be released when an interposer is latched down. If an interposer is latched down without releasing the cycle clutch, the keyboard will be locked because the interposer will remain in the compensator tube.

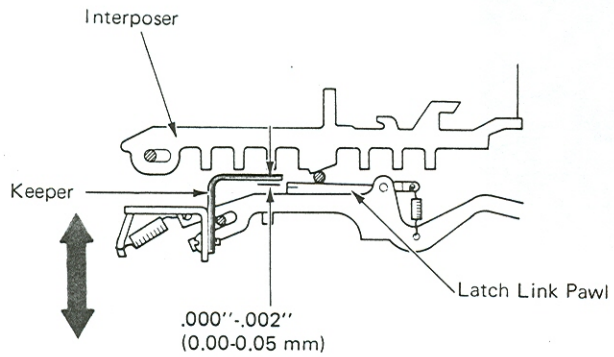

(Right Side View)

10. *Cycle Bail Upstop* – Adjust the cycle clutch bail upstop vertically so the cycle clutch latch link pawl engages the cycle clutch keeper by half the thickness with the machine at rest. This can be checked by making the center of the marked line on the latch link pawl even with the bottom of the keeper. The bail stop is mounted with two nuts and two screws. These nuts and screws also control the position of the character interrupter bail plate. In order to adjust the cycle clutch bail stop, loosen both nuts and only the front screw. Do not loosen the rear screw.

Not enough engagement will increase the possibilty of a repeat cycle because positive latching is not ensured. Excessive engagement will affect the touch of the keyboard because the latch pawl must be moved further in order to operate the cycle clutch.

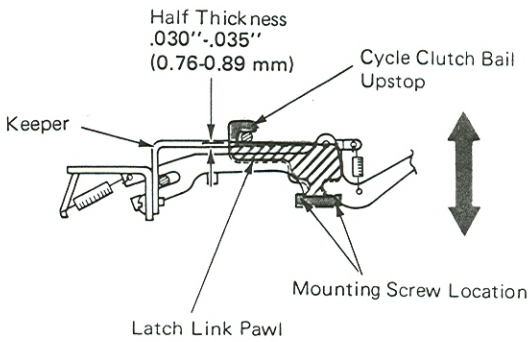

(Right Side View)

11. *Front Keylever Guide Comb* – Adjust the front keylever guide comb vertically for .016"-.024" (0.41-0.61 mm) clearance between the keylever pawl and the interposer lug as the keylever pawl resets above the interposer.

To check this adjustment, turn the power on and depress and slowly release keybuttons on the right, left, and center of the keyboard.

Keylevers that do not meet this adjusment may be formed at the horseshoe bracket.

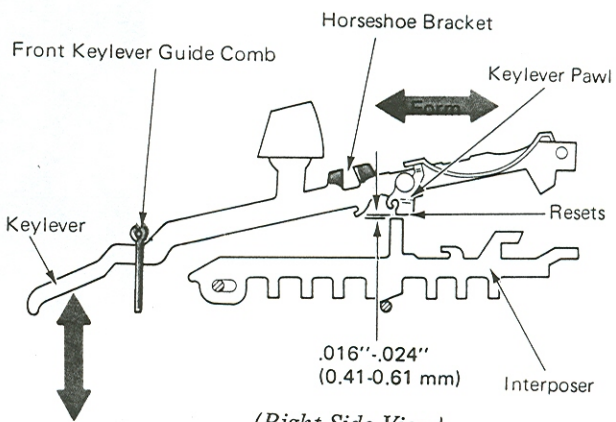

(Right Side View)

12. *Compensator Tube* – Adjust the compensator by using the following procedure: Tilt machine up, loosen the right end plug and latch out position forty-three interposer. Push the end plug tight against the balls and depress the H keylever until position forty-three interposer moves slightly to the right. Tighten the end plug. Repeat this procedure for the left side of the keyboard using position zero interposer and H keylever.

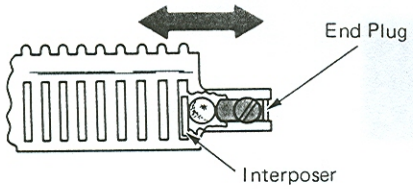

(Level 1)

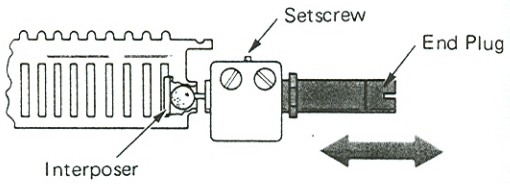

(Level 2)

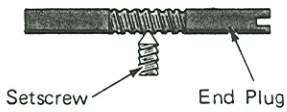

(Level 3)

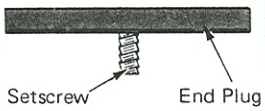

(Level 4)

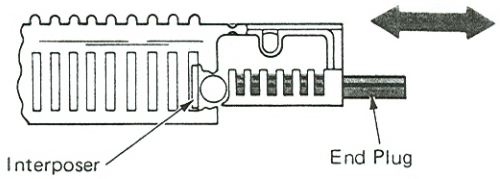

(Level 5)

13. *Repeat Keylever – Level 2* – Form the extension lug on the keylever so that the hyphen underscore will print one character at a time when operated with normal pressure and will repeat with increased pressure. When the keybutton is bottomed, it must not bind off the repeat operation.

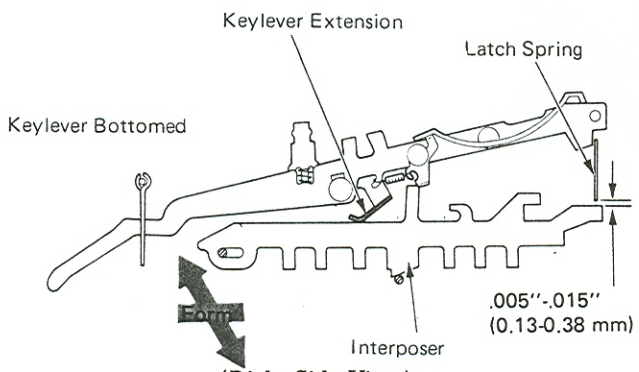

(Right Side View)

Row 4, Level 2 – With the keylever at rest, form the horseshoe bracket to get a clearance of .015"-.020" (0.38-0.51 mm) between the keylever pawl and the interposer.

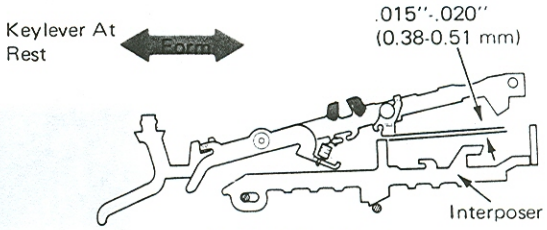

(Right Side View)

With the keylever fully depressed, form the extension to get .005"-.015" (0.13-0.38 mm) between the interposer and the interposer latch spring.

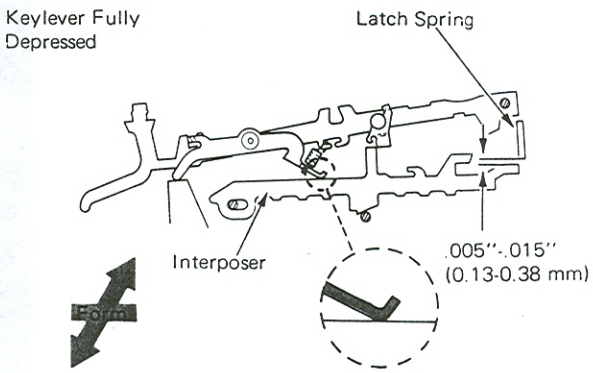

(Right Side View)

Row 4, Level 1 – Form the keylever extension to get a minimum clearance, without contact, between the keylever extension lug and the cycle clutch release bail. The front lug of the keylever extension should just contact the front guide comb support while viewing this adjustment.

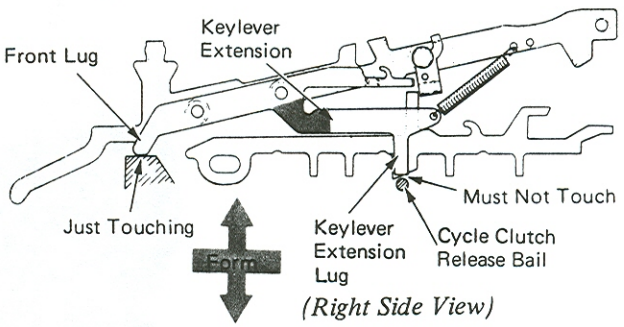

(Right Side View)

Form the keylever extension top lug to hold the interposer latched to the front during a repeat operation.

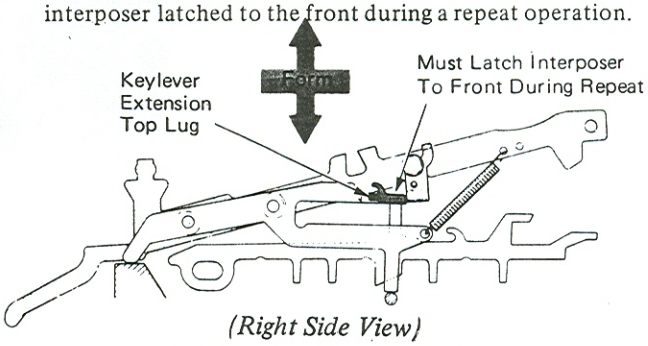

(Right Side View)

14. *Switch Link* – Adjust the switch link clevis so the on/off keybutton matches the slope of the keyboard in the off position.

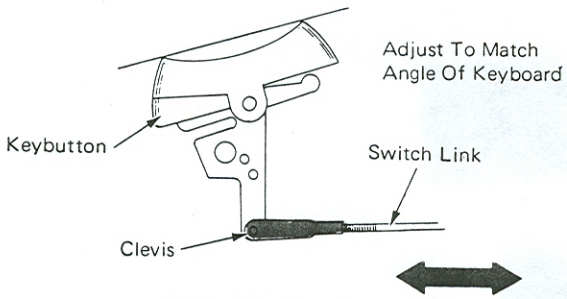

(Right Side View)

15. *Lockout Bail Link And Bellcrank* – With the switch in the off position, adjust the clevis to cover approximately one-half the threads on the link. Loosen the screw on the lockout bail bellcrank and position the lockout bail under the cycle clutch latch lug. Tighten the screw.

NOTE: A slow or hard keyboard may be caused by the one-piece keyboard locking interposer being partially engaged in the bail compensator tube. Check the adjustment of the keyboard locking bail and ensure that it positively locks the keyboard with the switch in the off position, yet unlocks the keyboard in the on position and allows the locking interposer to clear the compensator balls.

NOTE: The blue tip of the locking interposer spring should be attached to the interposer.

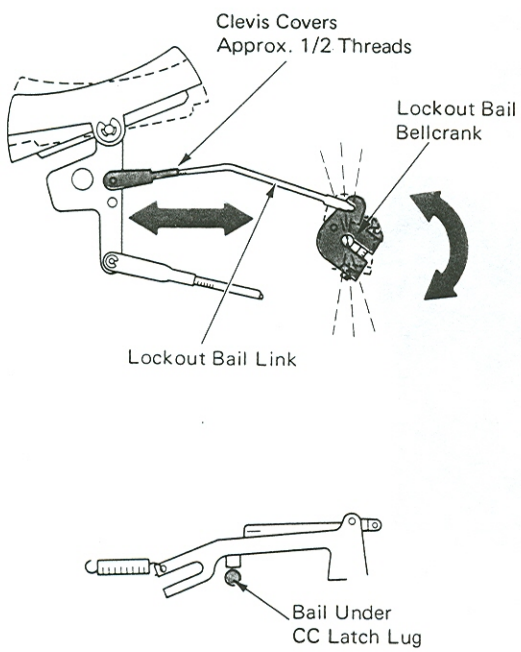

(Right Side View)

16. *Keyboard Lock Bellcrank Link* – Adjust the clevis so the bellcrank is fully bottomed in the selector compensator tube without binding off the motion of the lockout bail.

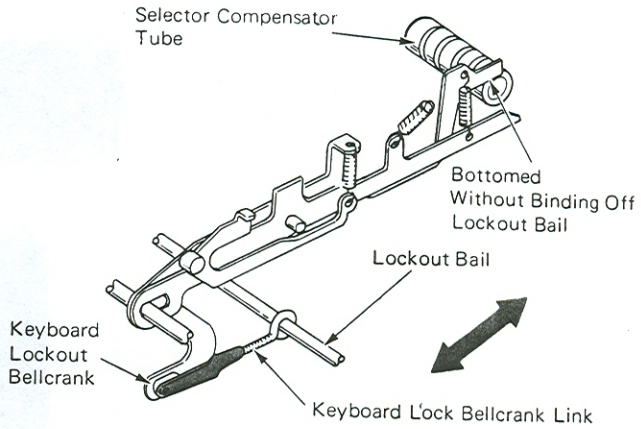

17. *Cycle Bail Damper Spring (W.T.)* – Adjust parallel to interposers. Make this adjustment with the keeper bracket adjustment.

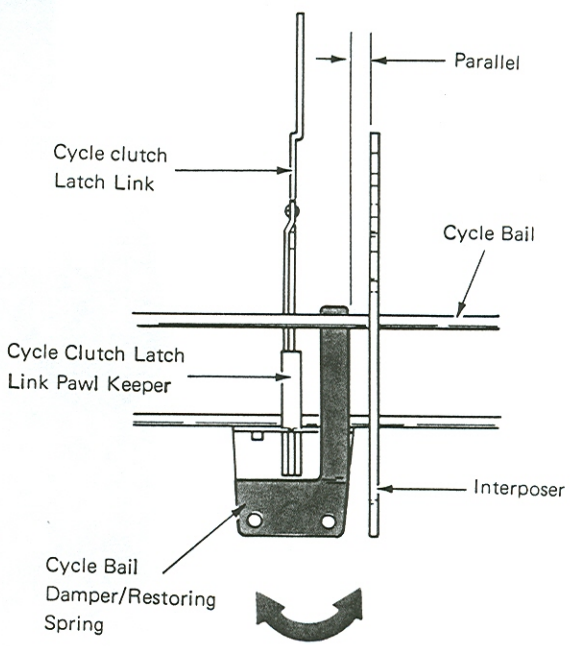

(Top View)

BLANK PAGE IN MANUAL FOR ADDING NOTES

SHIFT OPERATIONAL THEORY

The purpose of the shift mechanism is to rotate the typehead 180 degrees in the counterclockwise direction. This places the uppercase part of the typehead near the platen for typing uppercase letters. Each uppercase character is in the same tilt and rotate band as the lowercase character, but 180 degrees from it.

The shift mechanism consists of a shift arm, shift cam, spring clutch, clutch control mechanism and interlocks.

Two keybuttons, one at each front corner of the keyboard, can be used to operate the shift mechanism. A bail is used to connect the two keylevers together. The left-hand keylever has a lock mechanism attached to it to allow the operator to lock the keybutton down in the uppercase position. The shift lock may be released by depressing and releasing either shift keybutton.

The power to operate the shift mechanism is taken from the right-hand end of the operational shaft (Figure 1).

Motion of the shift bail is transferred through the shift release bellcrank and shift release link to operate the release arm. The release arm controls the shift ratchet and clutch spring to allow the shift cam to rotate.

Depressing the shift keybutton causes the shift cam to rotate, forcing the shift arm to move away from the power frame. This supplies enough pull on the rotate tape to rotate the typehead 180 degrees to the uppercase position.

Releasing the shift keybutton allows the shift keylevers to be returned to their rest position by the shift keylever spring and causes the shift cam to return home. The shift arm moves toward the power frame and the spring tension on the rotate tape system returns the typehead to the lowercase position.

NOTE: The rotate tape and pulley system is covered under the character selection section of this manual.

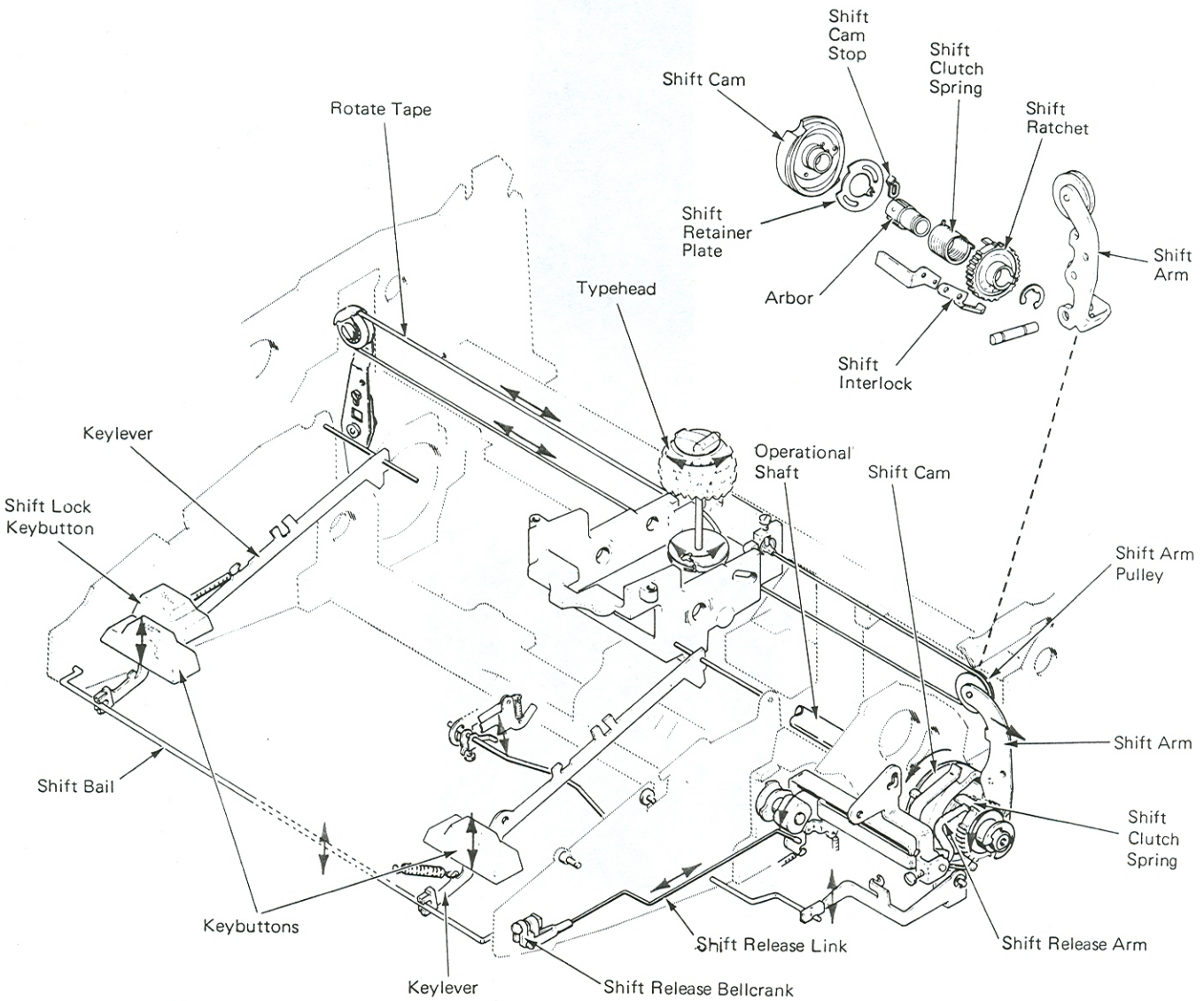

Figure 1 – Shift Mechanism

SHIFT ARM

The right-hand rotate pulley is attached to the top of the shift arm. The shift arm pivots left to right about a pin at the bottom. At the center of the shift arm is a roller that rides the surface of the shift cam. In the lowercase position, the shift arm rests against the head of an adjustable stop screw on the side of the power frame (Figure 2).

The shift cam is a disc-shaped cam that has the working surface on the right side of the cam rather than on the outer surface (Figure 2).

A backup button (pressed out on a section of the shift bearing plate) directly opposite the roller on the shift arm serves as a backing for the cam.

When the shift cam is operated, the high point of the cam is contacted and forces the shift arm away from the power frame, rotating the typehead 180 degrees into the uppercase position.

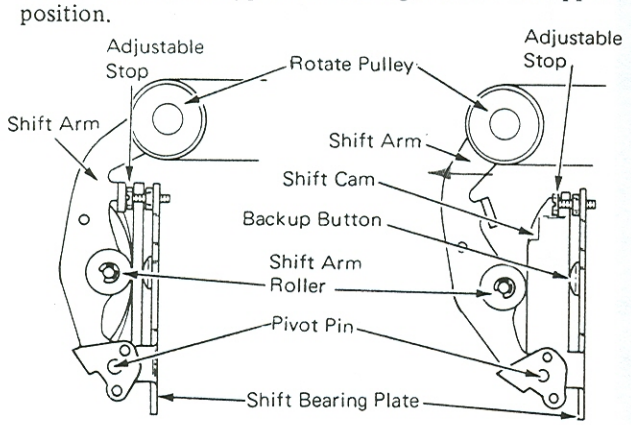

Figure 2 – Shift Cam And Shift Arm

Early level machines are equipped with a backup roller mounted to the shift bearing plate (Figure 3). The backup roller serves the same purpose as the pressed out button and is covered further in the shift adjustment section.

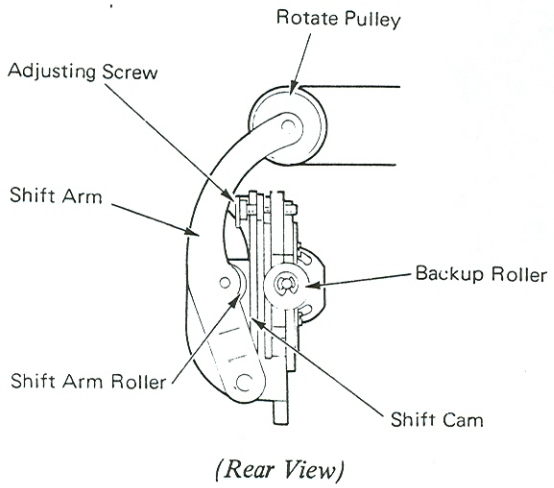

Figure 3 – Shift Cam Backup Roller

SHIFT CLUTCH

The shift cam rotates only during a shift operation and is controlled by a spring clutch. One end of the spring clutch is held to the shift cam by an adjustable retainer plate. The other end of the shift clutch spring is mounted to the shift ratchet (Figure 4)

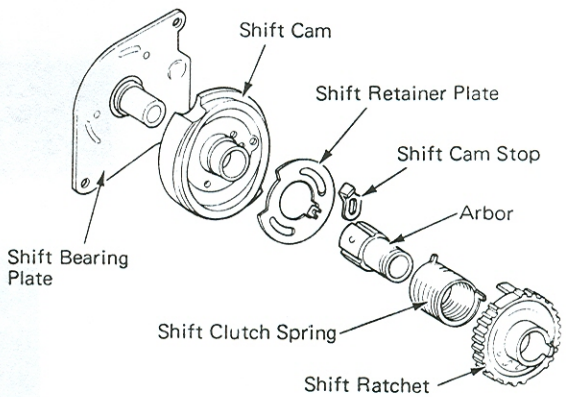

Figure 4 – Shift Clutch

SHIFT CLUTCH RELEASE

The shift ratchet has two lugs sticking out on the left side approximately 180 degrees from each other (Figure 5). One lug is closer to the center of the ratchet than the other lug. The shift clutch release arm, pivoted just in front of the cam, blocks the lugs to stop the rotation of the ratchet. The position of the shift release arm is positioned by a link connected between the shift clutch release arm and the shift release bellcrank attached to the shift bail. When the keylevers are at rest, the release arm is in a position to contact the inner lug of the shift ratchet. Depressing the keylever causes the clutch release arm to rise out of the path of the inner lug into the path of the outer lug. This allows the spring clutch to tighten around the shift arbor and drive the shift cam until the outer lug of the shift ratchet is contacted.

The overthrow of the shift cam is controlled by an adjustable stop attached to the cam and operates against the inner lug of the shift ratchet.

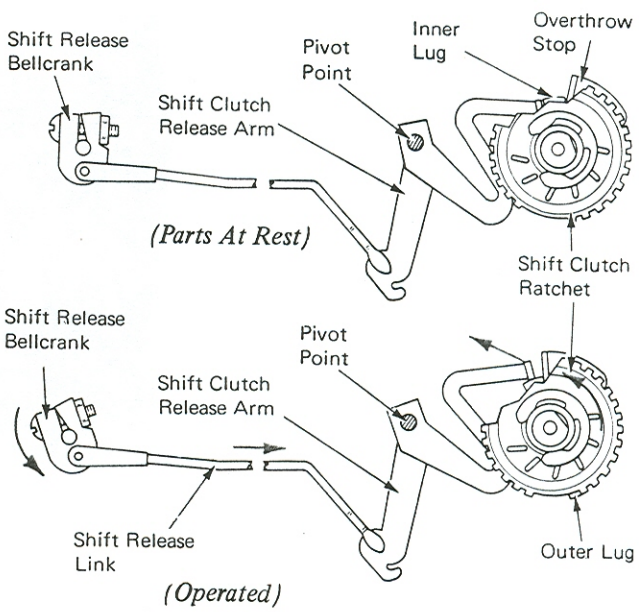

Figure 5 – Shift Clutcn Mechanism (Right Side View)

SHIFT CAM BRAKE

Shift cam overthrow is a greater problem in returning the machine to lowercase than in shifting to uppercase. This is due to the increased speed received from the pressure of the shift arm roller against the shift cam as it turns to the cam low point. To prevent excessive noise and possible parts breakage, a raised surface on the shift cam contacts a shift cam brake arm. The brake arm bends and works like a heavy spring when returning to lower case and prevents the increased speed of the shift cam (Figure 6).

NOTE: Early level machines have a nylon shoe mounted on the shift cam brake where it contacts the shift cam.

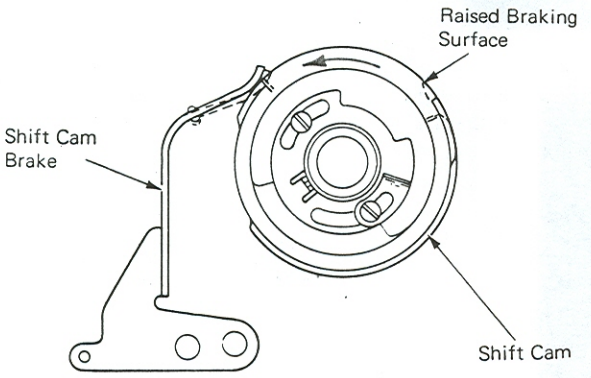

Figure 6 – Shift Cam Brake – (Right Side View)

SHIFT DETENT AND CHARACTER INTERRUPTER

Pivoted on a stud in front of the shift cam is the shift detent arm. The shift detent arm detents the shift cam in position and operates the character interrupter mechanism. The character interrupter mechanism prevents the operation of a character when the shift is operating. The character interrupter pawl is rotated into the path of the cycle clutch latch pawl and prevents the release of the cycle clutch. This interlocking action does not prevent the operation of a keylever or an interposer. The interposer is latched down into storage. When the shift operation is completed, the detent enters a slot in the cam removing the character interrupter pawl from in front of the cycle clutch latch link (Figure 7).

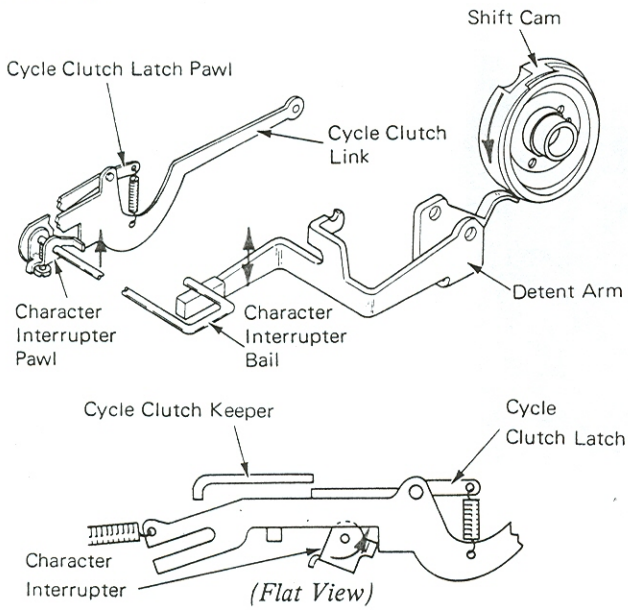

Figure 7 – Character Interrupter (Right Side View)

SHIFT INTERLOCK

If the shift mechanism is operated during a print character cycle, the shift interlock prevents the shift from operating until the character cycle is completed. The shift interlock operates from a cam mounted to the filter shaft. Each time the filter shaft turns, the shift interlock is positioned into the shift clutch ratchet to prevent a shift operation (Figure 8).

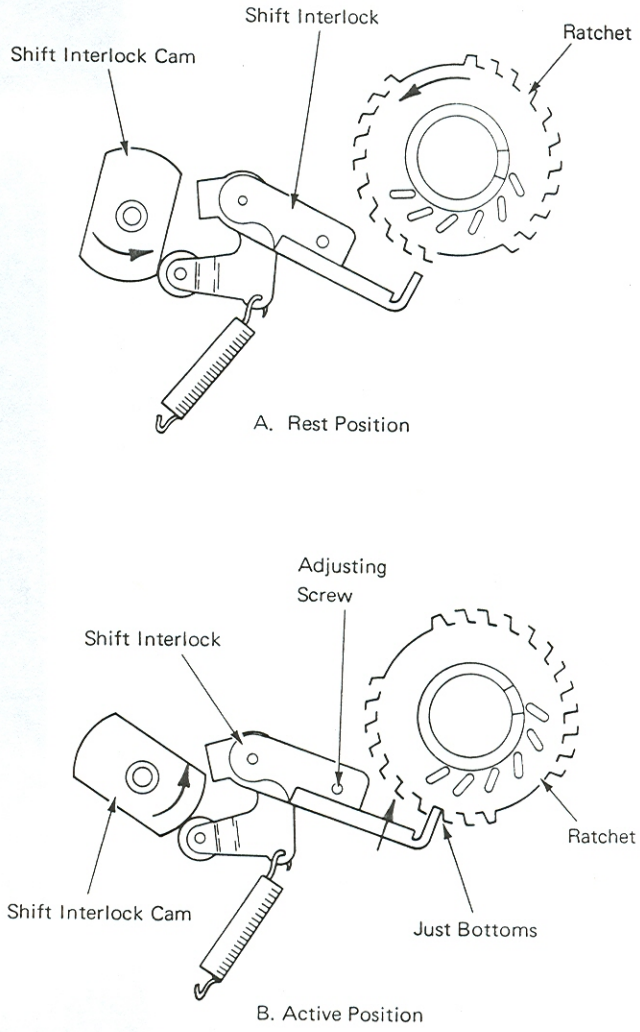

Figure 8 – Shift Interlock (Right Side View)

SHIFT ADJUSTMENTS

1. *Shift Cam Backup Roller (Early Level Machines Only)* – Adjust the backup roller eccentric left to right so .001"-.004" (0.03-0.10 mm) of the cam bearing extends past the cam. The eccentric should be kept in the bottom half of the rotation.

   CAUTION: Any change in the rest position of the backup roller, directly affects the typehead rotate adjustment and the shift arm motion adjustments. Be sure to recheck these adjustments.

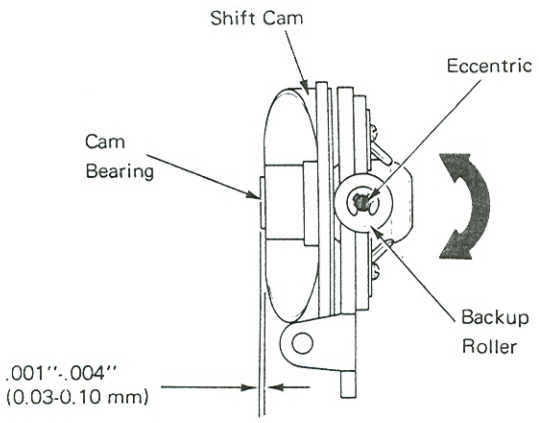

(Rear View)

2. *Shift Cam Bearing (Early Level Machines Only)* – Adjust the shift cam bearing left-to-right to get a clearance of .000"-.003" (0.00-0.08 mm) between the shift cam and the shift cam backup roller. Machines equipped with a washer between the shift cam and bearing plate should be adjusted for a clearance of .000"-.001" (0.00-0.03 mm).

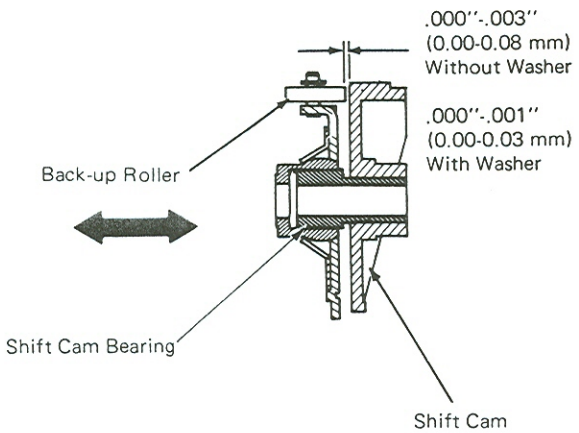

(Top View)

NOTE: Machines above S/N 7X1-5805429; 7X3-5277541; 7X5-5623384 do not have adjustments 1 and 2.

3. *Shift Spring Clutch Retaining Plate* – Adjust the retaining plate around the shift cam so the ratchet will rotate one and one-half to two teeth when released and with the machine off and the shift cam in the upper-case rest position. Readjust so that shift cam detents reliably into uppercase position.

   Check this adjustment by holding the shift detent away from the shift cam. After a shift cycle, allow the detent roller to contact the shift cam. The detent should not move the cam more than .030" (0.76 mm) in either direction when the detent is fully bottomed in its detent notch (check both shift cycles).

   NOTE: Machines equipped with Level 1 metal shift cams require one tooth rotation of the shift ratchet when released. Machines with plastic and sintered steel cams require 1-1/2 to 2 teeth rotation of the ratchet when released from upper case.

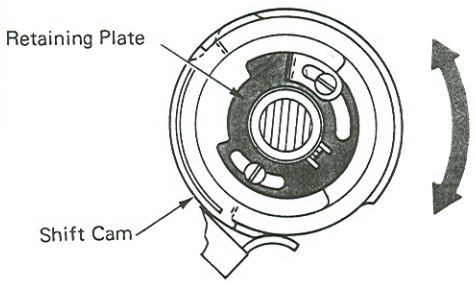

(Right Side View)

4. *Shift Overthrow Stop* – Adjust the shift overthrow stop to get .010"-.030" (0.25-0.76 mm) clearance between the stop and the inner lug of the shift ratchet, with all parts at rest. Shift to upper case. The clearance must be the same.

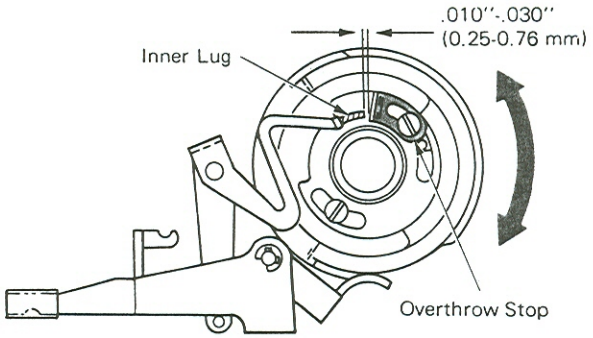

5. *Shift Brake* – Adjust the shift brake to get .045"-.065" (0.89-1.02 mm) rise as the brake contacts the working surface of the shift cam.

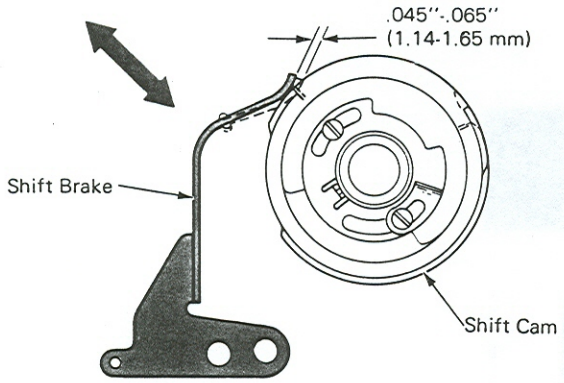

(Right Side View)

6. *Shift Release* – Position the shift bellcrank on the shift bail to have the same over center movement in both directions. Adjust the shift release link so release occurs when the keylever is depressed two-thirds of the way down. As the keylever is allowed to restore from a fully depressed position, the shift should again operate when two-thirds movement of the keylever has been reached. Equal movement between the two releasing points ensures proper adjustment.

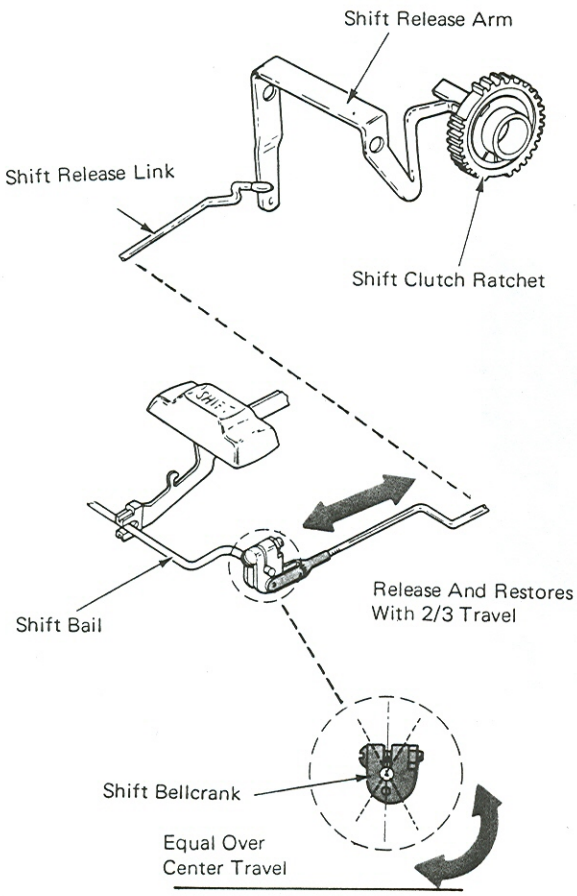

7. *Shift Lock* – Adjust the shift lock bracket vertically so the shift lock engages just as the shift operates or slightly after. The lock should not engage before the shift release occurs. The shift lock must be released easily by depressing either shift keybutton.

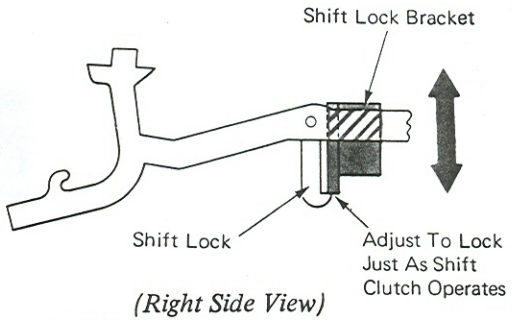

(Right Side View)

8. *Shift Interlock* – Adjust the interlock so the tip of the interlock just bottoms between two teeth on the ratchet with the interlock follower on the high point of the interlock cam. Adjust the interlock by the adjusting screw on XX3-XX5 machines to satisfy this condition or form the interlock on 7X1 machines.

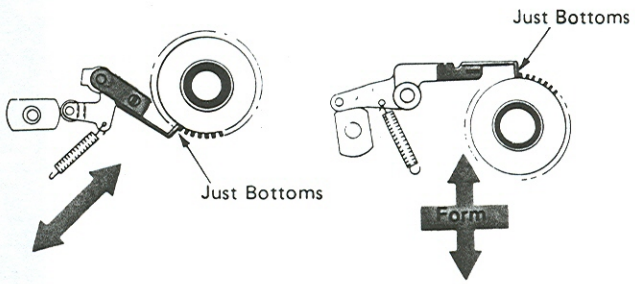

(Right Side View)

9. *Shift Interlock Cam* – Adjust the interlock cam until a clearance of .040"-.060" (1.02-1.52 mm) exists between the tip of the interlock and the top of the tooth on the shift clutch ratchet, with the cycle clutch latched at rest and all backlash of the cycle shaft and filter shaft removed in the operating direction.

CAUTION: Be sure the interlock cam is in the correct section of its rotation. This can be checked by operating the cycle clutch and hand cycling a character. The interlock must move toward the shift ratchet immediately.

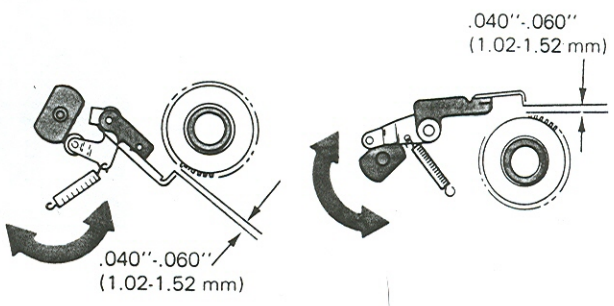

(Right Side View)

10. *Character Interrupter* – Adjust the character interrupter to satisfy the following conditions:

a. Adjust the interrupter pawl on the interrupter bail for minimum clearance between the interrupter pawl and the cycle clutch latch link when the cycle clutch latch link is in the released position and the shift is at rest.

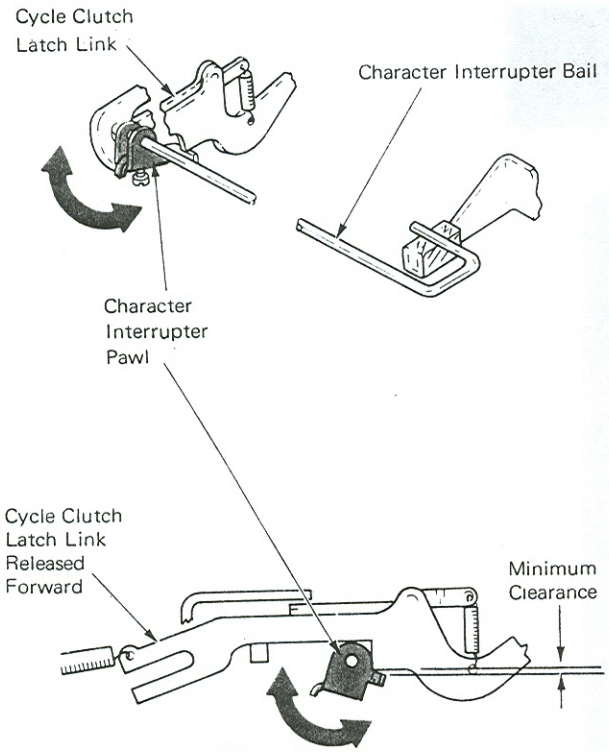

(Right Side View)

b. Adjust the interrupter bracket front-to-rear to get maximum clearance between the interrupter pawl and the cycle clutch latch link when the shift is partially operated. This clearance should not be wide enough to allow the cycle clutch to operate.

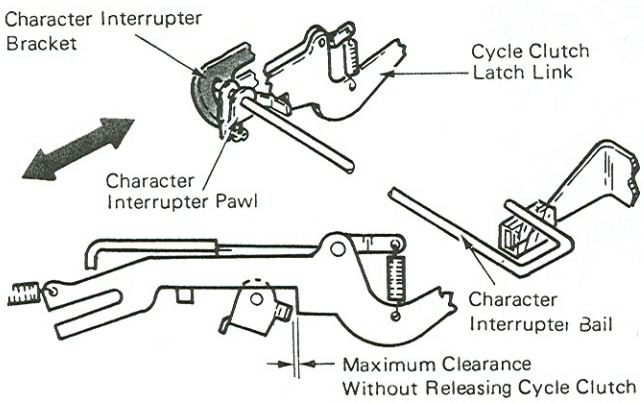

(Right Side View)

FINE ALIGNMENT OPERATIONAL THEORY

Fine alignment refers to how the typehead is locked and supported in place during a print operation to ensure that the desired character prints clearly. This section will discuss how the typehead is locked into position for printing. The desired character is brought to the approximate print position in front of the platen by the selection mechanism. Just before printing, the tilt and rotate detents lock the typehead in position both horizontally and vertically. After the print operation occurs, the tilt and rotate detents are removed, allowing the selection mechanism to return the typehead to rest (Figure 1).

The carrier assembly is supported in front by the print shaft. The print sleeve is keyed to the print shaft, causing it to turn when the print shaft rotates. The print sleeve turns within two bearings in the carrier casting (Figure 1).

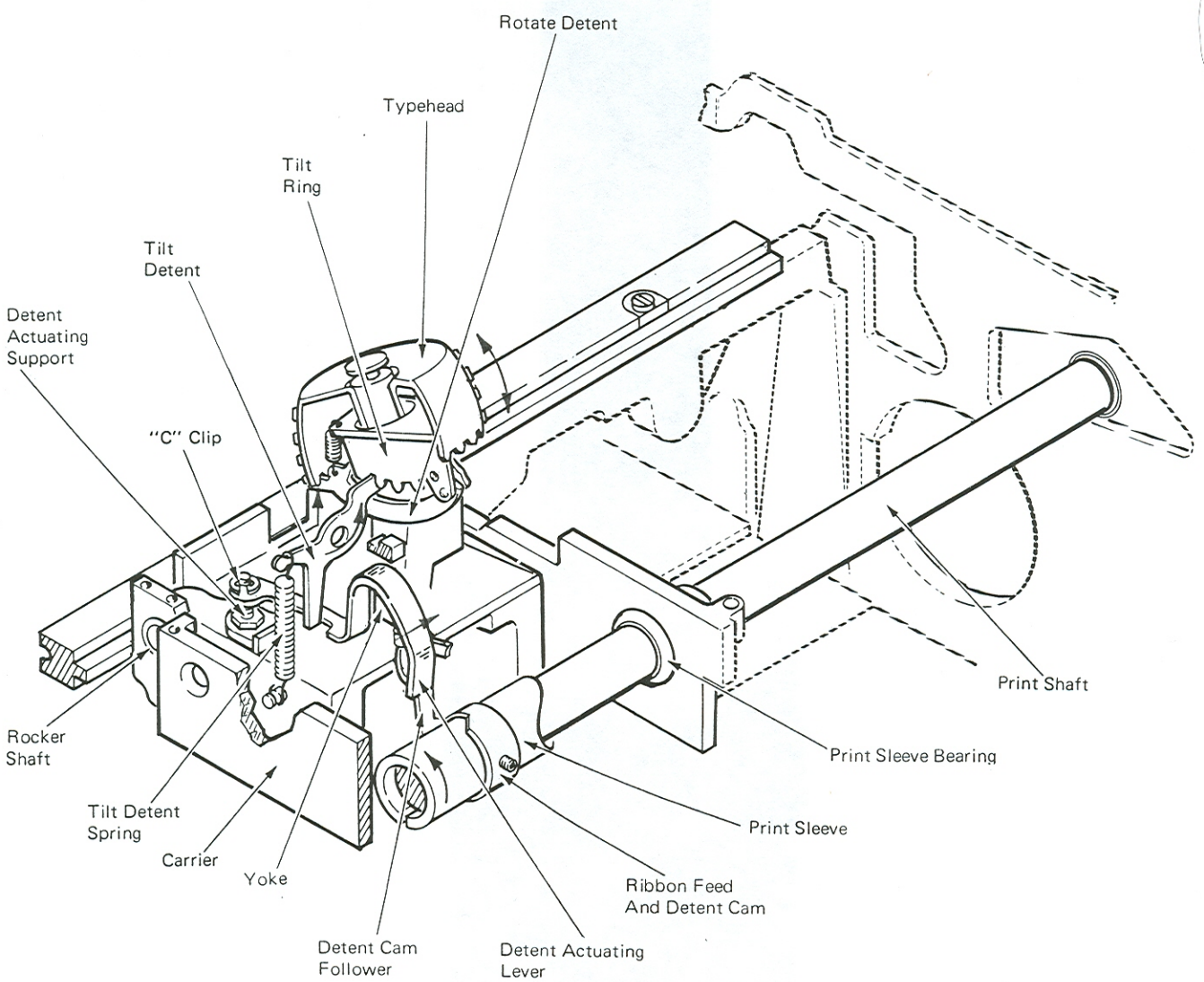

Figure 1 – Tilt And Rotate Detents

REAR CARRIER SUPPORT

The rear of the carrier is supported by the front edge of the escapement rack. A carrier shoe is mounted to the rear of the carrier. The front of the escapement rack fits into three lugs extending from the carrier shoe (Figure 2). A load spring, which is attached to the carrier shoe, maintains a constant pressure on the escapement rack, keeping any vertical play at the rear of the carrier to a minimum during a print operation.

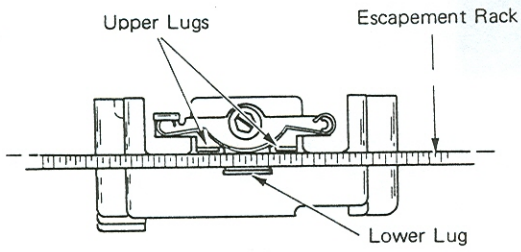

(Rear View)

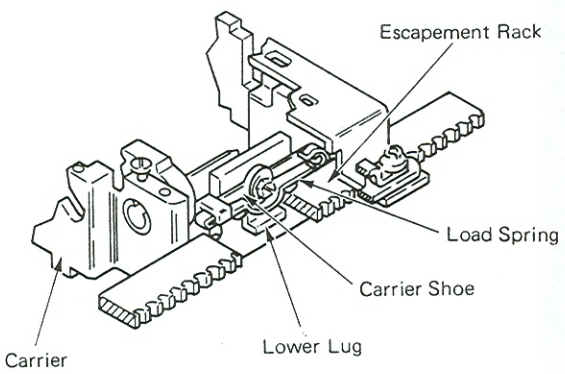

Figure 2 – Rear Carrier Support (Level 3)

Level 2 Machines – Two carrier shoes are used. A load spring is used to maintain a constant pressure on the upper carrier shoe and remove the play between the lower shoe and the bottom of the escapement rack (Figure 3).

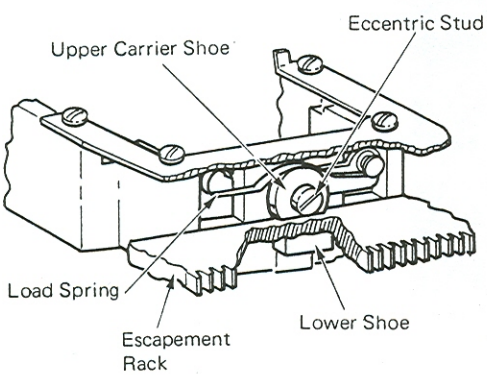

Figure 3 – Rear Carrier Support (Level 2)

Early Level Machines – The carrier has two shoes. The lower shoe is a small block attached to a plate and mounted on the carrier. The upper carrier shoe is mounted by an eccentric stud (Figure 4).

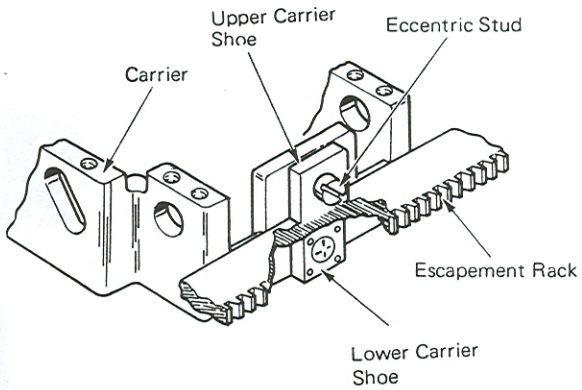

Figure 4 – Rear Carrier Support (Level 1) (No Load Spring)

ROCKER

The rocker is located in the rear of the carrier (Figure 5). The rocker assembly pivots about the rocker shaft.

Attached to the top of the rocker is the yoke (Figure 5). The yoke has two arms that extend up to provide a mount for two pivot pins. The pivot pins are adjusted to provide a tight pivot point for the tilt ring. Mounted at the top of the tilt ring is the upper ball socket to which the typehead is attached. The upper ball socket must be a tight fit with no binds. This is done by using shims under the tilt ring spacer.

The Level 2 tilt ring has an elongated hole to allow the upper ball socket to be spring loaded to the front of the machine. This keeps the tilt ring backup shoe in contact with the inside of the element providing a more constant print impact.

On the Level 1 tilt ring, the hole is not elongated to allow front-to-rear motion.

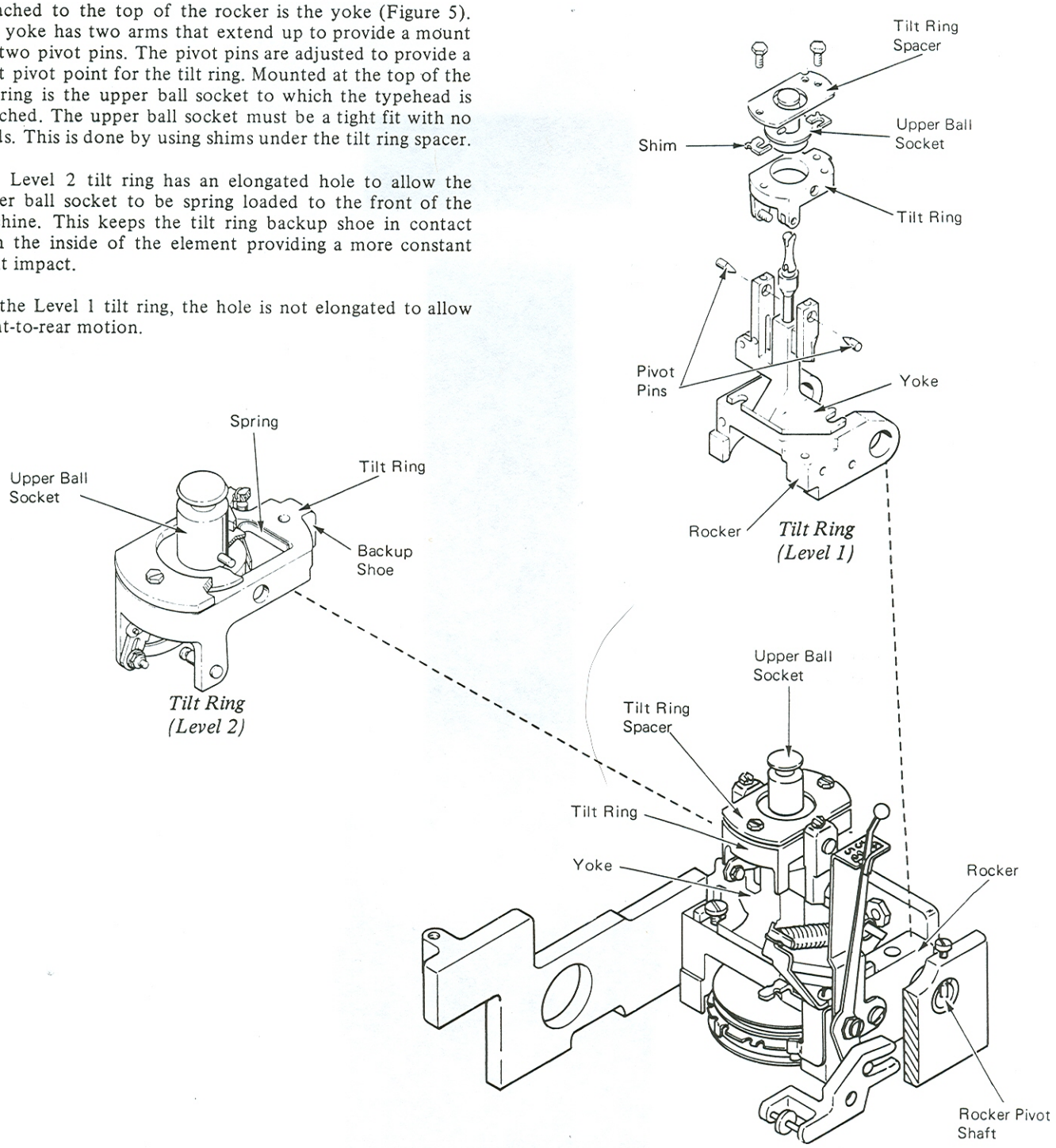

Figure 5 – Rocker Assembly

DETENT OPERATION

Motion to operate the detents is provided by the print sleeve which is keyed to the print shaft and rotates 360 degrees during each print cycle. This motion is connected through the detent cam, cam follower and detent actuating lever (Figure 6). The spring load of the tilt detent spring causes the detent cam follower to contact the surface of the detent cam. As the detent cam follower contacts the low point of the cam, the detent actuating lever moves to the right and allows the tilt detent to enter a notch in the tilt ring and the rotate detent to enter a notch in the typehead skirt. The side play in the tilt and rotate detents must be minimum to tightly lock the typehead. This is done by using detent guides (Figure 6). As the print sleeve continues to rotate, the high point of the cam is contacted. The cam follower and actuating lever are then driven to the left to remove the detents from their notches. This allows the character selection mechanism to return the typehead to rest.

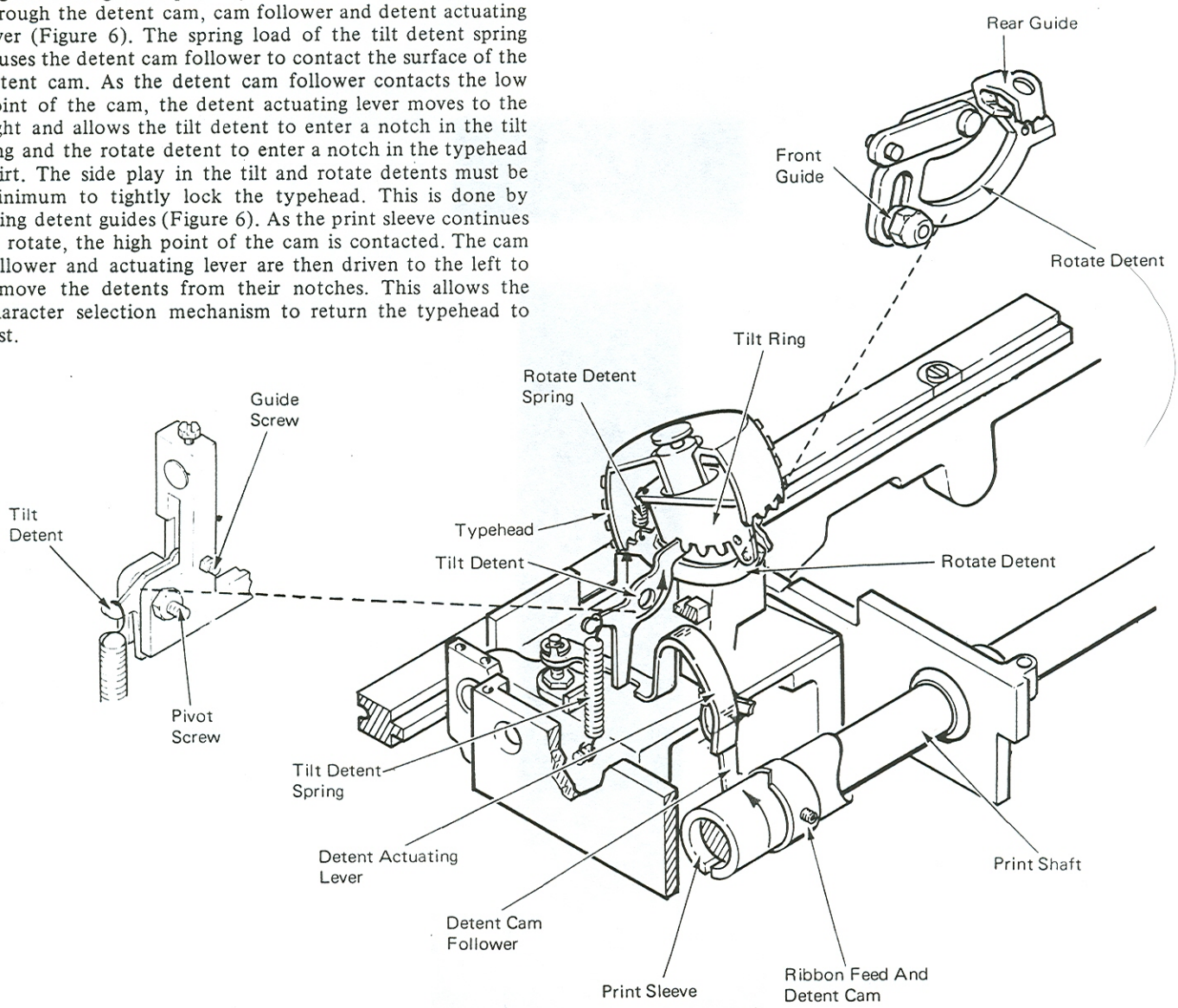

Figure 6 – Detent Operation

Vertical and horizontal alignment must be properly identified before any adjustments are changed.

VERTICAL alignment problems exist when the letters are out of position as follows:

anbncndnenfngnhninjnknlnmnnnonpnqnrnsntnunvnwnxnynzn
ANBNCNDNENFNGNHNINJNKNLNMNNNONPNQNRNSNTNUNVNWNXNYNZN

HORIZONTAL alignment problems exist when the letters are out of position as follows:

anbncndnenfngnhninjnknlnmnnnonpnqnrnsntnunvnwnxnynzn
ANBNCNDNENFNGNHNINJNKNLNMNNNONPNQNRNSNTNUNVNWNXNYNZN

96 CHARACTER "SELECTRIC" TYPEWRITER (W.T.)

The size of the IBM 96 type element is the same as an 88 character element. The IBM 96 type element uses two additional rotate rows of four characters each on the type element. Therefore, the rotate teeth are slightly closer together (Figure 7).

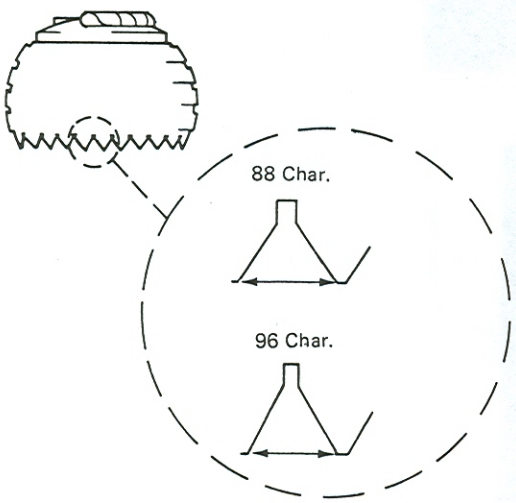

Figure 7–Type Element

The positions of the tilt rows are a larger diameter on the type element to reduce side printing. Because of this, the tilt ring detent notches are closer together (Figure 8).

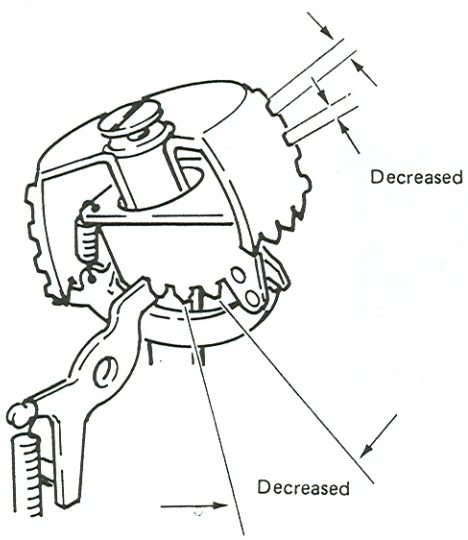

Figure 8 – Tilt Ring

The grooves in the inner tube of the type element are different. This serves as an interlock and will prevent the customer from putting a 96 character type element on an 88 character machine, and opposite (Figure 9).

The tops of 96-character type elements are colored gray to show the difference.

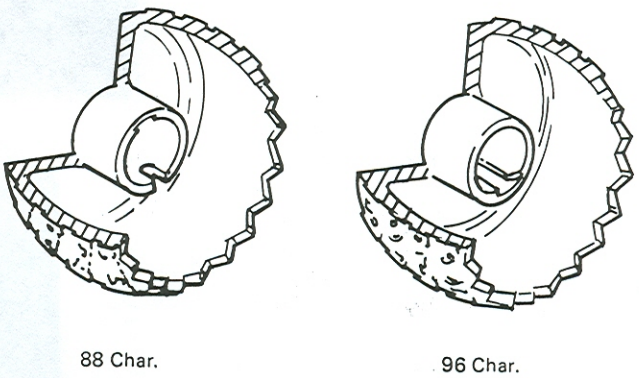

Figure 9 – Type Element Tubes

FINE ALIGNMENT ADJUSTMENTS

1. *Carrier Shoe – Level 1* – Adjust the eccentric mounting stud to get .001"-.004" (0.03-0.10 mm) vertical play between the carrier shoes and the escapement rack.

NOTE: This amount of vertical play allows free horizontal movement of the carrier and limits vertical movement to help prevent difference in the vertical alignment of the type characters.

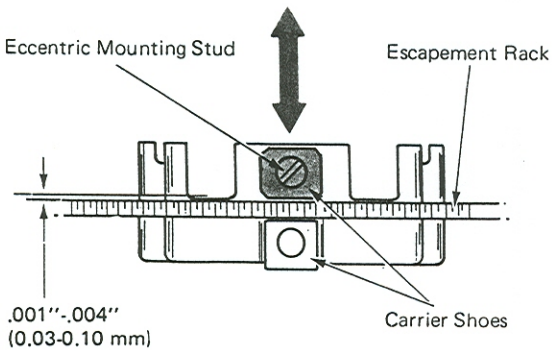

(Level 1 – Rear View)

Level 2 – Adjust the eccentric to get .002"-.006" (0.05-0.15 mm) vertical movement with the spring pressure removed.

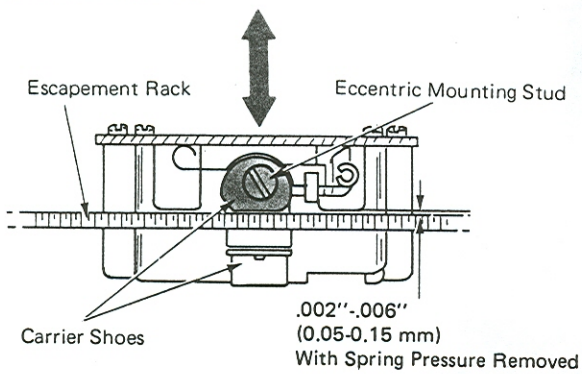

(Level 2 – Rear View)

Level 3 Parallel – Loosen mounting screw on carrier shoe. Press down hard on rear of carrier, keeping carrier shoe parallel with escapement rack. Tighten screw.

NOTE: On RB/S machines, ensure that the escapement pawl is centered in the escapement rack teeth.

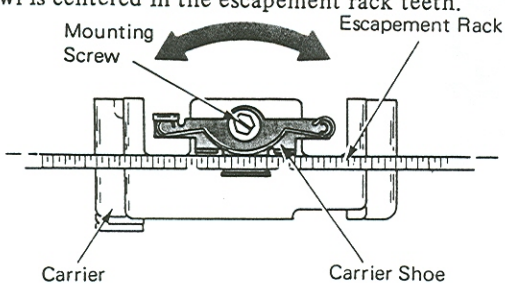

(Level 3 – Rear View)

2. *Print Sleeve End Play* – The print sleeve must have .002"-.004" (0.05-0.10 mm) end play.

Level 1 Predual Impression – Tighten the setscrew in the ribbon lift cam into the hollow and then adjust the print cam left to right to get the print sleeve end play.

NOTE: Check rotational adjustment of print cam after making this adjustment.

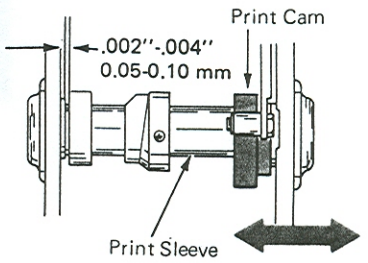

(Level 1 – Predual Impression) (Top View)

Level 2 Dual Impression – Adjust the ribbon lift cam left to right after the print cam setscrew is tightened into the locating hole in the print sleeve.

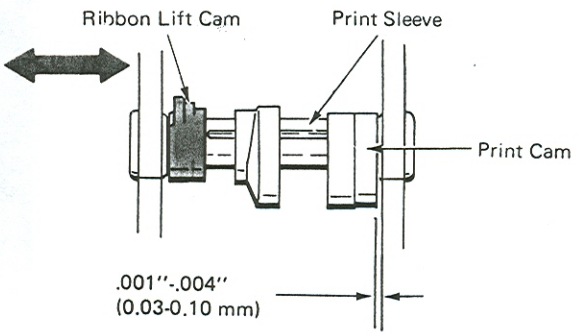

(Level 2 – Dual Impression) (Top View)

Correcting Machines – Ensure correcting lift cam is engaged in the ribbon lift cam dimple.

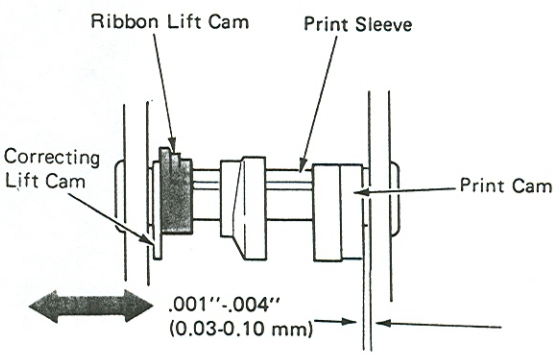

(Level 3 – Dual Impression Correcting) (Top View)

3. *Rocker End Play* – Adjust the rocker shaft left to right for minimum end play with no binds. The end play should exist between the "C" clip around the shaft at the right of the rocker and the thrust washer against the carrier casting at the left of the rocker. The rocker shaft is held in place by a setscrew at the left end of the rocker shaft in the carrier casting.

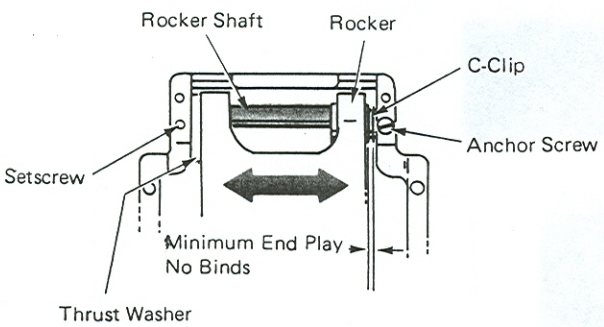

(Top View)

4. *Tilt Tube End Play (Machines Before Gearless Tilt)* – Adjust the tilt pulley vertically on the tilt tube to get .002"-004" (0.05-0.10 mm) clearance. The tilt tube pulley is attached to the tilt tube by a setscrew and a key against a flat surface on the tilt tube. The setscrew can be reached through a hole in the left side of the carrier. Move the carrier to the right and remove the tilt pulley spring and the tilt detent spring. The tilt detent spring stud can then be removed through the hole in the carrier. The height of the tilt section gear is adjusted by installing shims between the gear and the top of the yoke. This height is set to get minimum backlash with no binds between the tilt section gear and the tilt ring gear.

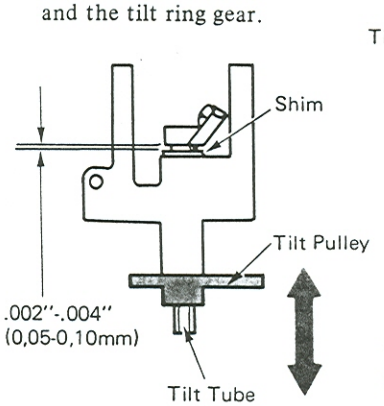

(Front View)

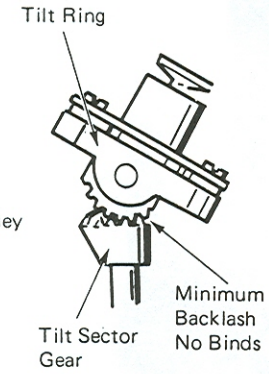

(Right Side View)

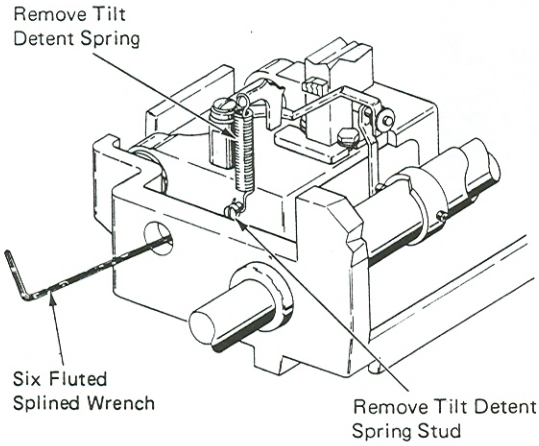

5. *Rotate Shaft Clearance* – Adjust the rotate pulley vertically to get .001"-.004" (0.03-0.10 mm) vertical motion of the rotate shaft. The rotate pulley is held to the rotate shaft by a wedging block and a setscrew. The pulley is reached from the bottom of the machine with the carrier centered over the cycle shaft and the machine in uppercase. DO NOT rotate the rotate shaft when the pulley is loose as this affects the rotate adjustment. Recheck typehead rotate adjustments after making this adjustment.

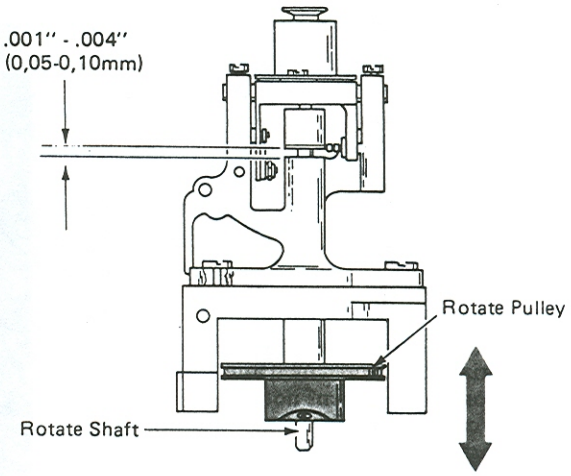

(Front View)

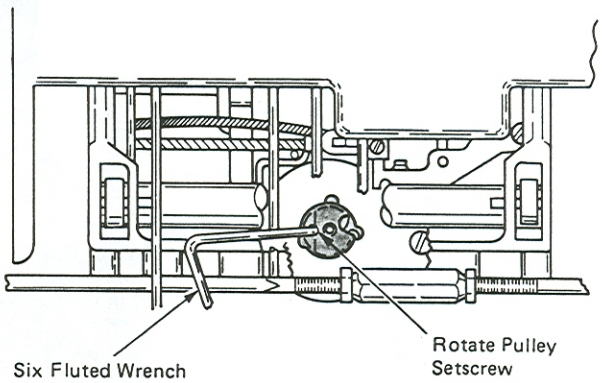

(Bottom View)

6. *Upper Ball Socket* –

a. Install shims between the tilt ring spacer so there is no vertical play in the upper ball socket, but it is still free to rotate.

NOTE: Vertical play in the upper ball socket will cause bad vertical alignment and impression because the typehead will not maintain an exact position when printing.

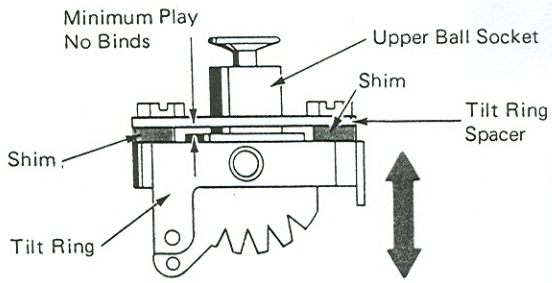

(RIght Side View)

b. *Level 1* – Position the tilt ring spacer front-to-rear and left-to-right so that the upper ball socket is centered in the tilt ring spacer.

NOTE: A bind in the upper ball socket can cause bad horizontal alignment if the rotate detent fails to bottom in the detent notch before print occurs. A bind can also cause the nylon roller to drop, on compensator-equipped machines, during a negative selection. Binds in the carrier area can be detected by manually operating the shift arm in and out with the typehead installed.

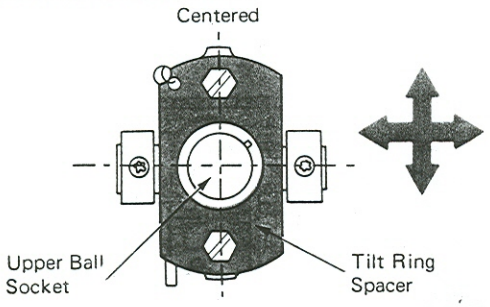

(Level 1 – Top View)

Level 2 Spring Biased Tilt Ring – Position the tilt ring spacer front to rear and left to right so that there is equal clearance between the upper ball socket and the front and both sides of the opening in the tilt ring spacer.

NOTE: To prevent malselection, all type elements used with this tilt ring must be lubricated with a light film of No. 23 or silicone grease on the inner surface.

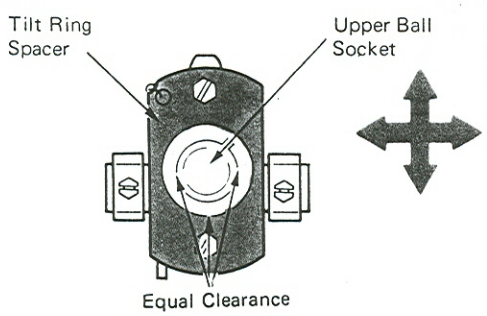

(Level 2 – Top View)

7. *Rotate Detent* – Adjust the front and rear rotate detent guides so the detent will operate vertically with no binds, but has no horizontal movement. Check this adjustment by half cycling a three tilt, zero rotate character and checking for rotational movement of the typehead. Excessive play in the rotate detent will cause bad horizontal alignment because the detent will not positively position the typehead.

On machines equipped with level 1 detent guide, this adjustment can be made with the tilt ring off of the machine. Loosen the front guide nut approximately a half turn to make sure that it will not interfere while adjusting the rear guide. Remove the rotate detent spring and adjust the rear rotate detent guide until a very slight amount of friction exists as the rear tip of the detent is moved up and down. It should be noted that the rear guide is on an angle and the closer the detent moves to the tilt ring, the tighter it will be wedged. Reconnect the rotate detent spring and adjust the front guide adjusting nut until it stops the rotate detent from being pulled to the bottom position by the rotate detent spring, then loosen the nut until the detent moves into place.

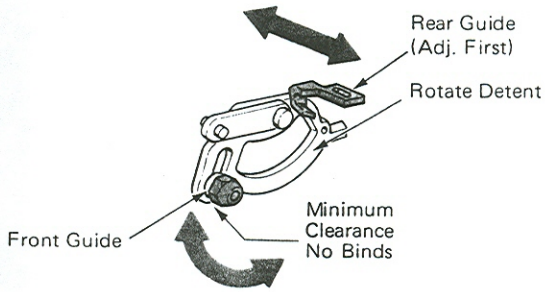

(Level 1)

NOTE: If you removed the tilt ring, do not reinstall at this time.

On machines equipped with the level 2 detent guide, the tilt ring can remain in the machine while making this adjustment. Loosen binding screw, then retighten lightly. Move the detent guide left or right until minimum side play and no binds exist between the rotate detent and the guide. Tighten the binding screw. The front guide is adjusted by the same procedure as the level 1 detent guide.

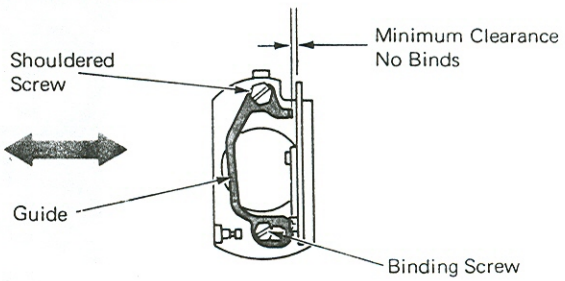

(Bottom View)
(Level 2)

8. *Tilt Detent* – Adjust the guide screw and pivot screw so that the tilt detent pivots freely about the pivot screw with no side play. To do this, loosen both the pivot screw and the guide screw and disconnect the tilt spring and the rotate detent spring.

   Adjust the guide screw so that no side movement is allowed when the tilt detent lever is operated past the guide screw. Adjust the pivot screw until it produces a very slight amount of friction on the tilt detent lever and tighten the locknut. Reconnect the tilt and rotate detent lever springs.

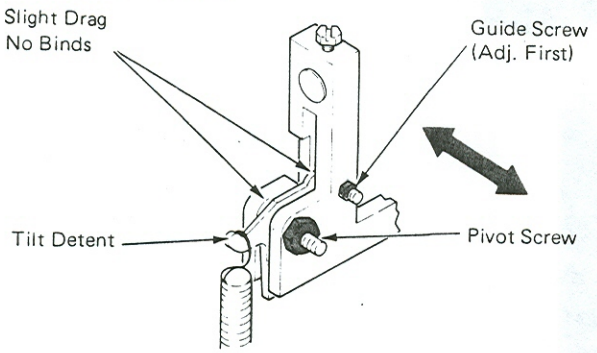

9. *Tilt Ring* – Adjust the pivot pins so that the tilt ring is centered in the yoke with no side play.

   NOTE: On machines before the gearless tilt mechanism, caution should be taken to ensure that the tilt sector gears are properly matched when the tilt ring is installed. The rear tooth of the tube section gear should enter the second notch of the tilt ring sector gear.

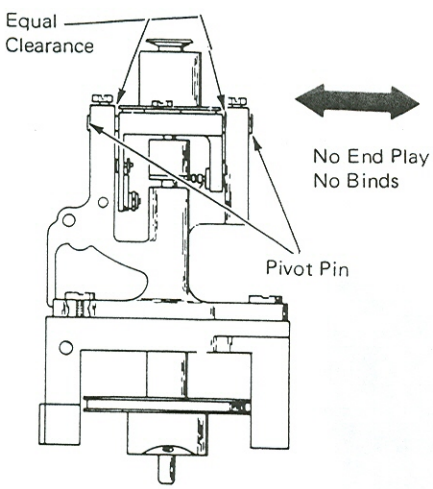

Gearless Tilt Mechanism

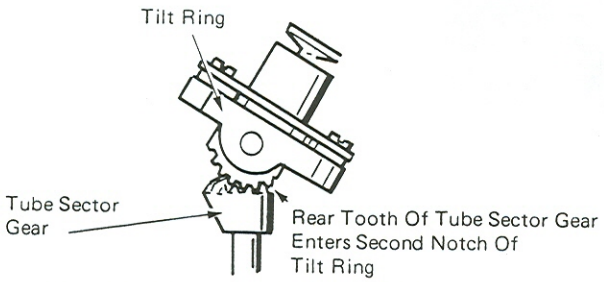

Gear Tilt Mechanism (Right Side View)

10. *Detent Cam Follower* – Adjust the detent cam follower mounting bracket to satisfy the following conditions:

    a. Front to rear for a clearance of .005"-.015" (0.13-0.38 mm) between the print sleeve and the end of the pin on the cam follower.

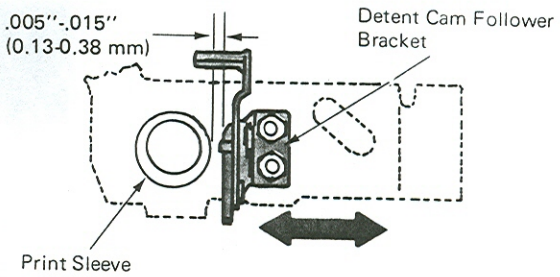

Front-To-Rear Adjustment (Right Side View)

    b. Up or down so the rotate detent just begins to leave the typehead when the typehead has moved .020"-.040" (0.51-1.02 mm) away from the print position (high point of the print cam). Use a tilt 2, rotate 0 character to observe this.

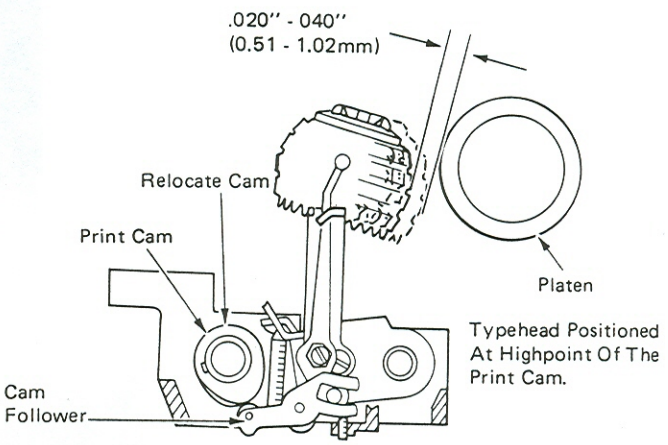

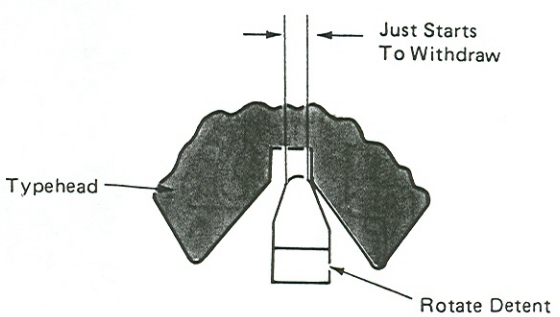

To get this condition, position the top of the cam follower so it is in line with the No. 1 line on the Hooverometer with the Hooverometer resting on the shoulder of the detent cam. Readjust as necessary to get the condition specified.

NOTE: Machines equipped with a roller on the detent cam follower should be positioned so the bottom surface of the pin is in line with the No. 1 line.

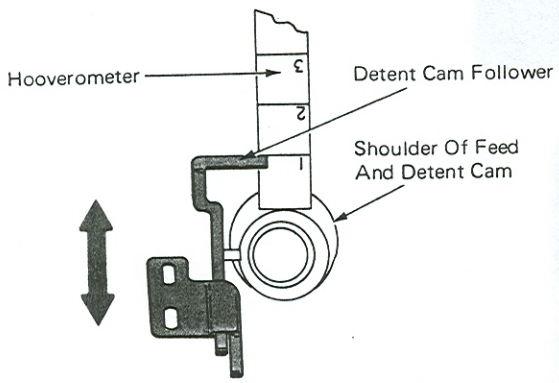

Vertical Adjustment (Left Side View)

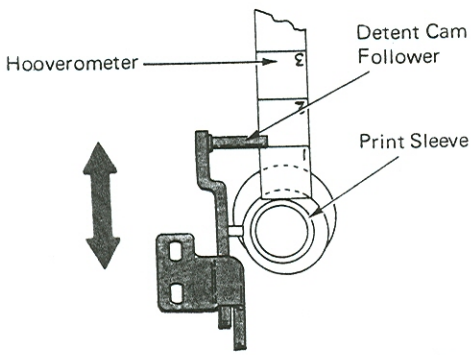

Roller Detent Cam Follower (Left Side View)

11. *Detent Skirt Clearance* – Adjust the detent cam and the detent actuating lever to satisfy the following conditions:

    a. With the detent cam follower on the low point of the cam, adjust the ribbon feed/detent cam left or right for .001"-.010" (0.03-0.25 mm) clearance between the detent moving lever and the detent cam follower roller. Make sure that the tilt and rotate detents are fully bottomed.

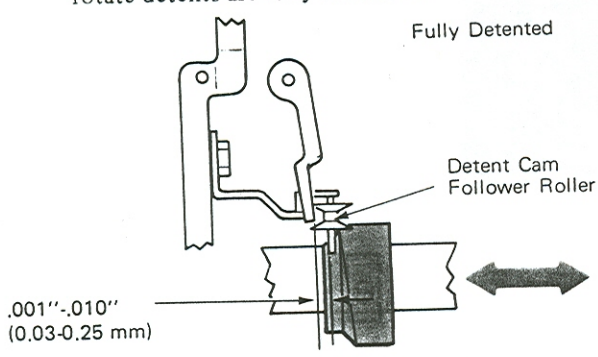

(Levels 1 & 2) (Top View)

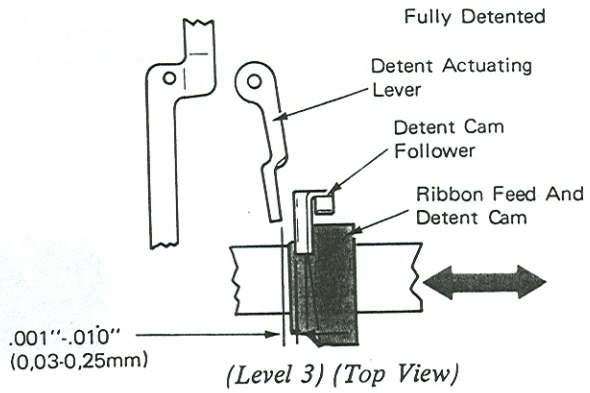

(Level 3) (Top View)

    b. With the cycle shaft at rest and the typehead manually held at the tilt two position, adjust the detent actuating lever support screw up or down for .020"-.035" (0.51-0.89 mm) clearance between the detent and the teeth on the typehead skirt.

    NOTE: These two adjustments may affect each other and both should be adjusted to get the correct clearances.

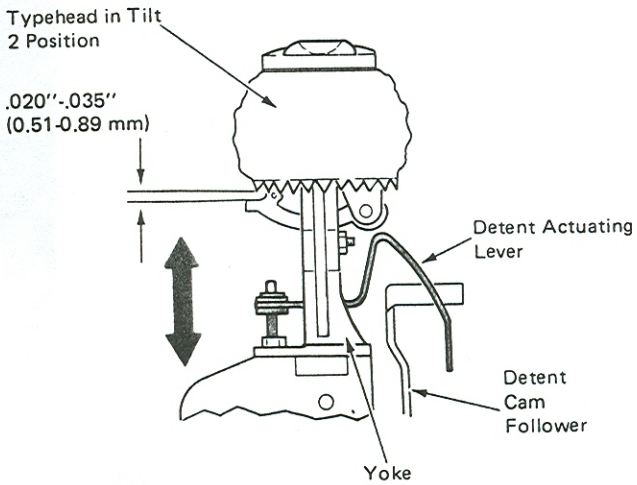

(All Levels) (Left Side View)

CHARACTER SELECTION OPERATIONAL THEORY

The purpose of the character selection mechanism is to position the typehead to print the desired character or symbol (Figure 1). At rest, the position of the typehead is such that the center character of the upper band is in the print position. If any other character is desired, the typehead must be tilted and/or rotated.

The character selection mechanism consists of two sections: tilt selection and rotate selection. These mechanisms transfer motion through their tape systems to tilt and rotate the typehead. The keyboard (see Keyboard Operational theory) starts the selection for the amount of tilt and rotate motion needed for each character.

The components of the character selection mechanism covered in this section tilt and rotate the typehead to the approximate character position. This is referred to as coarse alignment. Further positioning and locking of the typehead before printing is referred to as fine alignment and is covered in the Fine Alignment Section of this manual.

The coarse alignment adjustments can be made with the rotate selection adjustment tool or the typehead. Both procedures are discussed later in this section.

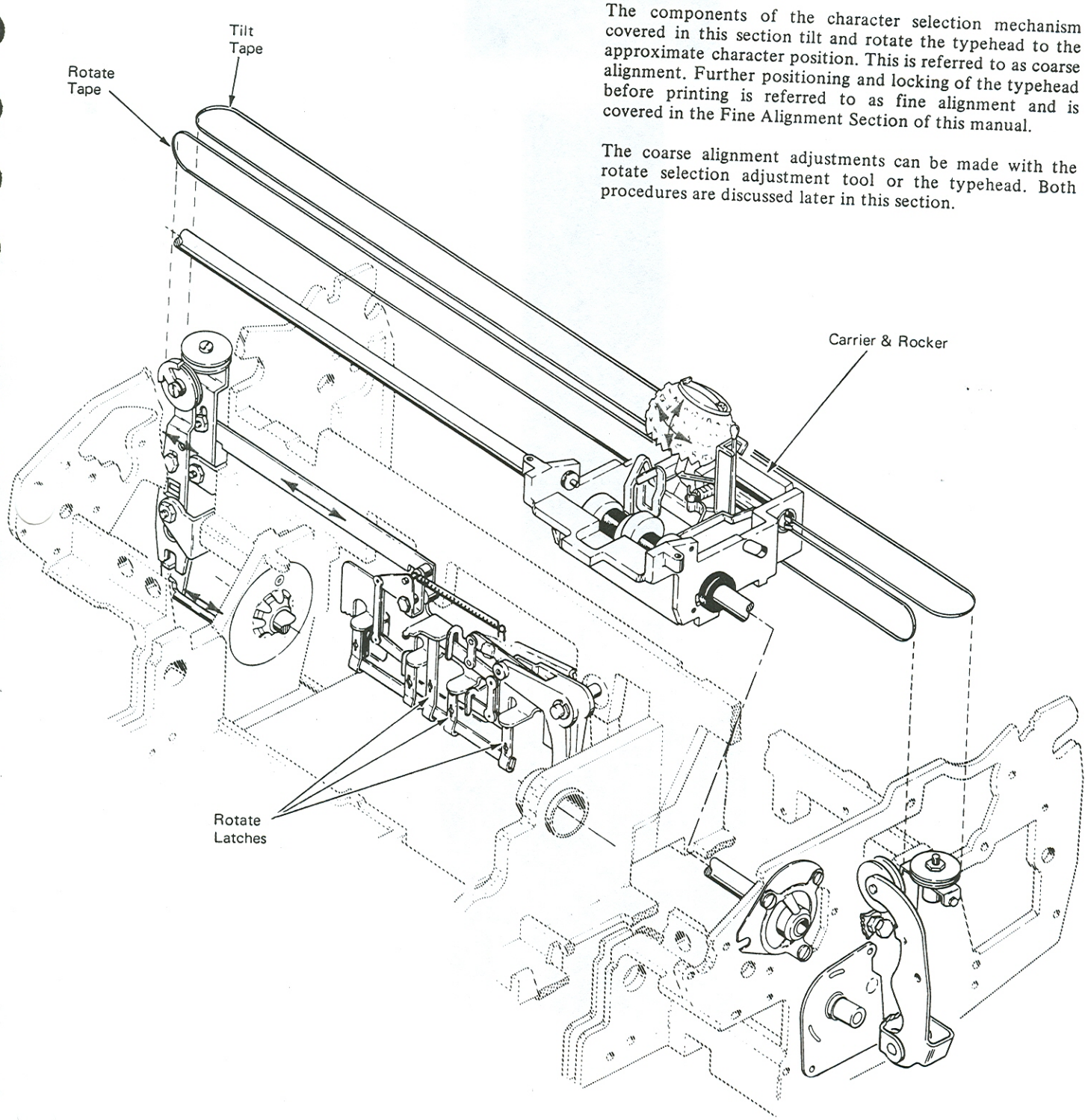

Figure 1 – Character Selection

CYCLE SHAFT AND LATCH BAIL

Drive is transmitted to the tilt and rotate mechanisms through three cams on the cycle shaft, the positive latch bail and the negative latch bail (Figure 2). The two positive cams operate together to control the positive latch bail. The negative cam controls the negative latch bail.

The positive latch bail pivots on the bail shaft at the front. Located at each side of the latch bail is a cam follower roller. An extension spring, at the rear of the latch bail, applies constant upward pressure to hold the follower rollers against the cycle shaft cams. Each time the cycle shaft operates, it rotates 180 degrees and the bail is forced down at the rear. Attached across the rear of the latch bail is the bail plate. The tip of the tilt and positive rotate latches are held at rest under the bail plate by extension springs.

The negative latch bail differs from the positive latch bail in that it rises when the cycle shaft rotates, but only if the negative 5 latch is pulled forward. This will be discussed later in this section.

The selector latches, which are components of the rotate and tilt mechanisms, determine how much rotate and tilt motion the typehead will receive. The two latches to the left control the tilting of the typehead, while the four on the right control the rotation of the typehead.

If the tilt and positive rotate selector latches remain to the rear, under the bail plate, they will be pulled down when the positive latch bail is operated. If any latch is held forward, it will not be pulled down during an operation of the latch bail. Pulling the various latches forward is discussed under the Keyboard Operational Theory Section.

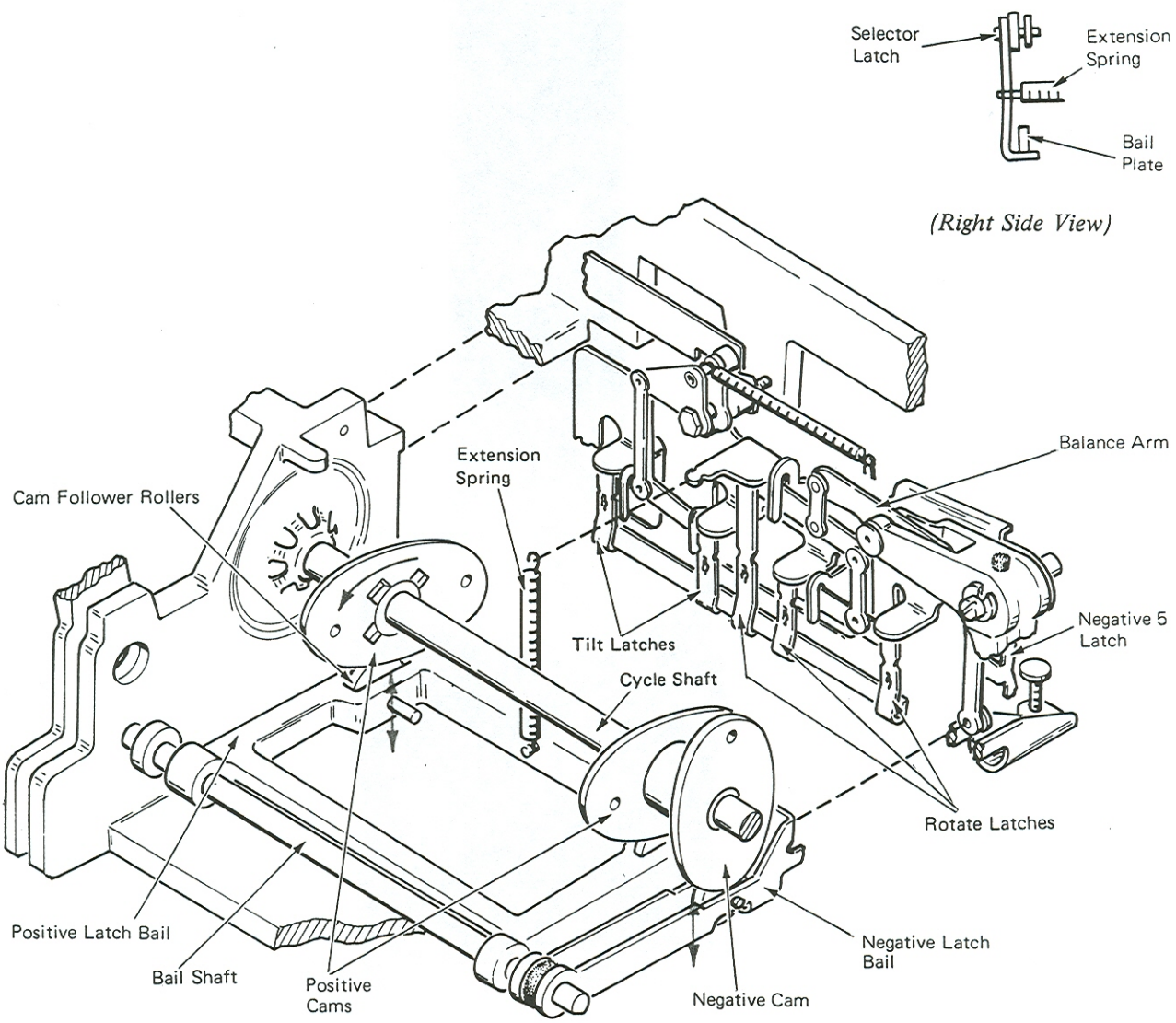

Figure 2 – Cycle Shaft And Latch Bail

TILT MECHANISM

The purpose of the tilt mechanism is to position the typehead vertically to any of the four character bands. This is done by transferring motion from the latch bail through a latch assembly, tilt arm, tilt tape, tilt bellcrank and a tilt ring to tilt the typehead.

TILT DIFFERENTIAL

Two tilt latches are attached at each end of a short lever by ball rivets (Figure 3). The ball shape of the rivets allows the latches to pivot in all directions. The lever is attached by a double vertical link to a bellcrank. The bellcrank pivots on a stud at the top of the differential bracket The connection of the double vertical link is not in the center of the lever, but is to the left so that one tilt latch receives two times the motion of the other.

A horizontal link connects the top of the bellcrank to the tilt arm. Operation of the bellcrank moves the tilt arm to the left to pull on the tilt tape.

The left-hand tilt pulley is mounted to the tilt arm on a ball shoulder pivot screw. This allows the pulley to remain horizontal when the position of the tilt arm changes. It must remain horizontal to prevent the tilt tape from coming off the pulley.

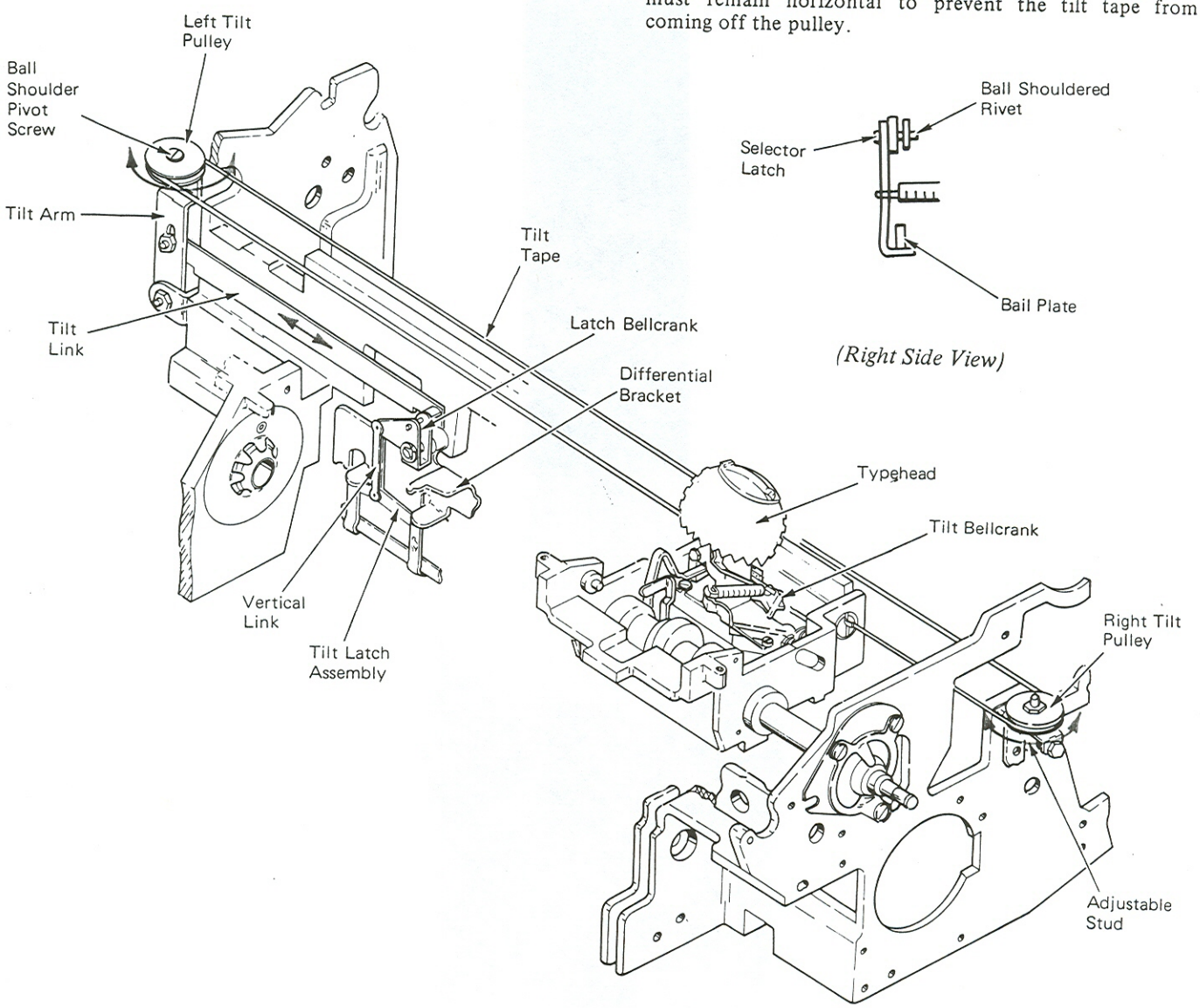

Figure 3 – Tilt Selection Mechanism

GEARLESS TILT (LEVEL 2)

Mechanical motion of the tilt differential is transferred to the typehead through the tilt tape (Figure 4). The tilt tape is connected to the tilt bellcrank on the rocker assembly. It extends to the left around the tilt arm pulley, back to the right around the right-hand tilt pulley, and is attached to the right side of the carrier. This arrangement allows left-to-right movement of the carrier without changing the tilt position of the typehead.

The right-hand tilt pulley is moved for adjustment only. The tilt arm pulley moves with the tilt arm. Movement of the tilt arm to the left pulls on the tilt tape, rotating the tilt bellcrank and causing the typehead to tilt.

GEAR TILT (LEVEL 1)

The level 1 mechanism uses two sector gears, a tube, and a pulley to control the tilt ring (Figure 4). As the tape is pulled, it rotates the tilt pulley which rotates the tube. A gear is mounted to the tube and is engaged with the tilt ring gear. Therefore, when the tube rotates, the tilt ring tilts.

TILT RING

Mechanical motion is transferred from the tilt tape and bellcrank through a link to the tilt ring (Figure 4). The tilt ring pivots on two pins between the yoke arms. A pull on the tilt tape causes the tilt ring to pivot about the pins, tilting the typehead. Because the typehead rests with the upper band of characters in the print position, all tilt operations are upward from the rest position. The tilt ring is restored to rest by an extension spring which connects to the tilt bellcrank.

NOTE: The tilt ring is discussed further in the Fine Alignment Section of this manual.

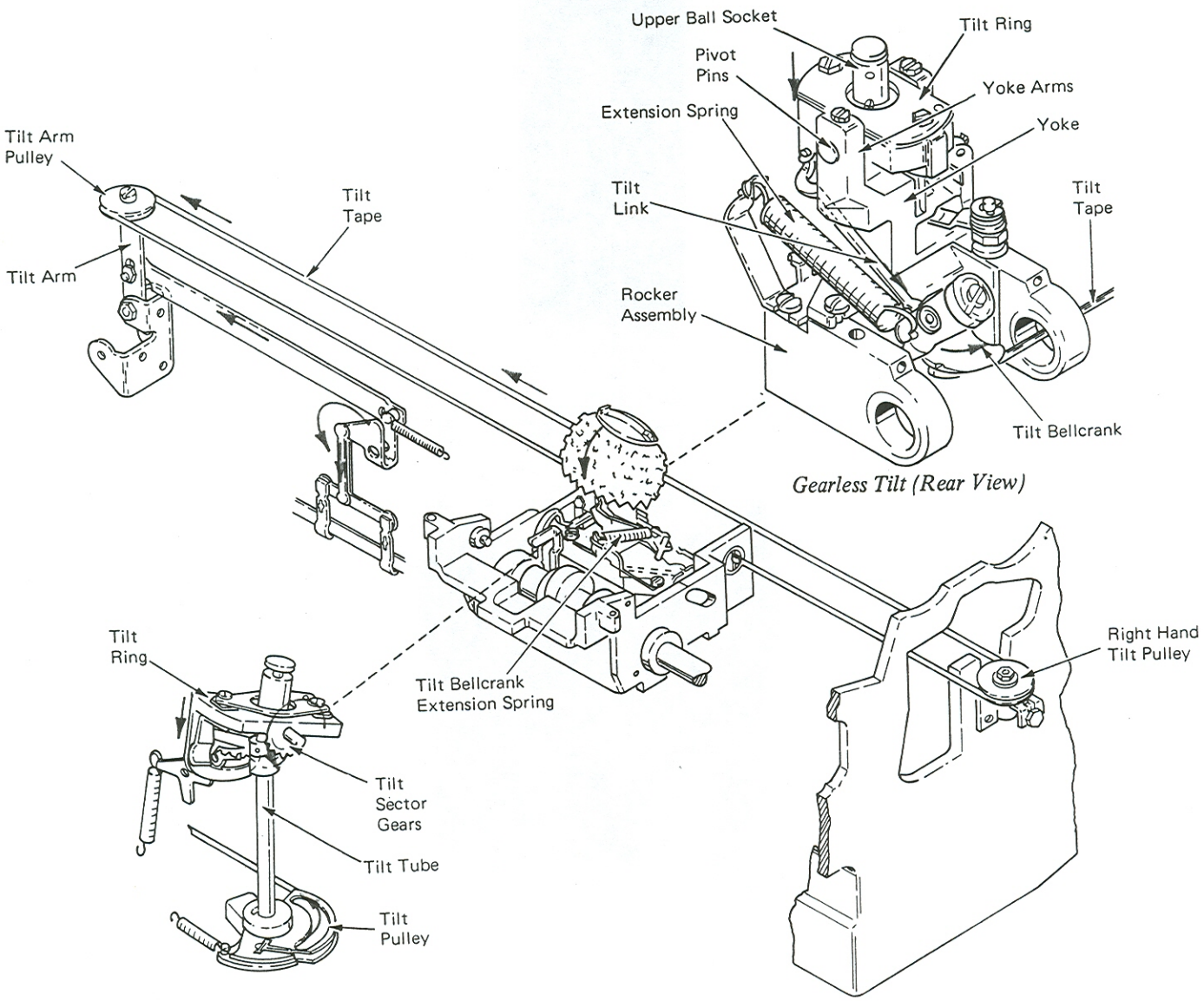

Figure 4 – Tilt Tape System

TILT 1 OPERATION

The tilt arm is rotated by a pull on the tilt latches. When the tilt 2 latch is held to the front while the tilt 1 latch remains to the rear, only the tilt 1 latch is pulled down by the positive latch bail (Figure 5). The link from the lever is then pulled to operate the tilt mechanism. This causes the typehead to tilt a distance of one band of characters, and places the second band from the top in the printing position.

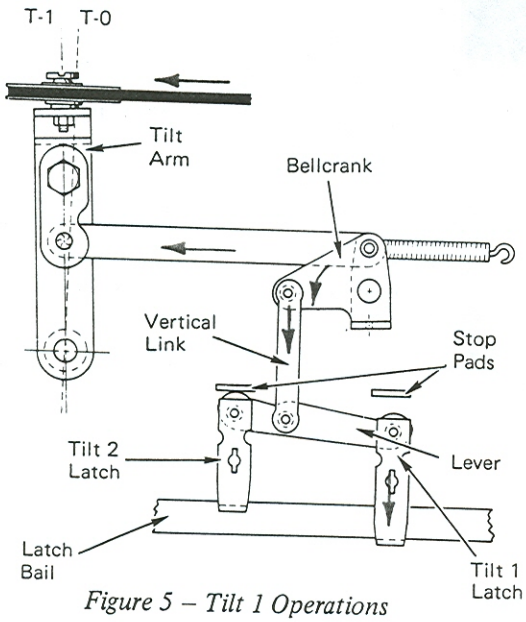

Figure 5 – Tilt 1 Operations

TILT 2 OPERATION

The same type of action occurs if the tilt 2 latch is pulled down by the latch bail while the tilt 1 latch is held forward.

Operating only the tilt 2 latch (Figure 6) develops enough movement to cause the typehead to tilt a distance of two bands of characters. The third band is then in the printing position.

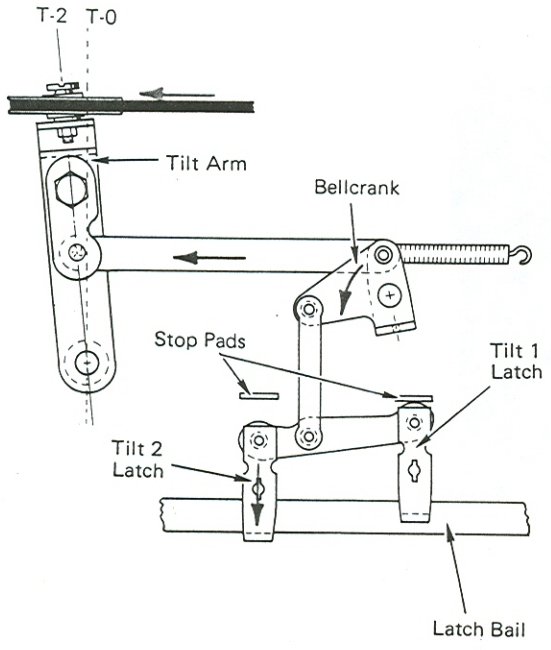

Figure 6 – Tilt 2 Operation

TILT 3 OPERATION

When both latches remain to the rear under the latch bail (Figure 7), both are operated. This causes the double vertical link to receive the same motion as the latches, resulting in three character bands of tilt. The fourth band is then in the printing position.

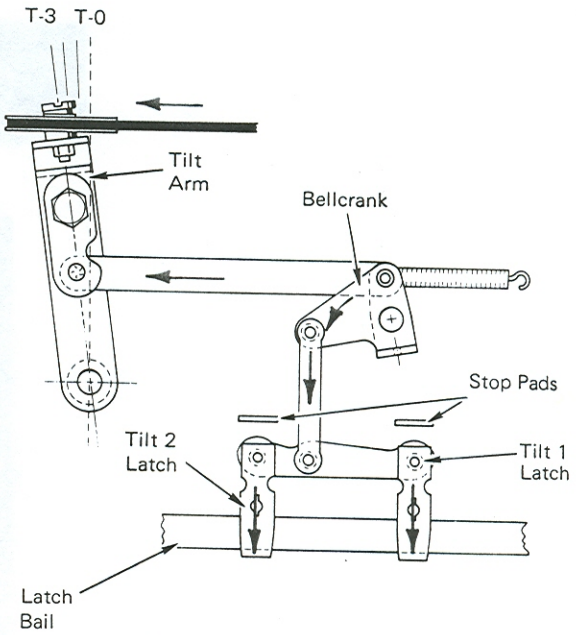

Figure 7 – Tilt 3 Operation

ROTATE MECHANISM

The purpose of the rotate mechanism is to position the typehead to any of the eleven rotational positions. The rotate mechanism is similar to the tilt mechanism except more latches and levers are required. Motion is transferred through the latch assembly, balance lever, rotate bellcrank, rotate link, rotate arm, rotate tape, rotate pulley, rotate shaft and the dog bone to rotate the upper ball socket (Figure 8). The typehead is keyed to the upper ball socket and will rotate when the upper ball socket rotates.

ROTATE DIFFERENTIAL

Rotate selection is done by four latches. Each latch supplies a different amount of rotation. Various combinations of these latches position the typehead to one of the eleven rotational positions. Each latch has a rotational value. They are from left to right, R2A, R1, R2 and rotational positions 4, 5 and negative 1.

Rotation of up to five characters is required on either side of the typehead rest position. Latches R1, R2 and R2A provide 1, 2, 3, 4 and 5 positions of counterclockwise or positive rotation, determined by the combination operated. Those latches not needed are pulled forward by the keyboard selector interposers (not shown). The negative 5 rotate latch rotates the typehead five units in the clockwise or negative direction. Positions of less than five units negative rotation are selected by including one or more positive latches with the negative 5. The negative 5 latch, however, must be pulled forward when negative rotation is required.

ROTATE TAPE SYSTEM

The rotate tape operation is similar to the tilt tape operation; however, the rotate tape transfers motion to rotate the typehead (Figure 8). The rotate tape is connected to the rotate pulley in the rocker, guided through the left side of the carrier, extended to the left around the rotate arm pulley, back to the right around the shift arm pulley, and connected to the right side of the carrier.

NOTE: The shift arm pulley moves only during a shift operation. (For more information on shift operation, refer to the Shift Section of this manual.)

When the rotate arm is moved away from the side frame, the rotate tape is pulled rotating the typehead in a counterclockwise direction. When the rotate arm is moved toward the side frame, the typehead is rotated in the clockwise direction by allowing the rotate tape to wind around the rotate pulley under rotate spring tension.

The rotate spring is located below the rotate pulley and is in a fixed cage. The rotate spring cage is held in place by a retainer attached to the rocker casting. The outer end of the spring is attached to the cage and the inner end of the spring is connected to the rotate pulley hub. The rotate spring loads the rotate pulley in the clockwise direction.

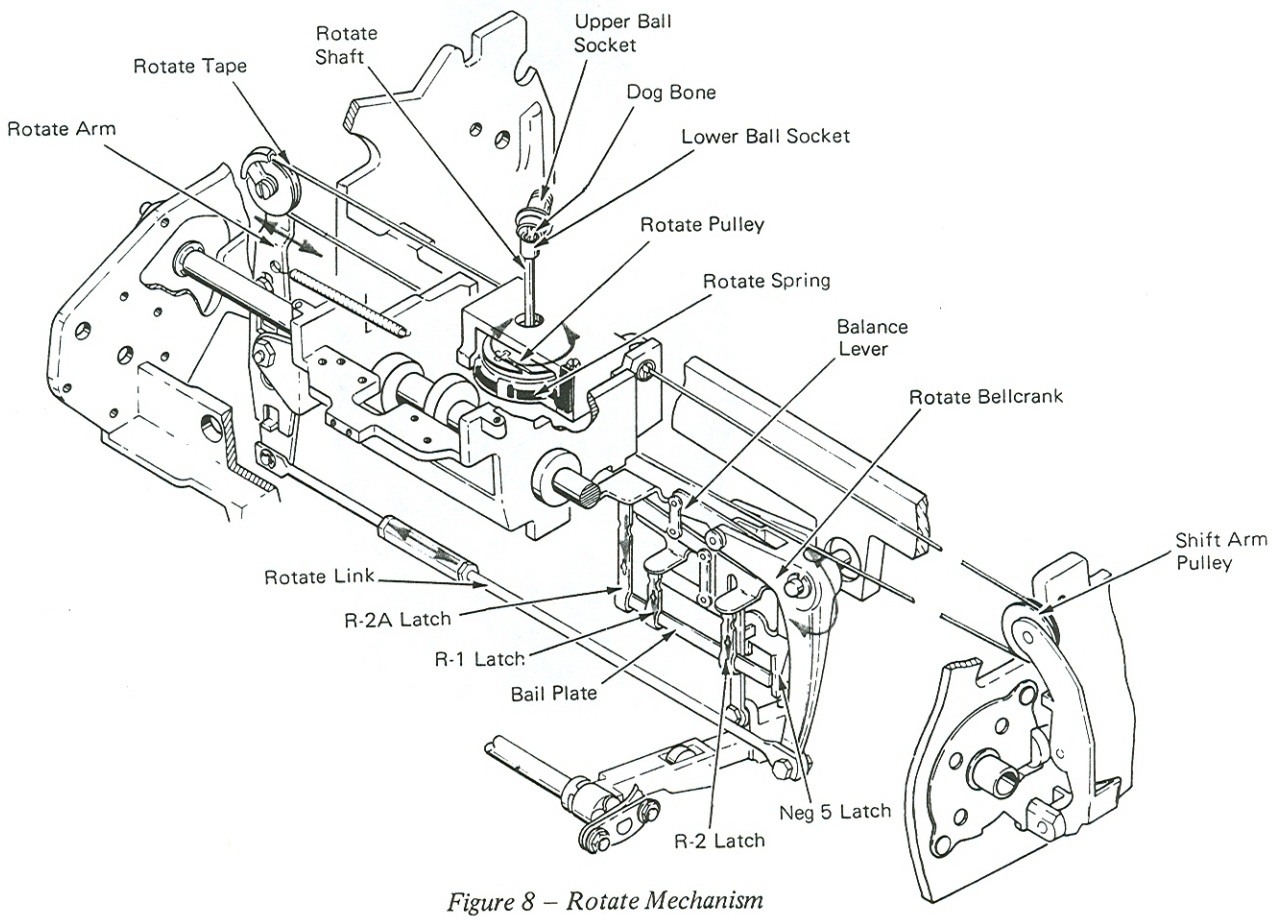

Figure 8 – Rotate Mechanism

POSITIVE ROTATION

The three selector latches involved in positive rotation are those to the far right under the positive latch bail. They are from left to right, R2A, R1 and R2.

The R1 latch is used for one-character rotation and the R2 latch for two-character rotation. With the R1 and R2 latches combined, as shown in Figure 9, a positive 3 rotate character will be selected. The R2 and R2A latches are operated for a four-character rotation. A five rotate character is received by pulling down the R1, R2 and R2A latches.

A balance lever at the center of the rotate differential is connected to the horizontal arm of the rotate bellcrank. The right end of the balance lever is held in place during positive rotation. A downward pull at the left end causes the rotate bellcrank to rotate counterclockwise. The rotate link connects the bottom of the rotate bellcrank to the bottom of the rotate arm. Counterclockwise rotation of the bellcrank causes the rotate arm to pivot about the fulcrum point and pull on the rotate tape.

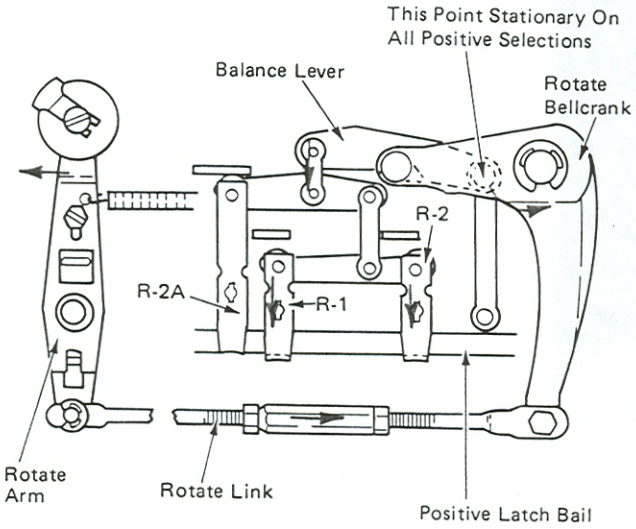

Figure 9 – Positive Three Rotate Operation

NEGATIVE ROTATION

Since positive rotation is performed by operating the rotate bellcrank counterclockwise, it follows that operating the bellcrank clockwise will rotate the typehead in the negative direction.

In order for the bellcrank to rotate clockwise, the right end of the balance lever must be raised. The right end of the balance lever has a flat link connection to the negative latch bail (Figure 10). The negative latch bail is a single arm located under the cycle shaft and pivots on the bail shaft. The bail has a cam follower roller located about the center of the bail. At rest, the bail is held down (inactive) by the high point of the right-hand cam on the cycle shaft. When the cycle shaft rotates and the negative latch bail is allowed to rise, the right end of the balance lever rises to allow clockwise operation of the rotate bellcrank.

The high point of the right-hand cam is 90 degrees from the high point of the other two cams. This ensures that when the positive latch bail is driven DOWN to the active position, the negative latch bail can be UP in the active position.

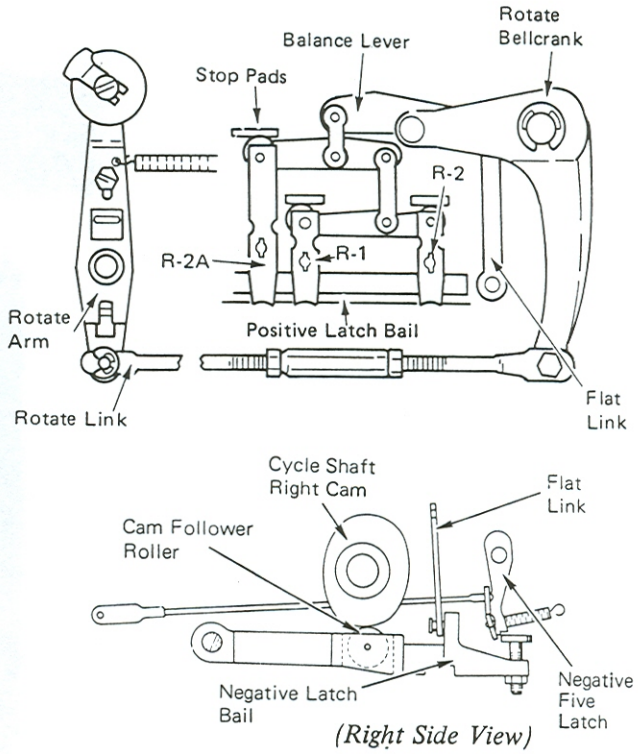

Figure 10 – Negative Latch Bail (At Rest)

The negative latch bail is prevented from rising during a positive rotate operation by the negative five latch (Figure 11).

The latch is mounted to the differential bracket and pivots front-to-rear. In the rest position, the latch is positioned above the head of an adjustable screw at the rear of the negative latch bail. During a positive rotate operation, as the cycle shaft begins to rotate, the bail moves up slightly and is stopped by the negative five latch. The slight amount of upward movement is allowed by the adjustment of the negative five latch screw and does not affect the positive rotate selection.

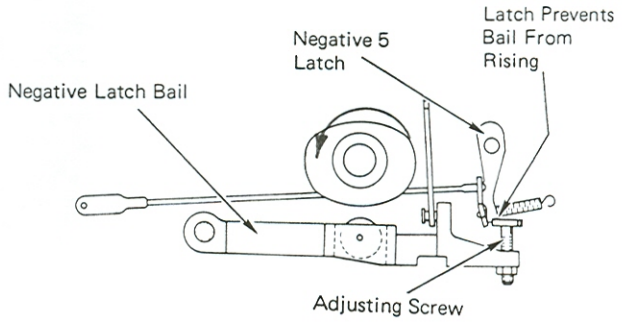

(Right Side View)
Figure 11 – Negative Latch Bail During Positive Rotate Cycle

When the latch is pulled forward, the bail is allowed to rise (Figure 12). The force which raises the bail is applied by the rotate pulley spring and the extension spring attached to the rotate arm.

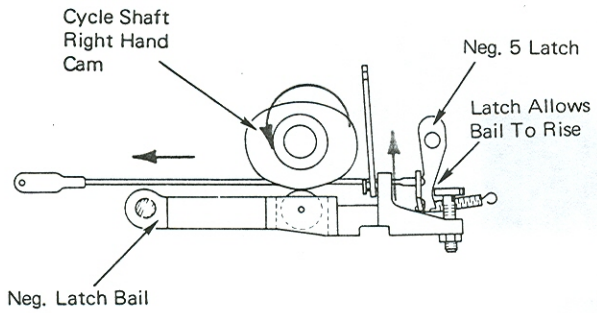

(Right Side View)
Figure 12 – Five-Unit Bail During Negative Rotate Cycle

NEGATIVE THREE ROTATE

Movement of the negative latch bail from the latched-home point to the low point of the cam allows enough clockwise movement of the rotate bellcrank to allow a five-character negative rotation of the typehead. If less than five units of negative rotation is desired, it is necessary to pull down on the left end of the balance lever as the right end goes up. This reduces the amount of clockwise movement of the rotate bellcrank. Operating one or more positive rotate latches down while allowing the negative latch bail to rise, provides different amounts of negative rotation. The positive R1 and negative five combine to allow a negative four rotation. The positive R2 and negative five combine to give a negative three rotation (Figure 13). The positive R1 and R2 and a negative five operation allows a negative two rotation. And the positive R2 and R2A plus a negative five combination gives a negative one rotation.

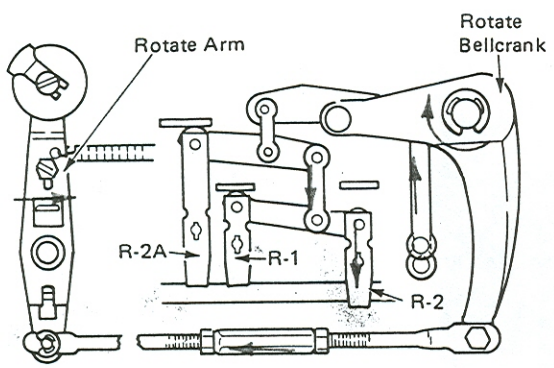

Figure 13 – Negative Three Rotate Operation

NEGATIVE ROTATE CHART

"Selectric": Positive Latch + Negative Bail = Rotate Position

0	-5
R1	-4
R2	-3
R1, R2	-2
R2, R2A	-1

TYPEHEAD ROTATION

A clip holds the typehead to the upper ball socket, and a notch inside the typehead fits over a key which is pressed into the upper ball socket. This arrangement ensures that the typehead will rotate when the upper ball socket rotates.

The upper ball socket has a shoulder at the bottom which fits into the tilt ring (Figure 14). The fit is very close yet allows free rotational motion to the upper ball socket. The upper ball socket is held in place by the tilt ring spacer. The spacer is attached directly to the tilt ring and fits over a flange of the upper ball socket. Shims are used between the tilt ring and the tilt ring spacer to allow rotation of the upper ball socket. The shims also limit up and down play.

The bottom of the upper ball socket is hollow and forms the socket for a ball connection. A dog bone shaped ball fits into the socket over a pin that extends through the socket. The lower end fits over a pin in the lower ball socket. The lower ball socket is part of the rotate shaft. The rotate shaft operates directly inside the center of the yoke. Attached near the bottom of the shaft are the rotate pulley and rotate spring.

The two ball socket connections serve as a universal joint to allow the typehead to be rotated and tilted at the same time.

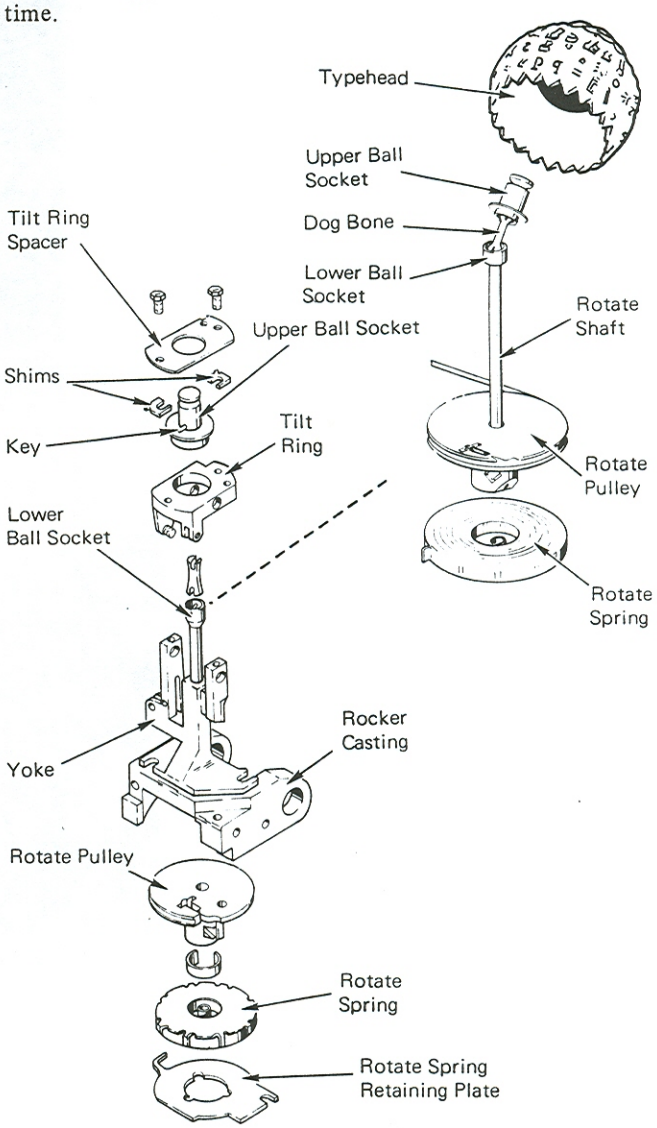

Figure 14 – Typehead Rotation

Any wear in the system will cause the typehead to drift in the negative direction. This is because of the rotate spring applying a constant pressure to the rotate system in a negative direction. Because of this drift, coarse alignment and homing adjustments should be checked each time the machine is serviced (Figure 15).

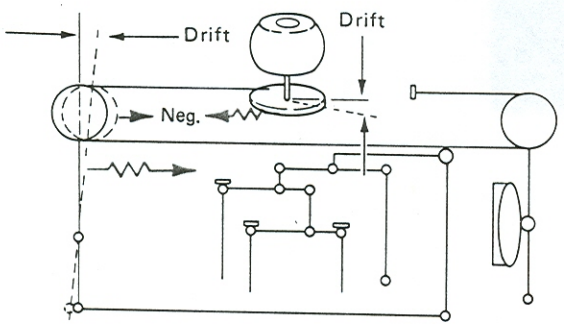

Figure 15 – Rotate System Drift

Early level machines used a wear compensator on the rotate arm (Figure 16). It has been found that drift in the rotate system is very limited and use of the compensator part of the rotate arm is not necessary. To prevent possible problems, the arm should be disabled as described at the end of this adjustment section.

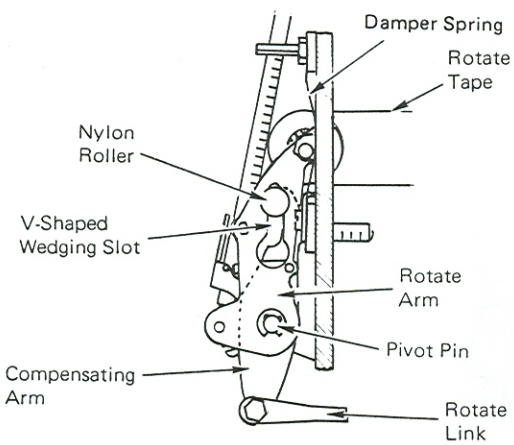

Figure 16 – Basic Components Of The Wear Compensator

Wear potential in the rotate mechanism is the way the rotate mechanism is able to properly align the typehead after a certain amount of wear is felt in the mechanism (Figure 17).

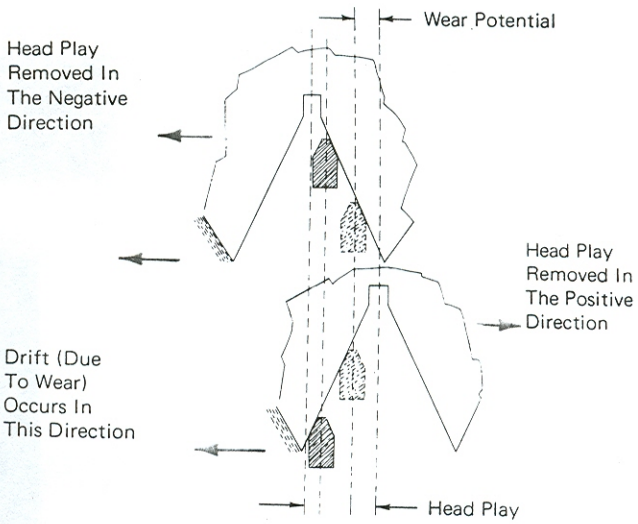

Figure 17 – Wear Potential (Rear View)

A part of the typehead play provides the rotate system with the large amount of wear allowed. To see how this is done let's look at the relationship between head play, homing and bandwidth.

SELECTION OPERATION 96-CHARACTER "SELECTRIC" TYPEWRITER (W.T.)

The 96-character typewriter selection operational theory is nearly the same as the 88-character machine. There are some differences in the parts used. These differences are described in the following text and drawings.

The rotate system on the 88-character machine has 12 rotate selections available (+1 to +5, 0, +5 -5, -1 to -5). Only 11 are used for selection. The +5 -5 is used to adjust the balance.

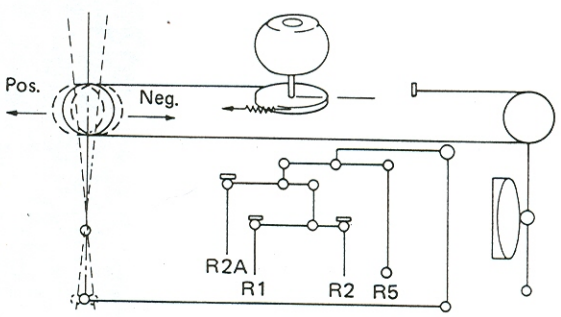

Figure 18 – Rotate Selection

On the 88-character machine the balance between positive and negative rotate direction can be seen by selecting the +5 and -5 position together. In this case the movement of the rotate bellcrank caused by the positive cams is lost by the opposite movement of the -5 unit cam and -5 unit bail; therefore, the rotate bellcrank is left in the same place (Figure 19).

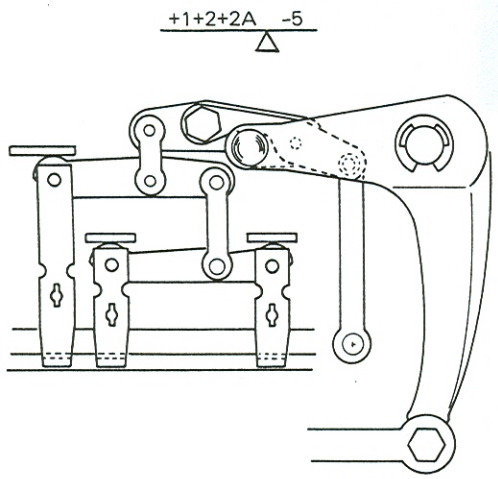

Figure 19 – Rotate Balance

Adding all the positive motion to all the negative motion is now used to get the -1 position on the IBM 96. To make this possible the negative selection cam is reduced only on its low part. This causes a higher movement of the -5 unit bail – now called the -6 unit bail – and the rotate system moves 1 position more in the negative direction (Figure 20). The positions -1 to -5 on the 88-character machine are changed to -2 to -6 on the IBM 96. Therefore, the 12 rotate positions on the IBM 96 are: +1 to +5, 0, -1, -2 to -6.

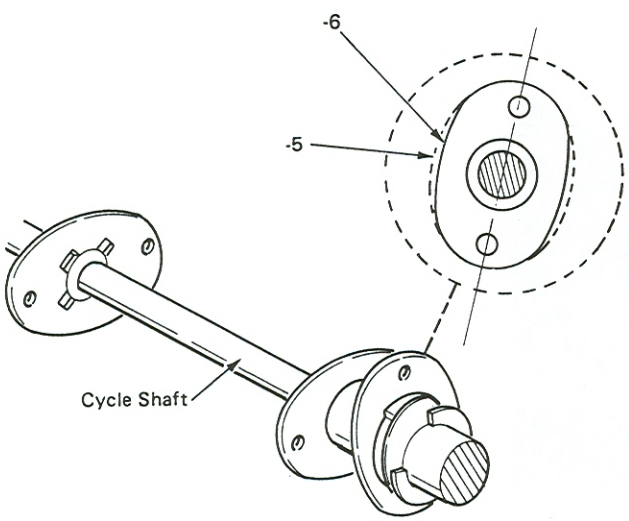

Figure 20 – Cycle Shaft

The rotate arm must move 1 position further to get to the -6 position. Therefore, to prevent the rotate arm from interfering with other parts during -6 operation, it must rest about 1 position more positive than on the 88 character machine (Figure 21).

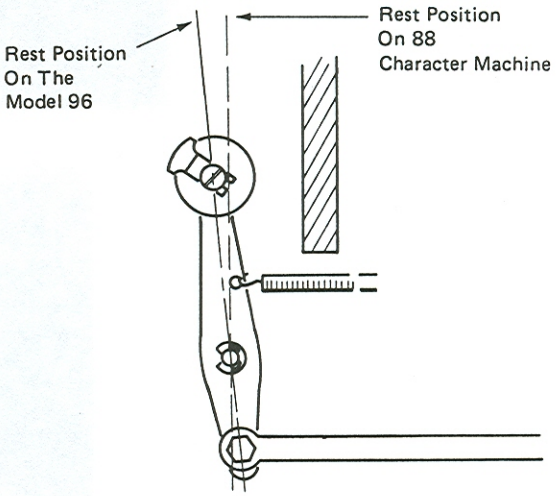

Figure 21 – Rotate Arm

UPPER BALL SOCKET, ROTATE LINK

It is simple to adjust the rotate homing; the upper ball socket is made of 2 parts that are mounted together with a screw (Figure 22). The upper part is called the single lug headholder. It has a lug that fits into the groove in the type element inner tube. The rotate homing is adjusted by loosening the screw and rotating this upper part of the upper ball socket.

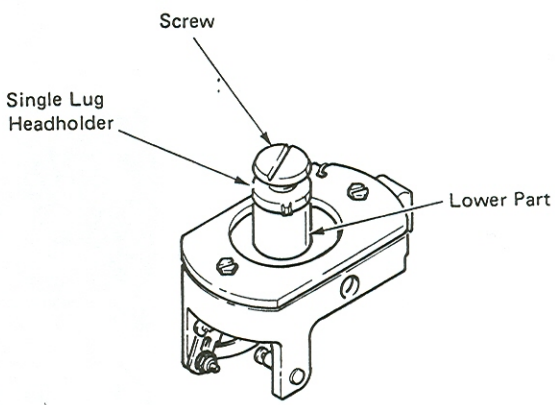

Figure 22 – Upper Ball Socket

Because the rotate homing is made by rotating the upper ball socket, the rotate link is now made of 1 part and the rotate arm rest position is not adjustable (Figure 23).

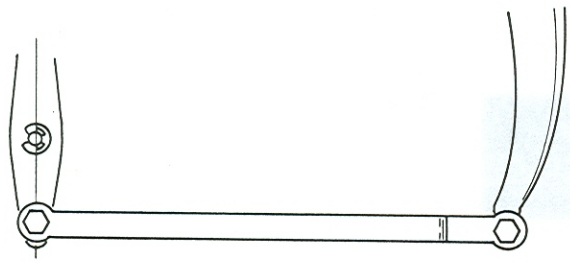

Figure 23 – Rotate Link

TYPEHEAD PLAY

Typehead play is the free motion in the typehead when the machine is at rest. It is due to the ball connection between the upper ball socket and the lower ball socket. The play is .050"-.060" (1.27-1.52 mm) measured at the typehead skirt or slightly less than half the distance between the teeth. The head play is distributed between the positive and negative sides of the typehead notch (Figure 24). The typehead is homed so the rotate detent contacts the side of the notch with the headplay removed in the negative direction, approximately .010"-.020" (0.25-0.51 mm) down the negative side of the notch.

The purpose of this adjustment is to provide maximum wear allowed to the system. Also, this adjustment allows more time to remove the detent before the typehead restores in the positive direction. Breakage in the system would occur if the detent was not removed before typehead movement begins.

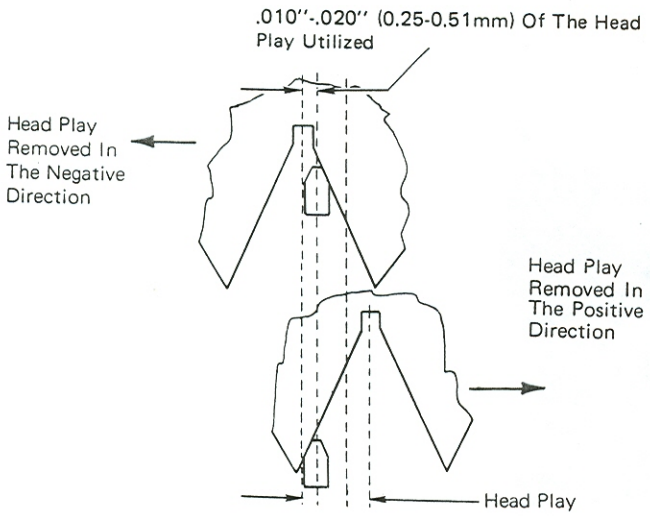

Figure 24 – Typehead Play And Homing (Rear View)

BANDWIDTH

With the head play removed in the negative direction, the most difference between detent entry of one typehead position (Figure 25A) and another typehead position (Figure 25B) is called bandwidth. It is caused by unequal adjustment of the rotate latch stop pads. You will note that we have now used up almost 3/4 of the negative side of the typehead notch.

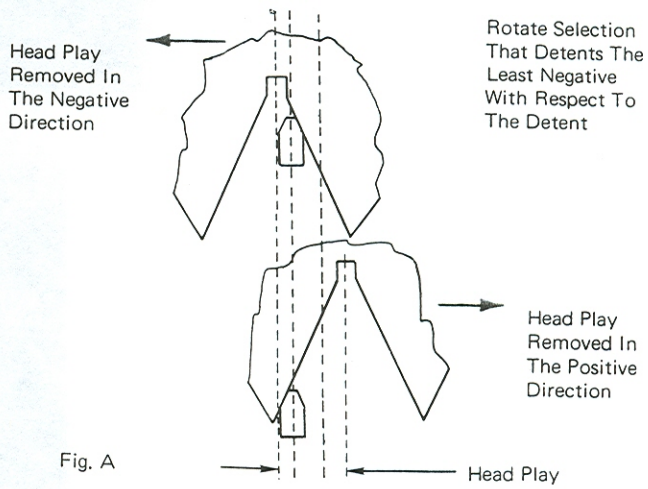

Fig. A

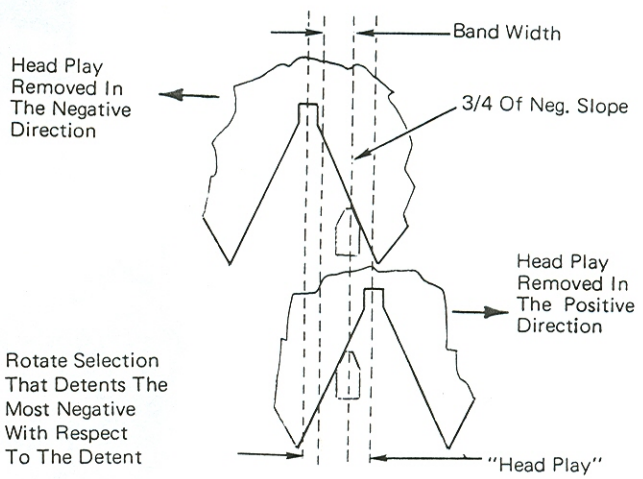

Fig. B

Figure 25 – Bandwidth (Rear View)

When the wear occurs in the system, the typehead drifts in the negative direction with reference to the detent. This causes the headplay and bandwidth to drift in the negative direction with reference to the detent. If this drift is not more than the headplay wear allowed, the detent will continue to fine align the typehead. When the wear allowed is more than the rotate selection that coarse aligns the most negative, the detent will fail to align the detent notch (Figure 26). The detent will fail to bottom causing that character to print out of alignment. The bandwidth and wear allowed must be kept as small as possible.

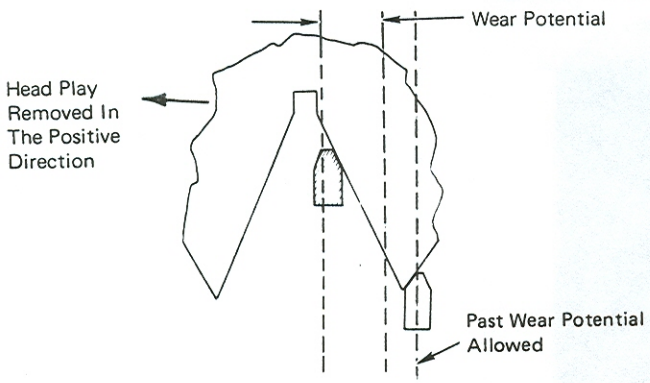

Figure 26 – Past Wear Potential Allowed (Rear View)

VERTICAL ALIGNMENT FAILURES

If there is a vertical alignment failure, first remove the typehead from the machine. Check the detent entry on the "z" and "j." Make sure the tilt ring is detenting properly when the play is removed in the negative direction. Also, be sure to check the entry by removing the play in the positive direction. This will tell if the tilt ring play is correct and, more important, if the detent is hitting on the tip of the notch. If the detent hits on the tip of the notch, the tilt detent will fail to bottom and it will keep the rotate detent from bottoming in the typehead tooth. This will look like a "fine alignment" problem, but it is a coarse alignment problem. If the tilt detent is not hitting the tip of the detent notch but it still fails to bottom, you may have a "fine alignment" problem (Figure 27).

Most problems in the tilt mechanism will show up as a vertical alignment failure on the paper. However, the tilt detent controls the rotate detent. If the tilt detent fails to bottom in the tilt ring, it is possible for the rotate detent to fail to bottom in the typehead. This could cause horizontal alignment failures on the paper.

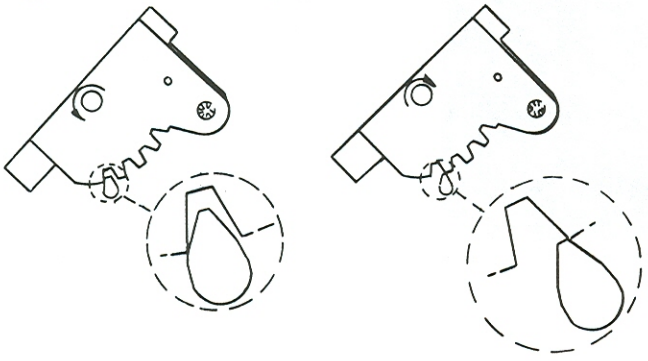

Play Removed In The Negative Direction — *Play Removed In The Positive Direction*

Figure 27 – Tilt Detent Entry (Left Side View)

ROTATE SELECTION ADJUSTMENT TOOL

The rotate tool provides a quick adjustment procedure that makes more exact adjustments possible. It can also be used to determine if a machine is within Engineering specification without a typehead (Figure 28). (This tool is not for use on W.T. 96-character machines.)

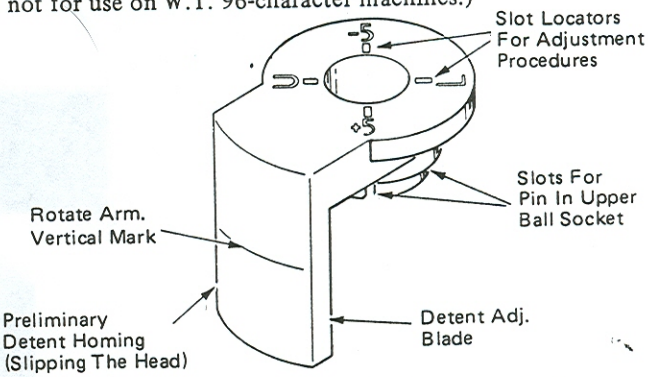

Figure 28 – Rotate Selection Adjustment Tool

HOW TO USE TOOL PROPERLY

To get the proper adjustment with the rotate adjusting tool, the following two conditions must be met:

1. No clearance exists between the blade of the rotate tool and the rotate detent (Figure 29).

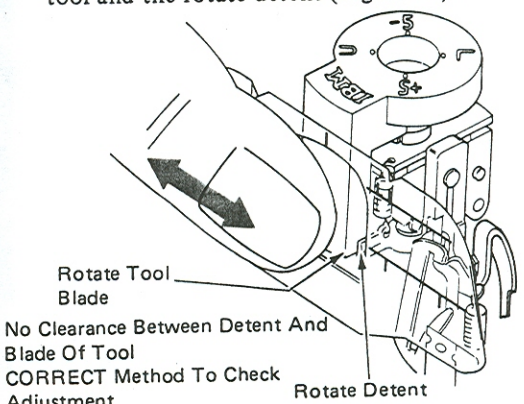

Figure 29 – No Clearance Between Blade And Detent

2. Detent should restore with no binds against the blade of the tool (Figure 30). Do not move the tool when checking this condition.

NOTE: Do not bias the tool in any direction when checking condition No. 2.

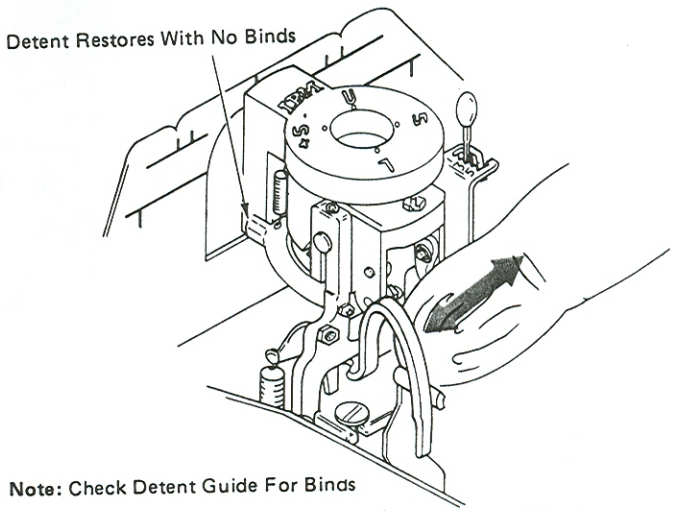

Figure 30 – Detent Restores Against Blade

Since the entry of the rotate detent is controlled by correct bottoming of the tilt detent, it is necessary that the tilt detenting be set up first.

7XX "Selectric" Typewriters equipped with the wear compensator cannot be adjusted with the rotate selection adjusting tool unless the compensator arm is disabled. Use the procedure at the end of the adjustment section.

CAUTION: It is possible for the blade of the tool to bind against the backup shoe on the tilt ring. Therefore, it will be necessary to remove the tool before half cycling the machine for every adjustment.

NOTE: The tool is for use with spring biased (slotted) tilt rings only.

CHARACTER SELECTION ADJUSTMENTS

NOTE: Shift adjustments must be correct before beginning the coarse alignment adjustments. Remove the typehead before beginning adjustments.

1. *Preliminary Timing* – Loosen the print shaft gear and rotate the print shaft so that its key slot is in line with the screw on the left side of the carrier casting. This coarse adjustment makes the detents operate at approximately the right time in the cycle.

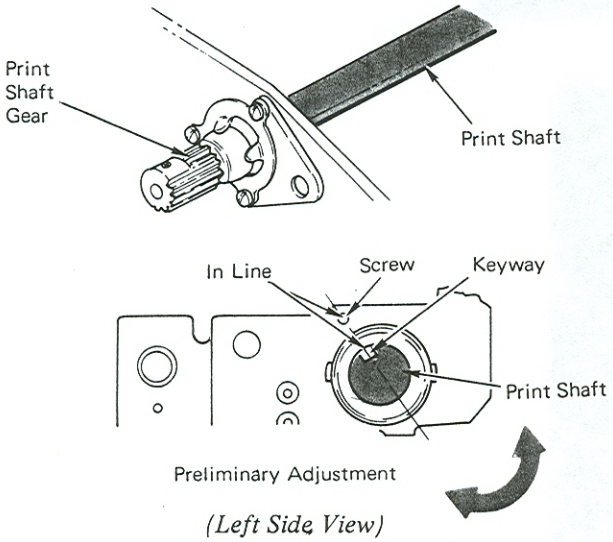

(Left Side View)

2. *Latch Bail Shaft* – Adjust the bail shaft plate so that the bail shaft is parallel to the cycle shaft. Rollers should not clear the cycle shaft by more than .002" (0.05 mm).

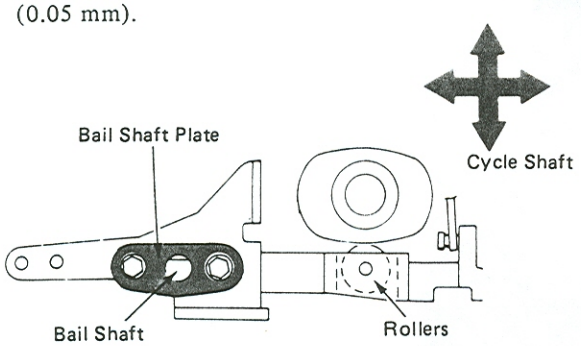

(Right Side View)

3. *Rotate Differential Guides* – Adjust the guides left and right so that the differential link is vertical.

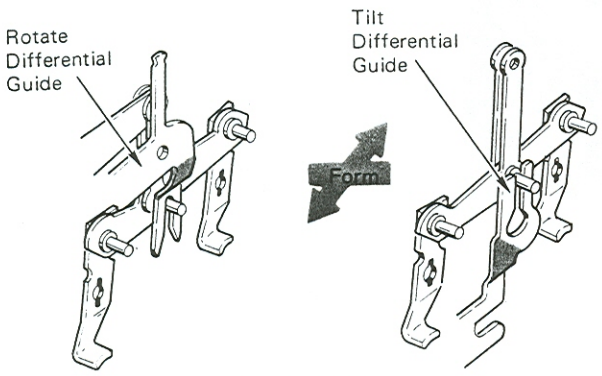

(Right Side View)

4. *Positive Latch Bail Guide* – Adjust the guide to get the following conditions:

   a. Left and right so that the tilt and rotate latches are vertical.

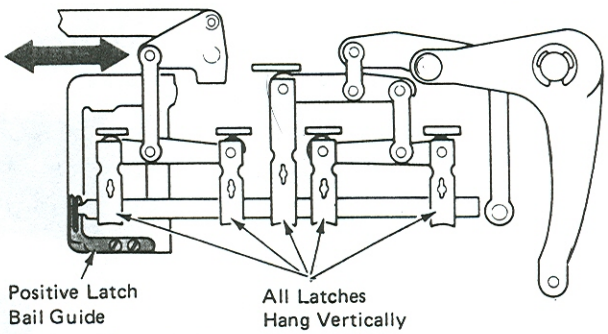

   b. Up and down (with the cycle shaft cams on the high point), so the positive bail lug will have .005"-.015" (0.13-0.38 mm) clearance from the bottom of the guide.

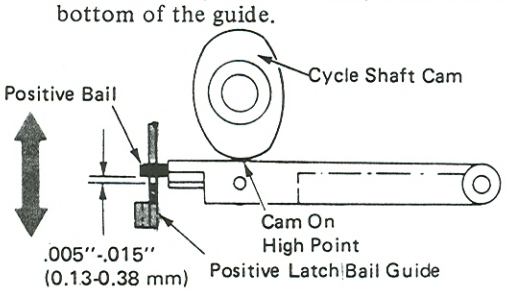

(Right Side View)

5. *Interposer Stop Lugs (Levels 1 And 2)* – Form the selector interposer stop lugs to get .001"-.005" (0.03-0.13 mm) clearance between each latch interposer lug and the selector bail. This adjustment establishes a fixed position for the interposers and will directly affect selector latch timing.

   NOTE: This adjustment does not apply to late level machines. Refer to adjustment 6, Level 3.

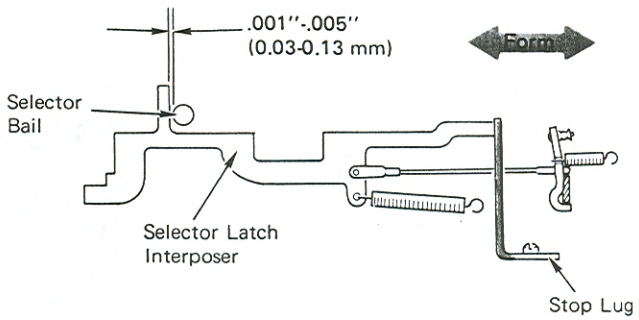

(Level 1 – Right Side View)

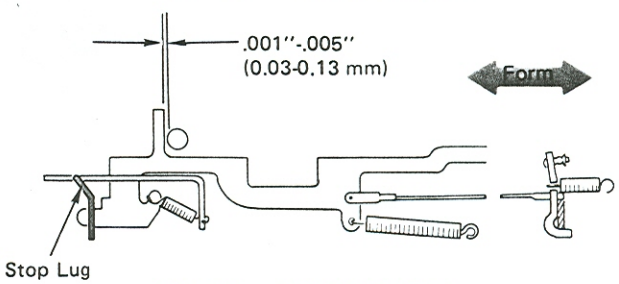

(Level 2 – Right Side View)

6. *Selector Latch Links*

a. *Level 3* – With the machine at rest, adjust the selector latch links so that the links just reach between the selector latches and the selector latch interposers. Then, make the link longer by 1/2 turn.

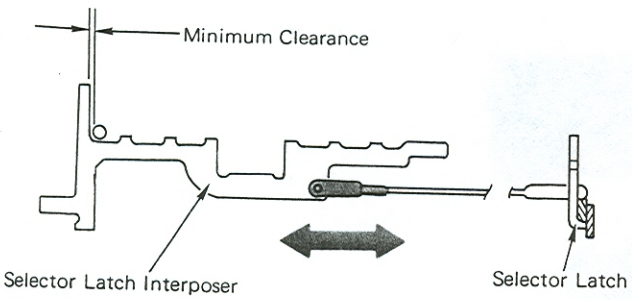

(Right Side View)

b. *Levels 1 And 2* – With the machine at rest, adjust the selector latch links so that the tips of the latches overlap the bail .005"-.010" (0.13-0.25 mm). More or less overlap can cause the latches to pop out from under the bail causing malselection.

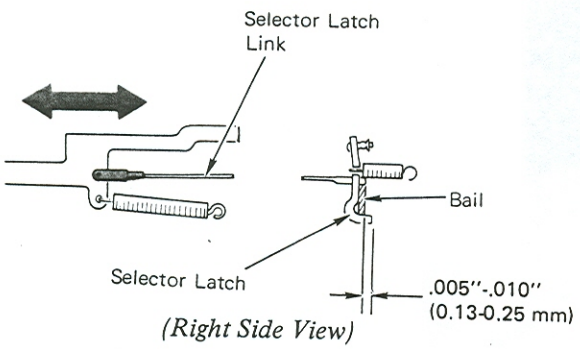

(Right Side View)

7. *Negative 5 Latch Link* –

a. With the machine at rest, adjust the latch link so the link reaches between the negative 5 latch and its interposer. Then make the link longer by 1/2 turn.

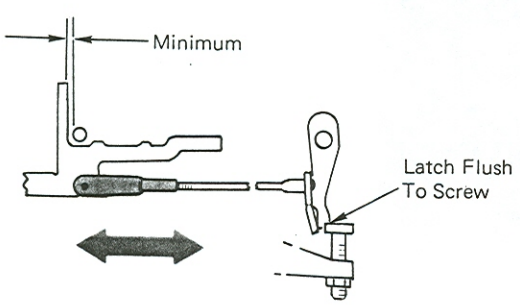

(Right Side View)

b. *Early Level* – With the machine at rest, adjust the negative 5 latch link so that the negative 5 latch will overlap the stop screw head by .050"-.060" (1.27-1.52 mm).

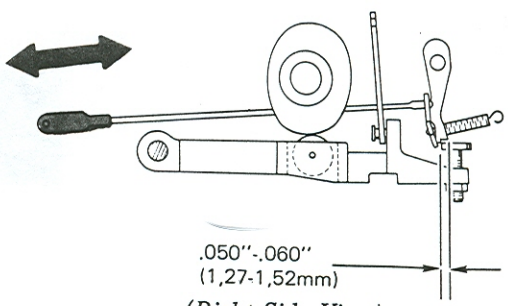

(Right Side View)

8. *Latch Stop Pads* – Form the latch stop pads to get .007"-.010" (0.18-0.25 mm) clearance between the latches and the positive bail with the positive bail on the low point of the cycle shaft cams.

The latches should reset under the bail at the same time.

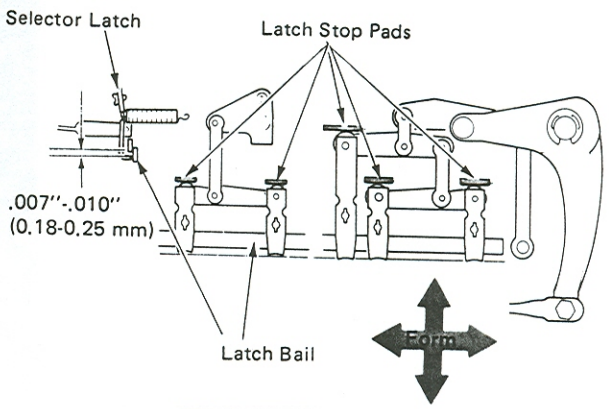

9. *Negative 5 Bail Stop Screw* – With the machine in the rest position, the negative 5 stop screw can be preset by turning it in until it bottoms and then by backing it out 1/2 turn. Ensure the cycle clutch latch pawl is in the window of the cycle shaft.

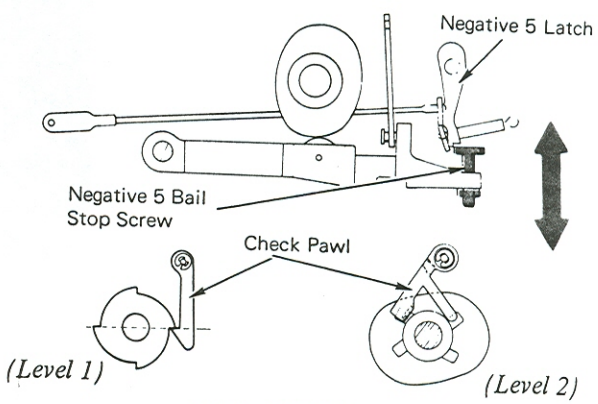

(Right Side View)

10. *Tilt Arm Motion* – Adjust the link up or down on the tilt arm so that the tilt ring will coarse align the same for a "Z" (tilt 0, zero rotate) as it does for a "J" (tilt 3, zero rotate).

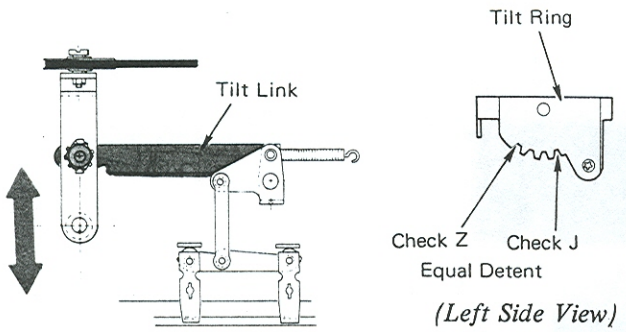

(Left Side View)

11. *Tilt Homing* – With a "Z" (tilt 0, zero rotate) character half cycled and the tilt ring play removed in the negative direction (restoring direction), adjust the right-hand tilt pulley so the rear of the tilt ring will rise approximately .010" (0.25 mm) when the detent is manually allowed to bottom in the detent notch. As a further check, remove the tilt ring play in the positive direction and observe the detent entry on the forward side of the notch. The detent should enter far down the forward side of the detent notch, but not so far that it contacts the tip of the tooth.

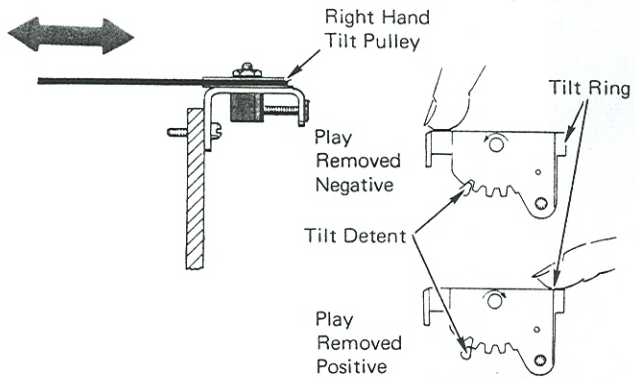

(Left Side View)

12. *Rotate Spring Tension* – Shift the machine into lower case and half cycle an "m" (tilt 2, -5 rotate). Adjust the rotate spring cage until a 1 7/8-2 pound reading is on the spring scale just as the shift arm contacts the stop screw. This is a CRITICAL adjustment. Excessive tension will cause extra wear in the system; not enough tension will not provide the torque necessary for quick lowercase negative rotate operations.

Half Cycled
Lower Case "m" (Tilt 2, Negative 5 Rotate)

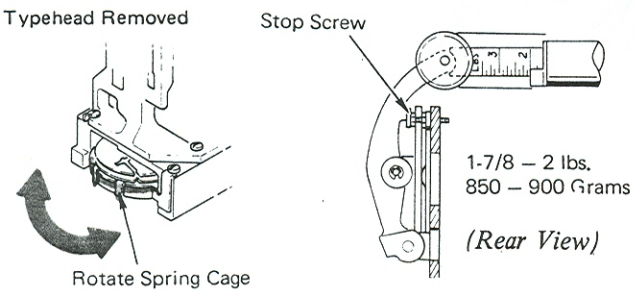

(Rear View)

The rotate adjustments can be made using either of the following adjustment sequences. The first sequence (adjustments 13 through 22) requires use of the Rotate Selection Adjustment Tool. The last sequence (adjustments 23 through 31) requires use of the typehead.

NOTE: For W.T. 96-character machines, use adjustments with typehead.

ROTATE ADJUSTMENTS WITH TOOL

NOTE: When the term "half cycle" is used, the machine may be half cycled with the hand cycle wheel or the dynamic half cycle tool.

13. The compensator arm must be disabled. Use procedure at the end of this section.

14. *Rotate Arm Vertical* – This is a preliminary adjustment and is made by adjusting the turnbuckle on the rotate link. Adjust the link so that the center of the top of the rotate arm is in line with the scribe line on the blade of the rotate tool. Tilt the machine in the service position and observe from the bottom of the machine.

NOTE: Check with machine at rest.

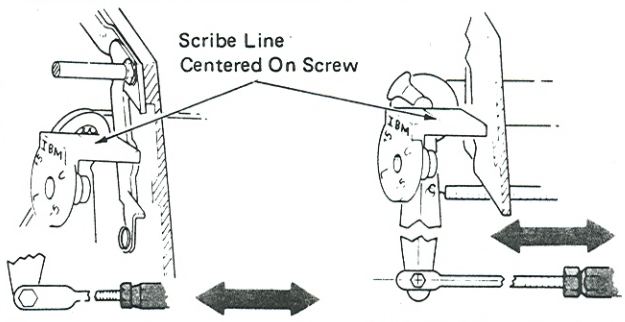

(Compensator Arm) *(Solid And Two Piece Arm)*

15. *Preliminary Homing* – Half cycle an UPPER CASE "I" (tilt 2, +3 rotate) with the carrier positioned over the cycle shaft area to aid in loosening the rotate pulley screw. Install the rotate tool with the pin on the upper ball socket located in the "U" (uppercase) slot in the rotate tool. Loosen the setscrew in the rotate pulley and then turn the tool in a clockwise direction until it touches the rotate detent and hold it in this position while tightening the setscrew.

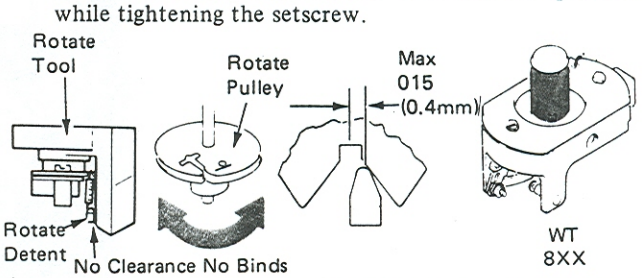

Adjustment	Shift	Character	Tool Slot	Adjust	WT Adjust
Preliminary Homing	UC	I Tilt 2 +3 Rotate	U	Rotate Pulley	UBS

NOTE: This is the only time the tool will be used on this side of the rotate detent.

Machines with adjustable balance arms should have the balance arm positioned so that the notches are as shown.

Continued On Next Page

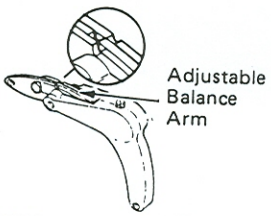

16. *Zero Rotate* – With the machine in UPPER CASE, half cycle a "1/4" (tilt 2, zero rotate). Install the tool with the pin on the upper ball socket in the U slot of the rotate tool. Adjust the turnbuckle so that no clearance exists between the blade of the rotate tool and the rotate detent. Detent must restore with **no binds.**

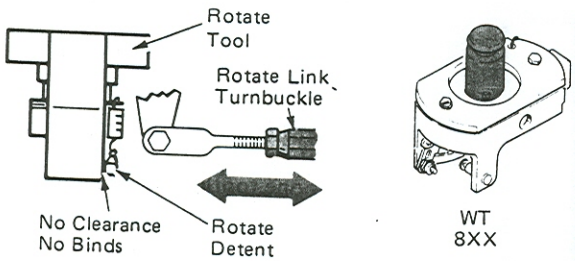

Adjustment	Shift	Character	Tool Slot	Adjust	W.T. Adjust
Zero Rotate	UC	"¼" Tilt 2 Zero Rotate	U	Turnbuckle	U.B.S. Or Turnbuckle

NOTE: Leave the turnbuckle loose at this time.

Remove tool.

17. *+5 Motion* – Half cycle an UPPER CASE "W" (+5 rotate, tilt 2) and install the rotate tool with the pin on the upper ball socket in the +5 slot of the rotate tool.

Adjust the link up or down on the rotate arm to remove all clearance between the blade of the rotate tool and the rotate detent without binding the detent.

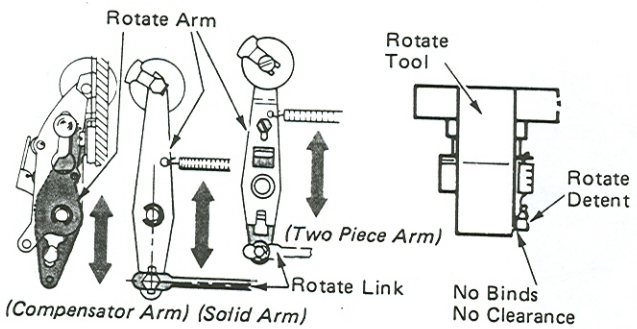

Adjustment	Shift	Character	Tool Slot	Adjust
+5 Motion	UC	"W" Tilt 2 +5 Rotate	+5	Rotate Arm

Remove tool.

18. *-5 Motion* – Half cycle an UPPER CASE "M" (tilt 2, -5 rotate) and install the rotate tool with the pin on the upper ball socket in the -5 slot of the tool. Readjust the turnbuckle to remove all clearance between the blade of the rotate tool and the rotate detent. The detent must restore with **no binds.** Tighten the turnbuckle nuts.

NOTE: Recheck this adjustment after tightening the turnbuckle nuts.

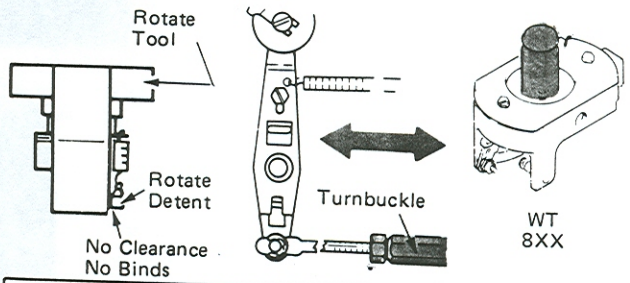

Adjustment	Shift	Character	Tool Slot	Adjust	W.T. Adjust
-5 Motion	UC	"M" Tilt 2 -5 Rotate	-5	Turnbuckle	U.B.S. Or Turnbuckle

After adjusting the rotate link and tightening the lock nuts, ensure that there are no binds at the rotate link pivot points. This may be checked by moving the link front-to-rear and observing some link motion on the pivot studs. This will ensure that the flat ends of the rotate link are parallel to the flat ends of the rotate arm and rotate bellcrank.

Remove tool.

19. *Balance* – Half cycle an UPPER CASE "1/4" (tilt 2, zero rotate) and install the rotate tool with the pin on the upper ball socket in the U slot of the rotate tool. Adjust the -5 stop screw for no clearance and no binds between the blade of the tool and rotate detent.

Adjusting the -5 stop screw up decreases the clearance between the blade of the tool and the detent.

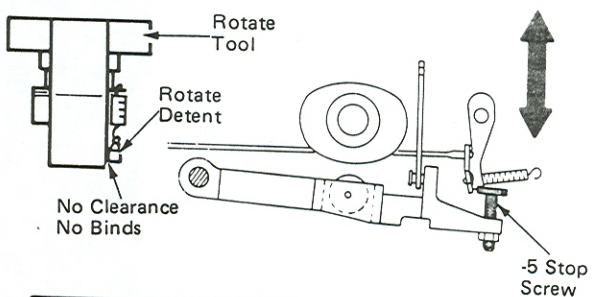

Adjustment	Shift	Character	Tool Slot	Adjust
Balance	UC	"¼" Tilt 2 Zero Rotate	U	-5 Stop Screw

Continued On Next Page

CAUTION: Be sure to check the overlap of the latch on the head of the stop screw. The head of the stop screw may be out-of-round and turning the screw may change the overlap.

NOTE: This adjustment is used for both the adjustable and solid balance arm. If the machine has an adjustable balance arm, the notches should be aligned as shown.

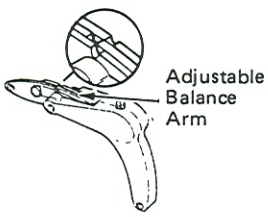

Remove tool.

20. *Shift Motion* – With the machine in LOWER CASE, half cycle a "1/2" (tilt 2, zero rotate). Install the rotate tool with the pin on the upper ball socket in the L slot in the rotate tool. Adjust the shift stop screw in or out for no clearance and no binds between the blade of the tool and rotate detent.

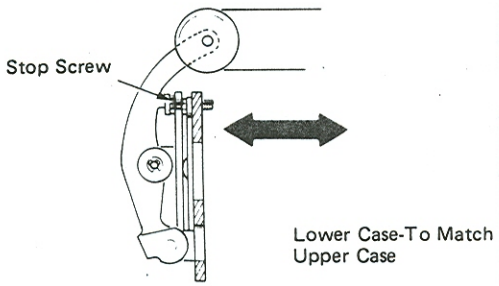

(Rear View)

Adjustment	Shift	Character	Tool Slot	Adjust
Shift Motion	LC	"½" Tilt 2 Zero Rotate	L	Shift Stop Screw

Remove tool.

21. *Final Timing* – Replace typehead. Loosen the print shaft gear and advance or retard the print shaft so that the detent lightly scrubs the tip of the typehead tooth as it withdraws. Be sure to maintain .005"-.010" (0.13-0.25 mm) end play in the print shaft.

A method to get the above condition is to use the following procedure:

Loosen print shaft gear and cycle an UPPER CASE letter "M" (tilt 2, -5 rotate) until check pawl latches at half-cycle position. Manually rotate the print shaft, observe rotate detent entering and beginning to be removed. Stop rotation where the rotate detent is removed halfway from slope of tooth skirt.

Continue hand cycling operation until the type element begins to rotate. Stop hand cycling at this point. Tighten the print shaft gear.

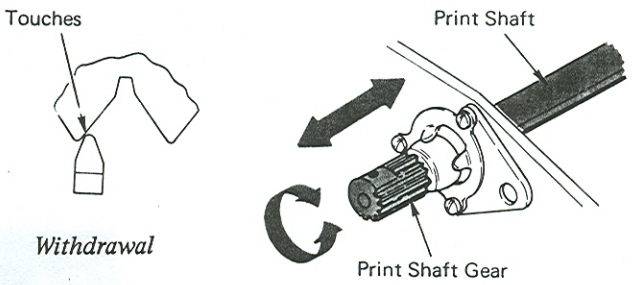

Withdrawal

CAUTION: Excessively advanced or late timing can cause parts damage as well as bad horizontal alignment or malselection. This could happen if the detent entered the wrong notch or remained in the notch too long.

NOTE: A burr on the print shaft may cause this procedure to fail. If previous fine timing adjustments have caused a burr on the print shaft, remove the print shaft gear and rotate it one tooth in either direction to get to a good surface of the print shaft.

22. *Rotate Pulley Guard* – Adjust the rotate pulley guard around at 45 degrees left of vertical to keep the guard from hitting the power frame. The guard must clear the rotate tape by .005" (0.13 mm) with the rotate arm in the negative 5 position.

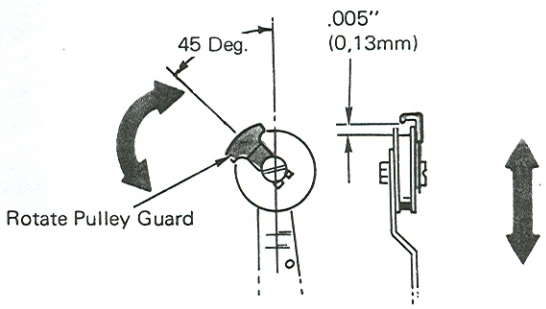

(Front View) (Side View)

ROTATE ADJUSTMENTS WITH TYPEHEAD

23. The compensator arm must be disabled. Use the procedure at the end of this section.

24. *Rotate Arm Vertical (Preliminary)* – Adjust the turnbuckle on the rotate link so that the center of the top of the rotate arm is in line with the No. 1 line of the Hooverometer when the Hooverometer is against the side frame.

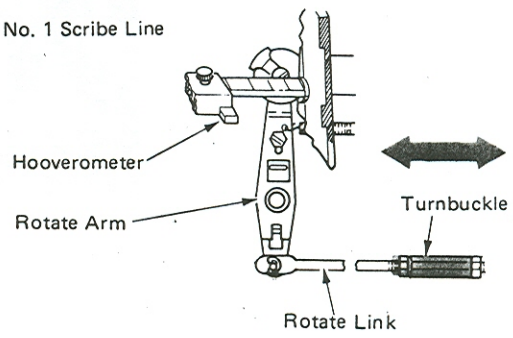

(Solid Arm – Front View)

Continued On Next Page

(Solid Arm – Front View)

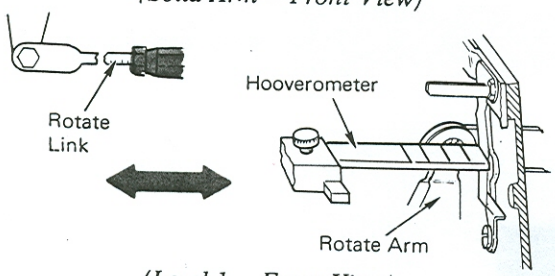

(Level 1 – Front View)

NOTE: Adjustments 25 through 28 must be made with the machine in uppercase. Install the typehead.

25. *Typehead Homing* – Loosen the rotate pulley setscrew and slip the typehead around until the detent enters the correct tooth when a "T" (tilt 1, zero rotate) is half cycled. Set the detent in this tooth to about 1/3 down the negative side of the typehead tooth, with the head play removed in the negative direction. Tighten the setscrew. It is not necessary to slip the typehead if the detent enters the correct tooth.

On W. T. machines, adjust the UBS to get the above condition.

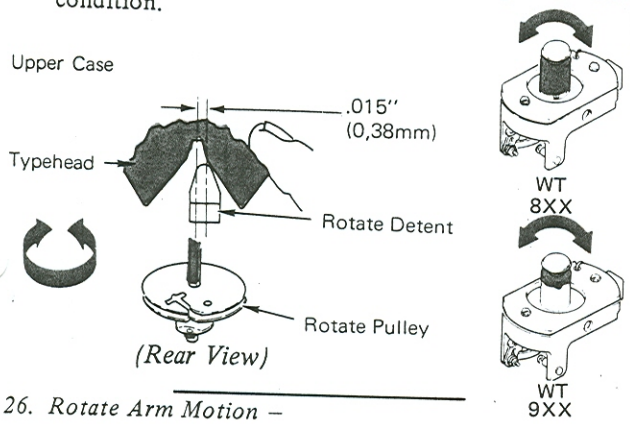

(Rear View)

26. *Rotate Arm Motion* –

a. *One Piece* – Adjust the stud at the bottom of the rotate arm to provide the proper motion in each direction of typehead rotation. The correct position of the stud is determined by observing the detent entry of the "T" (tilt 1, zero rotate) and "W" (tilt 2, +5 rotate) while changing the stud's position. When the detent entry is equal, the stud is correctly positioned.

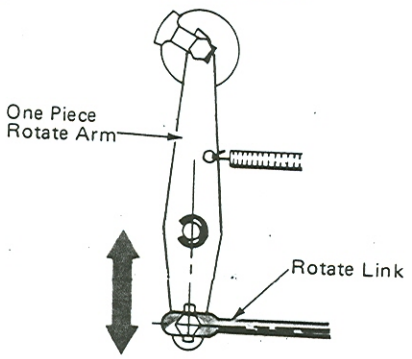

b. *Two Piece And Compensator Arm* – Adjust the lower part of the rotate arm to provide the proper motion in each direction of typehead rotation. The correct position is determined by observing the detenting of the "T" (tilt 1, zero rotate) and "W" (tilt 2, +5 rotate). When the detent entry is equal, the lower part of the arm is positioned correctly.

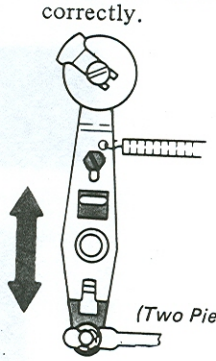

(Two Piece Arm)

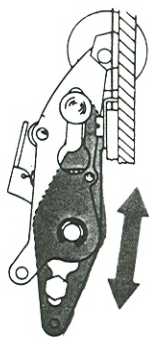

(Compensator Arm)

NOTE: If the rotate link or the lower part of the rotate arm is adjusted to the upper limit and there is not enough motion, make sure the selection latch stop pads are adjusted correctly.

NOTE: W.T. 9XX machines should be adjusted to make the negative 6 rotate match the positive 5 rotate.

27. *Balance* – The -5 stop screw is adjusted for proper proportion between positive and negative selections. Make this adjustment by first cycling an uppercase "M" (tilt 2, -5 rotate) and observing detent entry. Next, half cycle a "T" (tilt 1, zero rotate) and adjust the -5 stop screw in or out until the detenting of the "T" (tilt 1, zero rotate) matches the detenting of the uppercase "M" (tilt 2, -5 rotate) previously observed.

Be sure to check the overlap of the latch on the head of the stop screw. The head of the stop screw may be out-of-round and turning the screw may change the overlap.

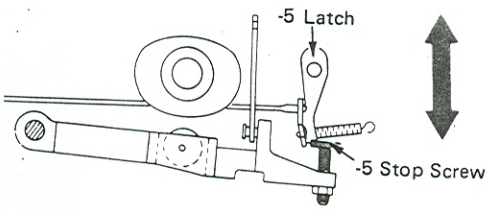

NOTE: If the machine has an adjustable balance arm, the notches should be aligned as shown below.

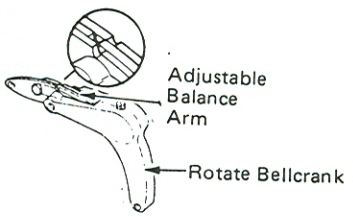

28. *Rotate Link* – Adjust the rotate link so the rotate detent contacts the negative side of the typehead .010"-.020" (0.25-0.51 mm) from the center of the notch when the home character is half cycled.

W.T. – Adjust the UBS to get the above condition.

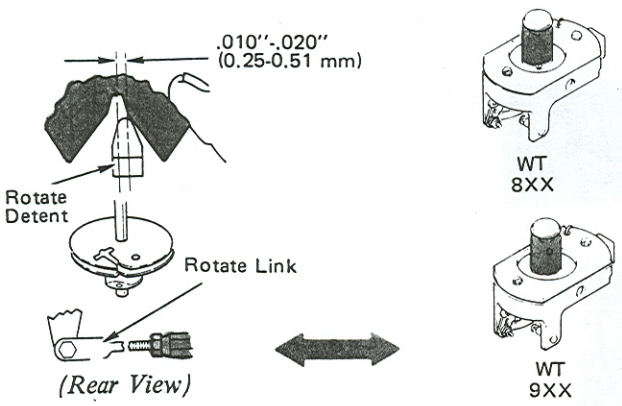

(Rear View)

After adjusting the rotate link and tightening the lock nuts, ensure that there are no binds at the rotate link pivot points. This may be checked by moving the link front-to-rear and observing some link motion on the pivot studs. This will ensure that the flat ends of the rotate link are parallel to the flat ends of the rotate arm and rotate bellcrank.

NOTE: This adjustment should be checked on every call.

29. *Shift Motion* – Shift the machine into lowercase so that the shift arm contacts the stop screw. Adjust the stop screw so that a lowercase "t" (tilt 1, zero rotate) detents EXACTLY the same as an uppercase "T" (tilt 1, zero rotate).

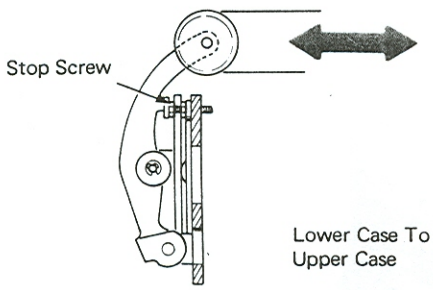

(Rear View)

30. *Final Timing* – Replace typehead. Loosen the print shaft gear and advance or retard the print shaft so that the detent lightly scrubs the tip of the typehead tooth as it withdraws. Be sure to maintain .005"-.010" (0.13-0.25 mm) end play in the print shaft.

A method to get the above condition is to use the following procedure:

Loosen print shaft gear and cycle an UPPER CASE letter "M" (tilt 2, -5 rotate) until check pawl latches at half-cycle position. Manually rotate the print shaft, observe rotate detent entering and beginning to be removed. Stop rotation where the rotate detent is removed halfway from slope of tooth skirt.

Continue hand cycling operation until the type element begins to rotate. Stop hand cycling at this point. Tighten the print shaft gear.

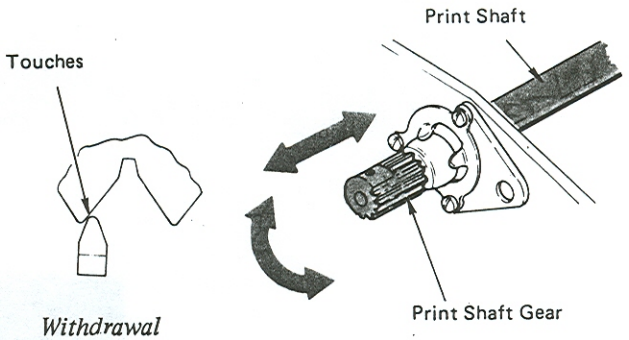

Withdrawal

CAUTION: Excessively advanced or late timing can cause parts damage as well as bad horizontal alignment or malselection. This could happen if the detent entered the wrong notch or remained in the notch too long.

NOTE: A burred print shaft may cause this procedure to fail. If previous fine timing adjustments have caused a burr on the print shaft, remove the print shaft gear and rotate it one tooth in either direction to get to a good surface of the print shaft.

31. *Rotate Pulley Guard* – Adjust the rotate pulley guard around at 45 degrees left of vertical. This will keep the guard from hitting the power frame. The guard must clear the rotate tape by .005" (0.13 mm) with the rotate arm in the negative 5 position.

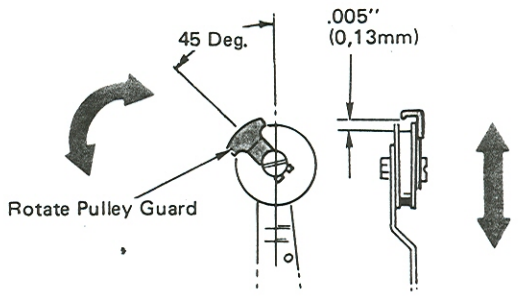

(Front View) *(Side View)*

This completes the coarse alignment adjustments. The following chart may be used to determine the rotate and tilt locations of characters on typehead:

STANDARD U.S. TYPE ELEMENTS

-5	-4	-3	-2	-1	Home	+1	+2	+3	+4	+5	
[	#	&	*	$	Z	@	%	ç	)	(	T-0
X	U	D	C	L	T	N	E	K	H	B	T-1
M	V	R	A	O	°	.	"	I	S	W	T-2
G	F	:	,	?	J	+	P	Q	Y	_	T-3

Upper Case

-5	-4	-3	-2	-1	Home	+1	+2	+3	+4	+5	
]	3	7	8	4	z	2	5	6	0	9	T-0
x	u	d	c	l	t	n	e	k	h	b	T-1
m	v	r	a	o	l	.	'	j	s	w	T-2
g	f	;	,	/	j	=	p	q	y	-	T-3
-5	-5, 1	-5, 2	-5, 1, 2	-5, 2, 2A	Home	1	2	1, 2	2, 2A	1, 2, 2A	

Lower Case

NOTE: W.T. – use chart below.

	T-3	T-2	T-1	T-0		
R–5					-6	Upper Case
R–5–1					-5	
R–5–2					-4	
R–5–1–2					-3	
R–5–2–2A					-2	
R–5–1–2–2A					-1	
R–0 (homing)					0	
R–1					1	
R–2					2	
R–1–2					3	
R–2–2A					4	
R–1–2–2A					5	
R–5					-6	Lower Case
R–5–1					-5	
R–5–2					-4	
R–5–1–2					-3	
R–5–2–2A					-2	
R–5–1–2–2A					-1	
R–0 (homing)					0	
R–1					1	
R–2					2	
R–1–2					3	
R–2–2A					4	
R–1–2–2A					5	

SELECTION ADJUSTMENT WITH ADJUSTABLE UPPER BALL SOCKET – W.T.

32. *Typehead Homing* – The rotate homing is adjusted for .015" (0.4 mm) clearance between center line of type element notch and center line of rotate detent with headplay removed clockwise.

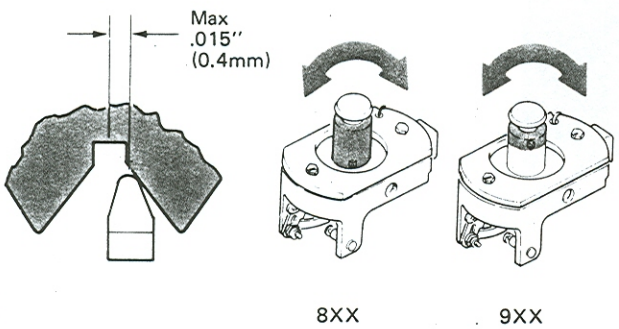

a. To Adjust – Half cycle a tilt 2, +5 rotate character. Open the type element lever and loosen the upper ball socket screw. Move the detent actuating lever to remove the rotate detent from the notch. Push the type element down and rotate counterclockwise until rotate detent is even or past the center line of the first tooth.

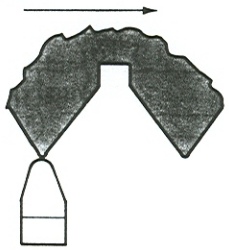

b. Rotate type element clockwise while allowing rotate detent to slide up the side of the notch.

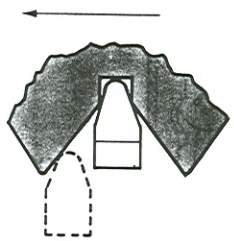

c. Continue rotating type element clockwise until center line of rotate detent is .015" (0.4 mm) from center line of notch.

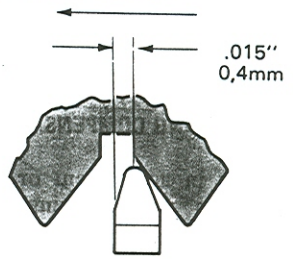

d. Release detent actuating lever and allow type element to rotate counterclockwise until rotate detent bottoms in notch.

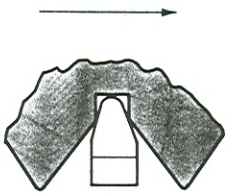

Hold type element down and prevent from rotating while upper ball socket screw is tightened. Check rotate detenting on tilt 2 rotate 0, -1, +5, -6.

NOTE: The lower ball socket and rotate pulley key have flats now. It is not possible to adjust rotate homing with the rotate pulley.

33. *Balance Arm* – Adjust for same element detent entry on tilt 2 rotate 0 as tilt 2 rotate -1.

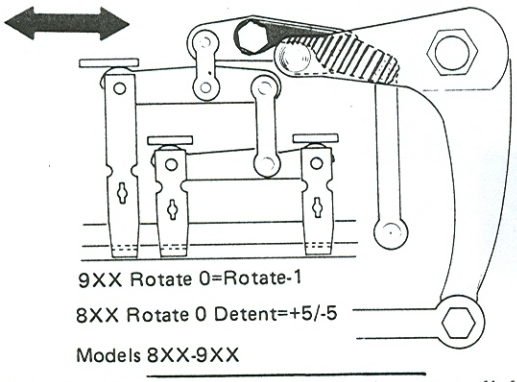

34. *Rotate Arm Motion* – Adjust the rotate link up or down for same type element detent entry on rotate +5 as rotate -6.

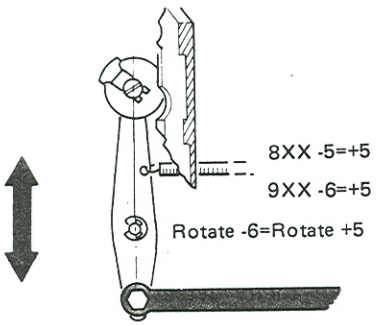

NOTE: Other adjustments remain the same as on the Model 82; for adjusting the rotate mechanism on Model 96, read -6 instead of -5.

PROCEDURE FOR DISABLING COMPENSATOR-TYPE ROTATE ARMS

If there are problems in adjustment or operation of the compensator rotate arm, the following procedure can be used to change to a one-piece arm:

1. Carefully break off the lug on the bottom of the eccentric rotate arm assembly.

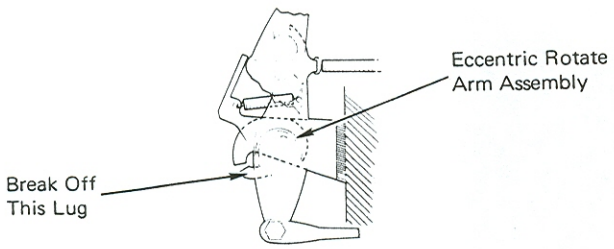

Front View

2. Place the wear compensator roller at the top of the slot.

3. Disconnect the spring from the rotate arm and connect it to the center of the compensator arm assembly.

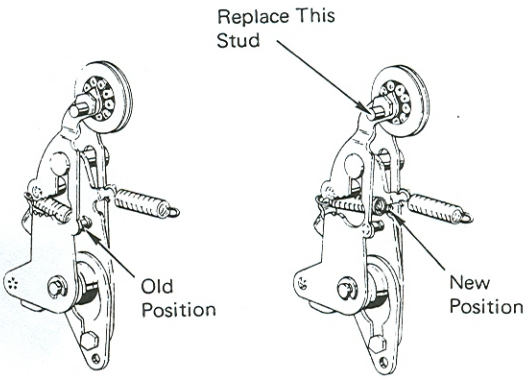

4. Replace the eccentric stud with the pulley stud for the one-piece arm, and adjust the system the same as you would adjust a one-piece rotate arm mechanism.

SWITCH PITCH OPERATIONAL THEORY

The purpose of the switch pitch mechanism is to perform the necessary switching operations within the escapement and margin mechanisms to allow the dual pitch "Selectric" II Typewriter to function properly in either 10 or 12 pitch. Both the escapement rack and margin rack are rods with teeth cut into two sides. Ten pitch teeth and 12 pitch teeth are cut into both sides of the racks. The racks are held in slots in the escapement and margin rails. This puts the escapement rack teeth and the margin rack teeth in approximately the same position in the machine as the non-rotary backspace (NRB/S) escapement and margin rack teeth. Both the margin and escapement mechanisms function in the same way as the NRB/S "Selectric" Typewriter. Therefore, in order to switch pitch, it is necessary to rotate the racks until either the 10 pitch teeth or 12 pitch teeth face the rear of the machine and engage the escapement pawl and margin slider (Figure 1).

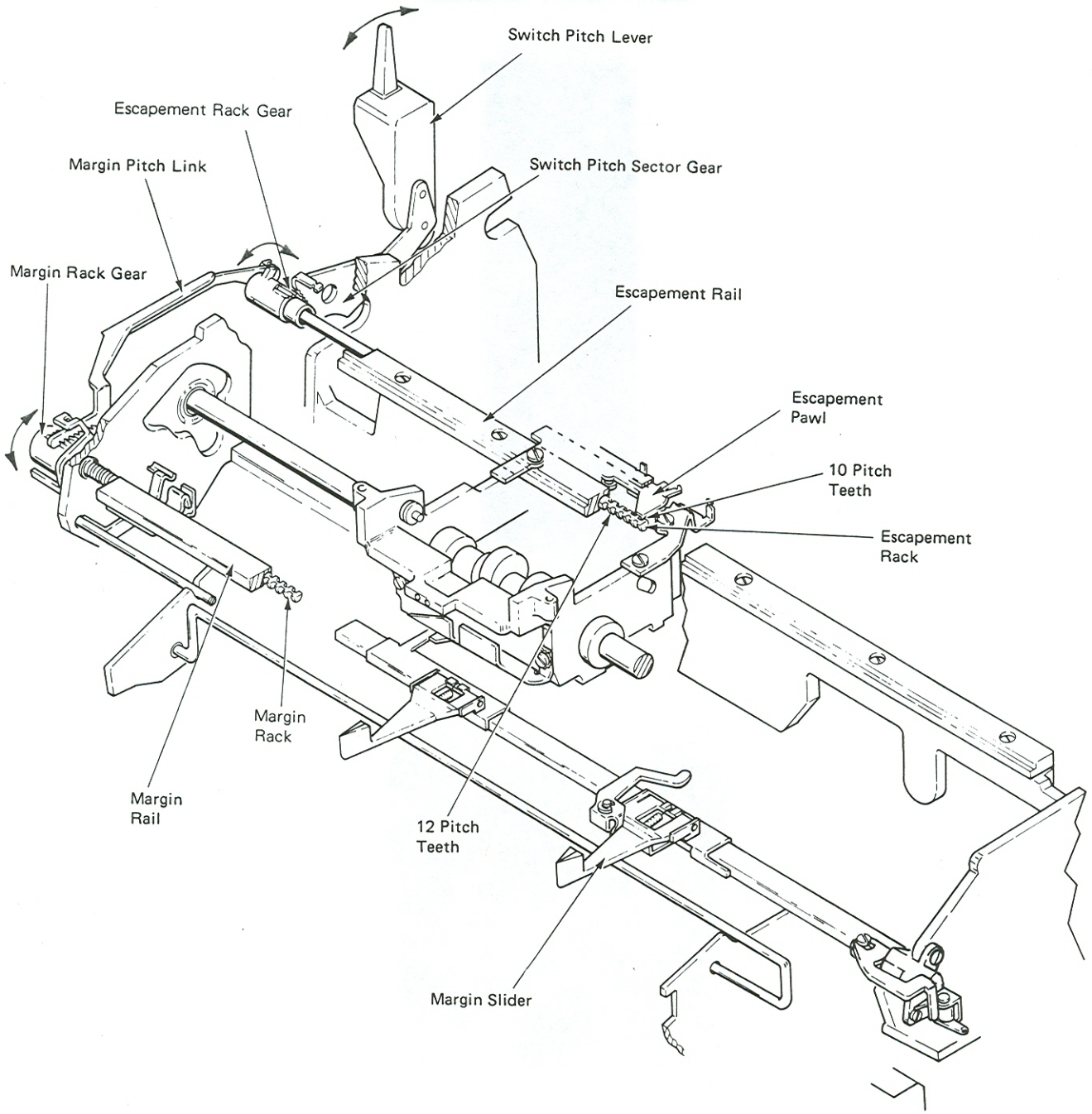

Figure 1 – Switch Pitch

ESCAPEMENT RACK ROTATION

The escapement rail is attached to the power frame in the same way as the NRB/S "Selectric" Typewriter escapement rack. The horizontal rest position of the escapement rack is controlled by spring tension, loading the rack to the right end of the rail. The left end of the escapement rack extends through the escapement rack bearing plate which is mounted to the left side of the power frame (Figure 2).

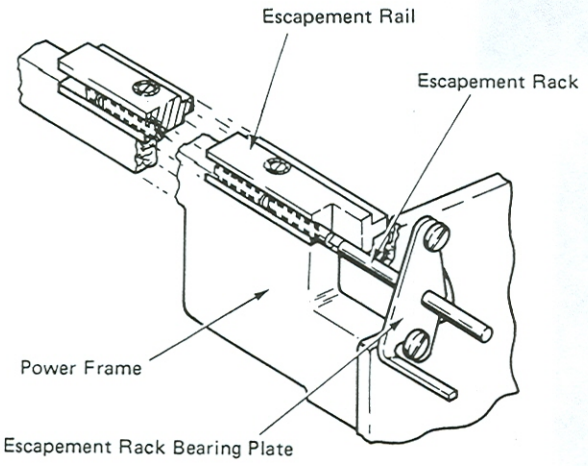

Figure 2 – Escapement Rack Mounting (Left Rear View)

The rotation of the escapement rack is done by the switch pitch lever, switch pitch sector gear and escapement rack gear. The switch pitch lever is mounted to the switch pitch sector gear and the assembly pivots on an extension of the multiple copy control shaft. The teeth of the sector gear engage the teeth of the escapement rack gear, which is attached to the left end of the escapement rack. As the switch pitch lever is operated, the sector gear moves up or down rotating the escapement rack gear (Figure 3).

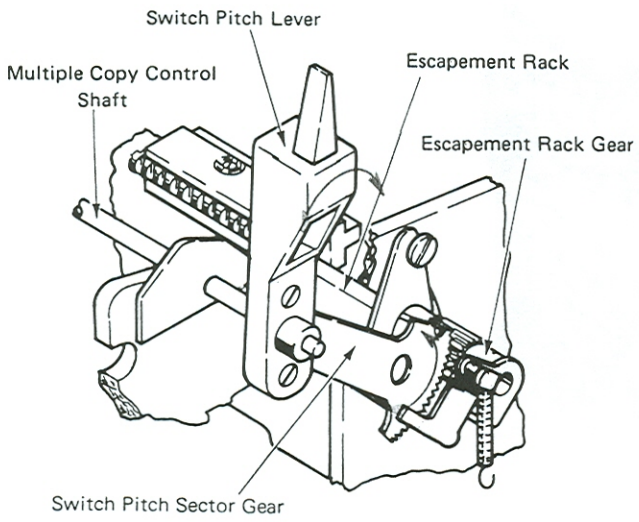

Figure 3 – Escapement Rack Gear And Switch Pitch Sector Gear (Left Rear View)

The escapement rack gear stop lug controls the two rest positions of the escapement rack. In the 10 pitch mode, the stop lug is spring loaded against the half backspace lever mounting stud by the escapement rack gear toggle spring. When the gear is switched to the 12 pitch mode, it moves over and the stop lug is spring loaded against a lug on the escapement rack bearing plate (Figure 4).

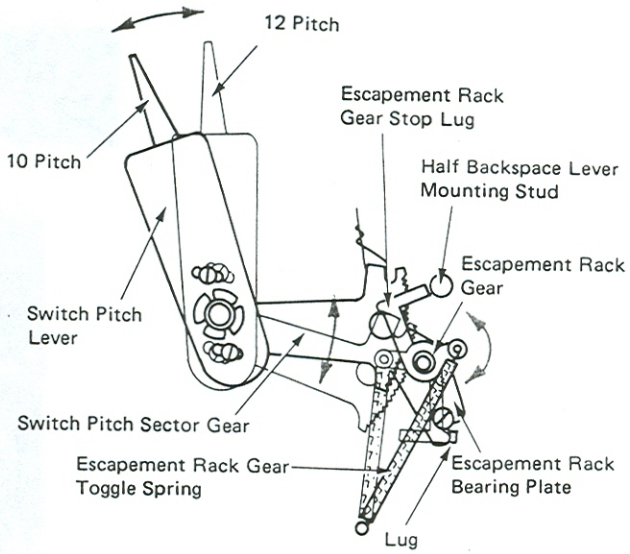

Figure 4 – Escapement Rack Rotation (Left Side View)

MARGIN RACK ROTATION

The left end of the margin rack is mounted in a bushing that is held in a hole in the power frame. The right end of the margin rack is mounted in the overbank guide bracket. The margin rack supports the margin rail. The margin release bracket is mounted to the margin rail. A lug on the margin release bracket engages a notch in the margin rack causing the rack and the rail to move left-to-right as a unit. The left-to-right position of the margin rack/rail and overbank motion are controlled by the overbank guide (Figure 5).

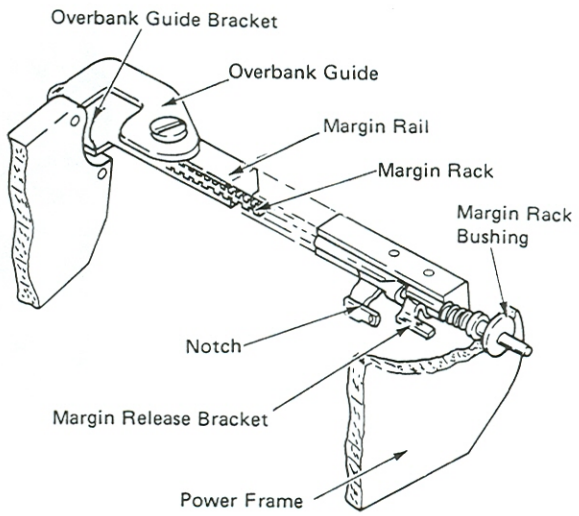

Figure 5 – Margin Rack Mounting (Left Rear View)

The margin rack is rotated by the margin pitch link and the margin rack gear. The teeth of the margin pitch link engage the teeth of the margin rack gear which is attached to the left end of the margin rack. The rear end of the margin pitch link is mounted to the escapement rack gear. As the escapement rack gear is rotated, the margin pitch link moves front-to-rear rotating the margin rack gear (Figure 6).

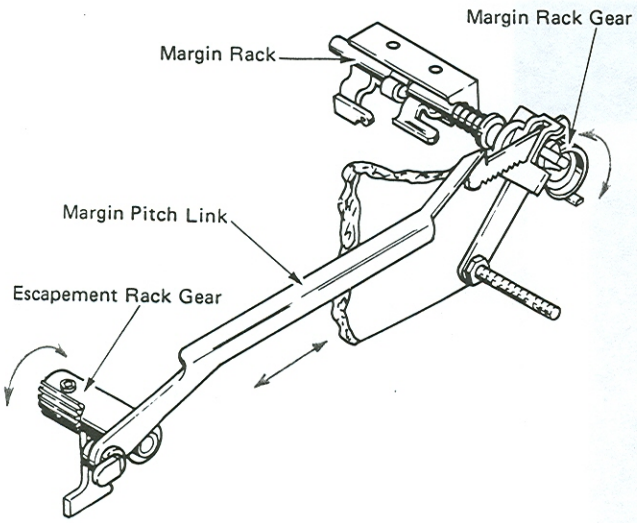

Figure 6 – Margin Pitch Link And Margin Rack Gear (Left Rear View)

The two rest positions of the margin rack gear are controlled by two stops on the margin pitch link guide bracket. A lug on the margin rack gear is moved and spring loaded against the stops in the same way as the escapement rack gear (Figure 7).

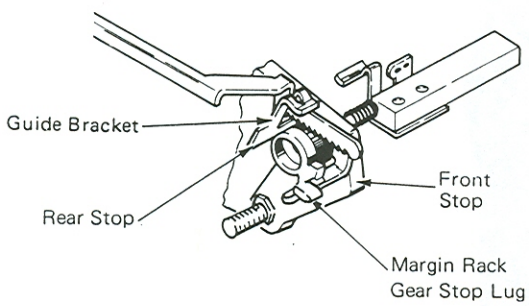

Figure 7 – Margin Rack Rotation (Left Front View)

SWITCH PITCH ADJUSTMENTS

1. *Switch Pitch Lever* – Adjust the retainer for .001"-.005" (0.03-0.13 mm) end play of the switch pitch lever.

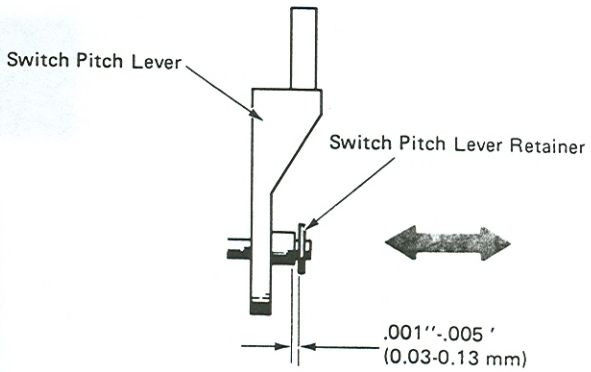

(Rear View)

2. *Escapement Rack Gear* – With the escapement rack gear stop lug against the half backspace lever mounting stud, adjust the 10 pitch escapement rack teeth vertical.

   Level 1 – A clearance of .005"-.010" (0.13-0.25 mm) must be maintained between the escapement rack gear and the escapement rack bearing plate when tightening the setscrews.

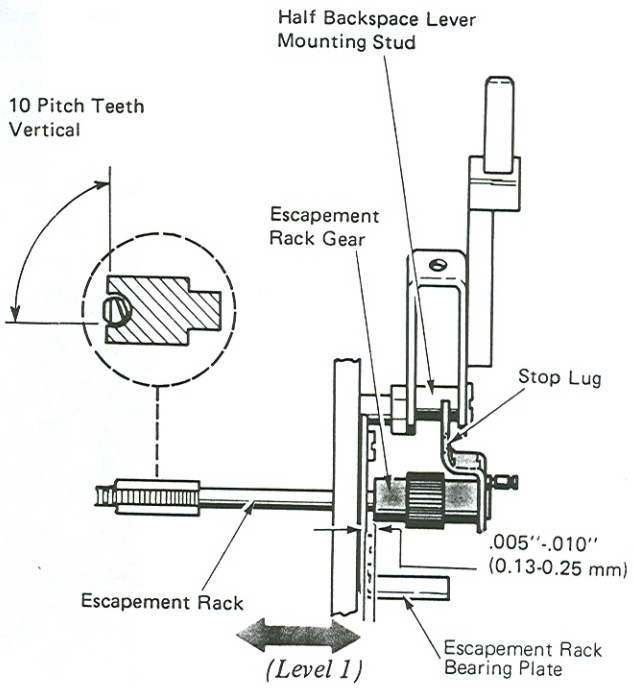

(Rear View)

Levels 2 And 3 – The gear should be positioned left to right to be flush against (no clearance) the half backspace cam.

Continued On Next Page

This can be done as follows: Loosen the escapement rack gear. Insert the blade of a small three-inch screwdriver in the first tooth on the left end of the rack. Raise the screwdriver until it touches the tab rack shaft and lightly hit the screwdriver until it is fully bottomed in the tooth and the rack stops rotating; then, tighten the rack gear. This procedure will ensure the rack teeth are vertical.

NOTE: The tip of the screwdriver blade must be square.

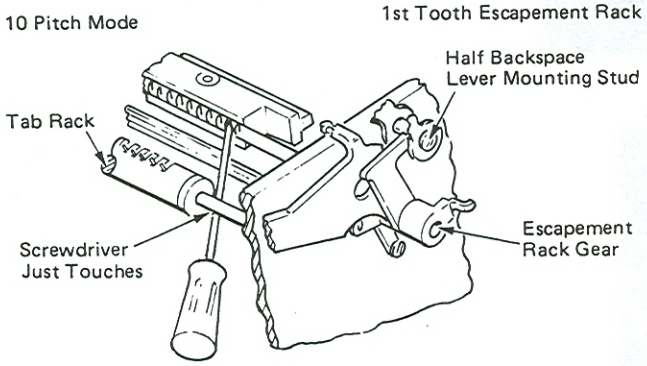

(Rear View)

3. *Escapement Rack Gear Lower Stop* – With the machine in 12 pitch, form the lower stop toward the front of the machine and insert the small three-inch screwdriver in the first tooth of the escapement rack and lightly hit the screwdriver until it is fully bottomed and the rack stops rotating. Form the lower stop until it touches the escapement rack gear stop lug.

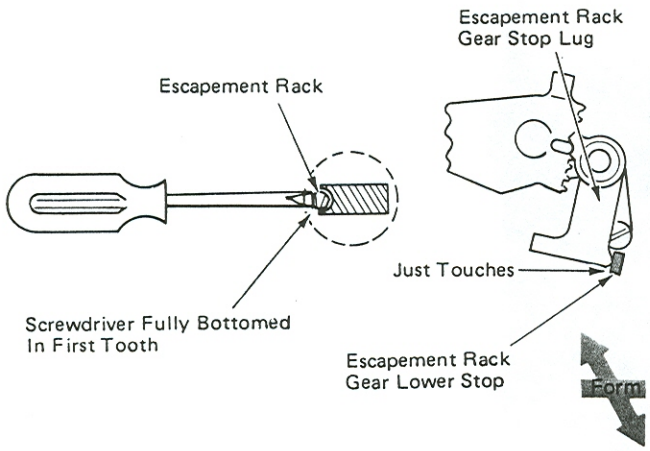

(Left Side View)

4. *Switch Pitch Sector Gear, Level 1* – With the escapement rack gear stop lug against the lower stop, engage the switch pitch sector gear with the escapement rack gear so the upper two teeth do not engage. Adjust for minimum backlash with no binds. The switch pitch lever should be positioned to be parallel to the multiple copy control lever in the "B" position.

Level 2 – With the escapement rack gear stop lug against the lower stop, engage the top tooth of the sector gear with the escapement rack gear.

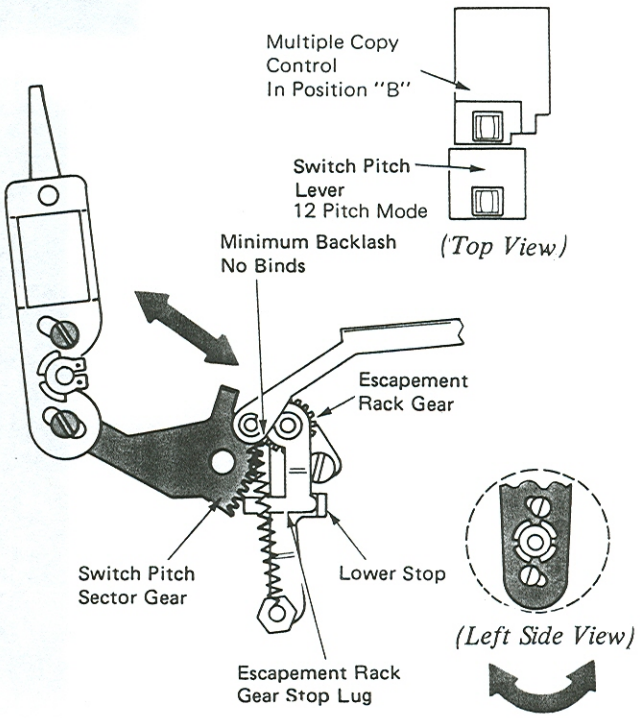

5. *Margin Rail Horizontal* – Form the margin release bracket so the margin rail rests in a horizontal position.

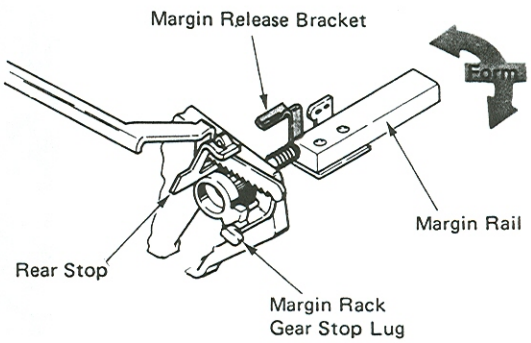

6. *Overbank* – With carrier at the left margin, position the overbank guide left or right for .001"-.005" (0.03-0.13 mm) between the carrier stop latch and the left margin stop in the 12 pitch mode. In the 10 pitch mode, the clearance must not be more than .015" (0.38 mm). Make sure the margin rack gear does not interfere with this adjustment.

NOTE: While making this adjustment, it is necessary to remove all motion of the rack within the rail to the left. This can be done by holding the rail and moving the rack to the left with the right margin slider.

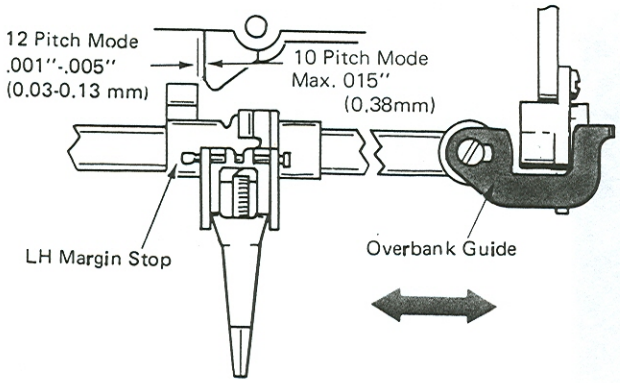

(Top View)

7. *Clutch Unlatching Link* – Adjust the carrier return clutch unlatching link for .001"-.010" (0.03-0.25 mm) between the latch with the carrier in the full overbank position.

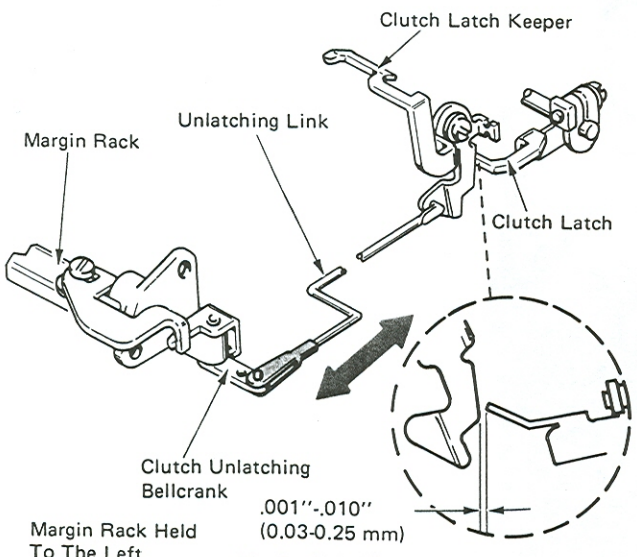

(Right Side View)

8. *Margin Pitch Link Guide Bracket* – Adjust the margin pitch link guide bracket up or down for .005"-.010" (0.13-0.25 mm) clearance between the guide bracket lug and the top edge of the margin pitch link. Make this adjustment with the machine in the 12 pitch mode; engage the first tooth of the margin pitch link with the first tooth of the margin rack gear. This adjustment allows the margin pitch link to give minimum backlash and not bind with the margin rack gear.

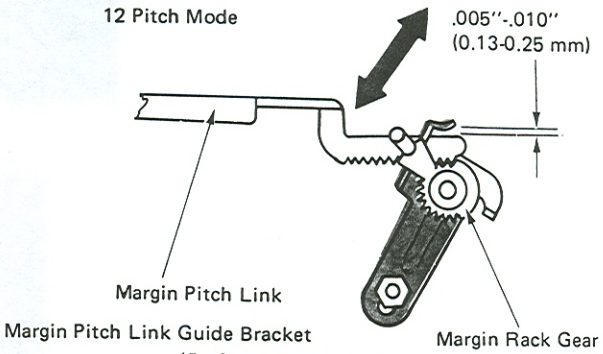

(Left Side View)

9. *Margin Rack Gear* – With the margin rack gear against the rear stop, rotate the margin rack until the 12 pitch teeth are vertical. Maintain .001"-.005" (0.03-0.13 mm) clearance between the margin rack gear and the bushing when tightening the setscrews.

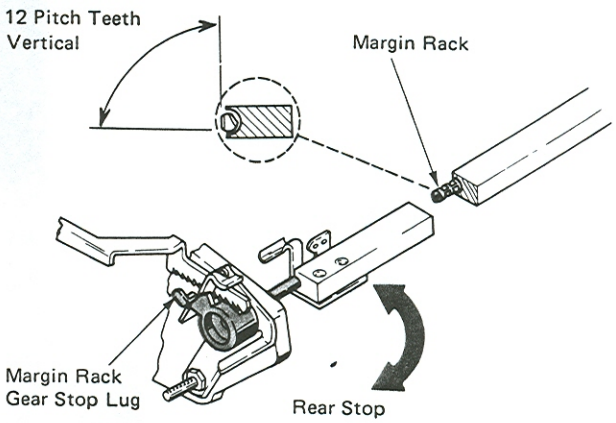

NOTE: When adjusting the margin switch pitch gear end play, it is necessary to remove all of the motion of the rack within the rail to the left. This can be done by holding the rail and moving the rack to the left with the right margin slider.

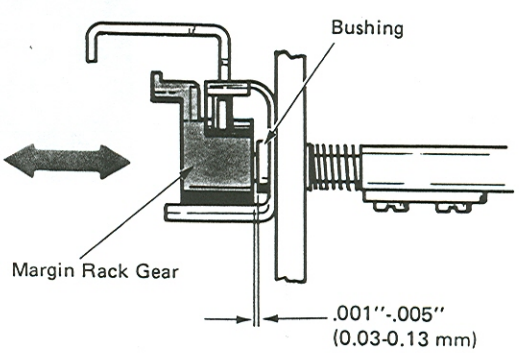

(Front View)

10. *Front Margin Rack Gear Stop* – Form the front margin rack stop lug so the ten pitch margin rack teeth are vertical in the ten pitch mode.

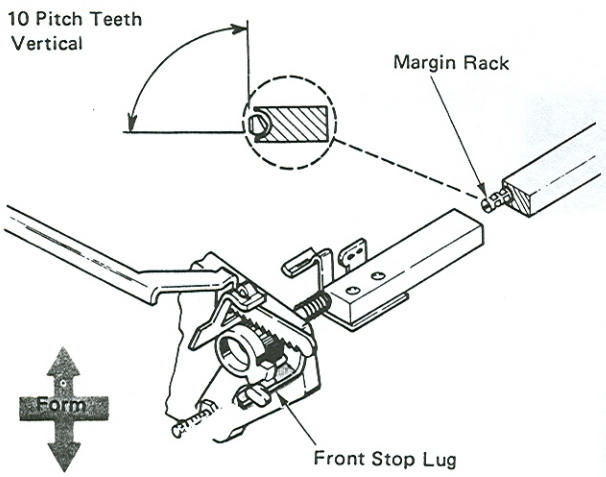

ESCAPEMENT (NRB/S) OPERATIONAL THEORY

The purpose of the escapement mechanism is to control the single space movement of the carrier during each print cycle (Figure 1). The non-rotary backspace (NRB/S) escapement mechanism uses a backspace rack to provide the motion for carrier backspace.

The carrier is under constant mainspring tension. At rest, the escapement pawl, which is mounted on the carrier, engages the escapement rack and prevents the mainspring from pulling the carrier to the right. During an escapement operation, the pawl is pulled out of the rack and the carrier moves to the right under mainspring tension until the pawl engages the next tooth on the escapement rack.

Power to operate the escapement mechanisms is taken from the escapement cam, mounted on the filter shaft just inside the right-hand power frame (Figure 1). Each time a cycle occurs, the filter shaft rotates the cam 180 degrees.

The escapement cam follower pivots on a shaft just to the rear of the escapement cam. A trip link extends to the rear, from the cam follower to the trigger lever.

Each time the filter shaft turns, the escapement cam follower will pivot, pulling on the trip link, causing the trigger lever to rotate about the mounting shafts.

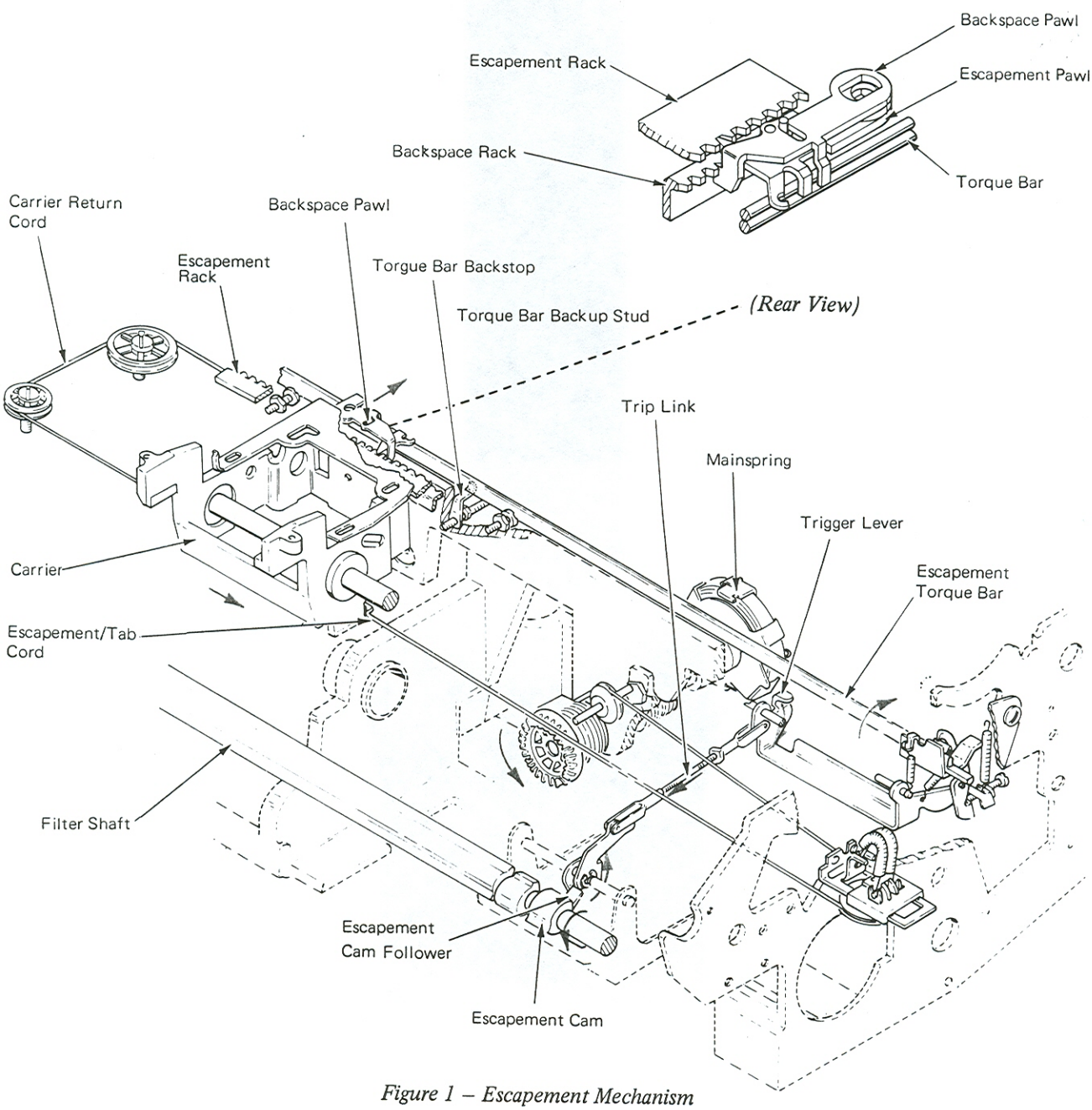

Figure 1 – Escapement Mechanism

TRIGGER OPERATION

An escapement trigger is mounted on the trigger lever (Figure 2). The trigger has hooked-shaped lugs that rest above a lug on the right end of the torque bar. During each escapement operation, the rotation of the trigger lever causes the trigger to move downward. This downward movement of the trigger causes the torque bar to rotate.

The torque bar pivots between the sides of the power frame, just to the rear of the escapement rack.

The pivot point of the torque bar is near its bottom edge. The escapement pawl and the backspace pawl each have a lug that extends down just behind the torque bar. As the top of the torque bar pivots to the rear, the torque bar will force the pawls to the rear, causing the tips of the pawls to clear their racks.

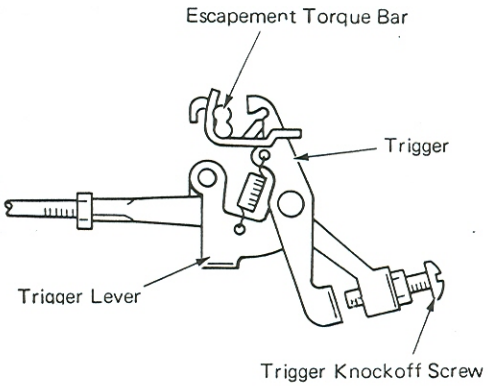

(Right Side View)

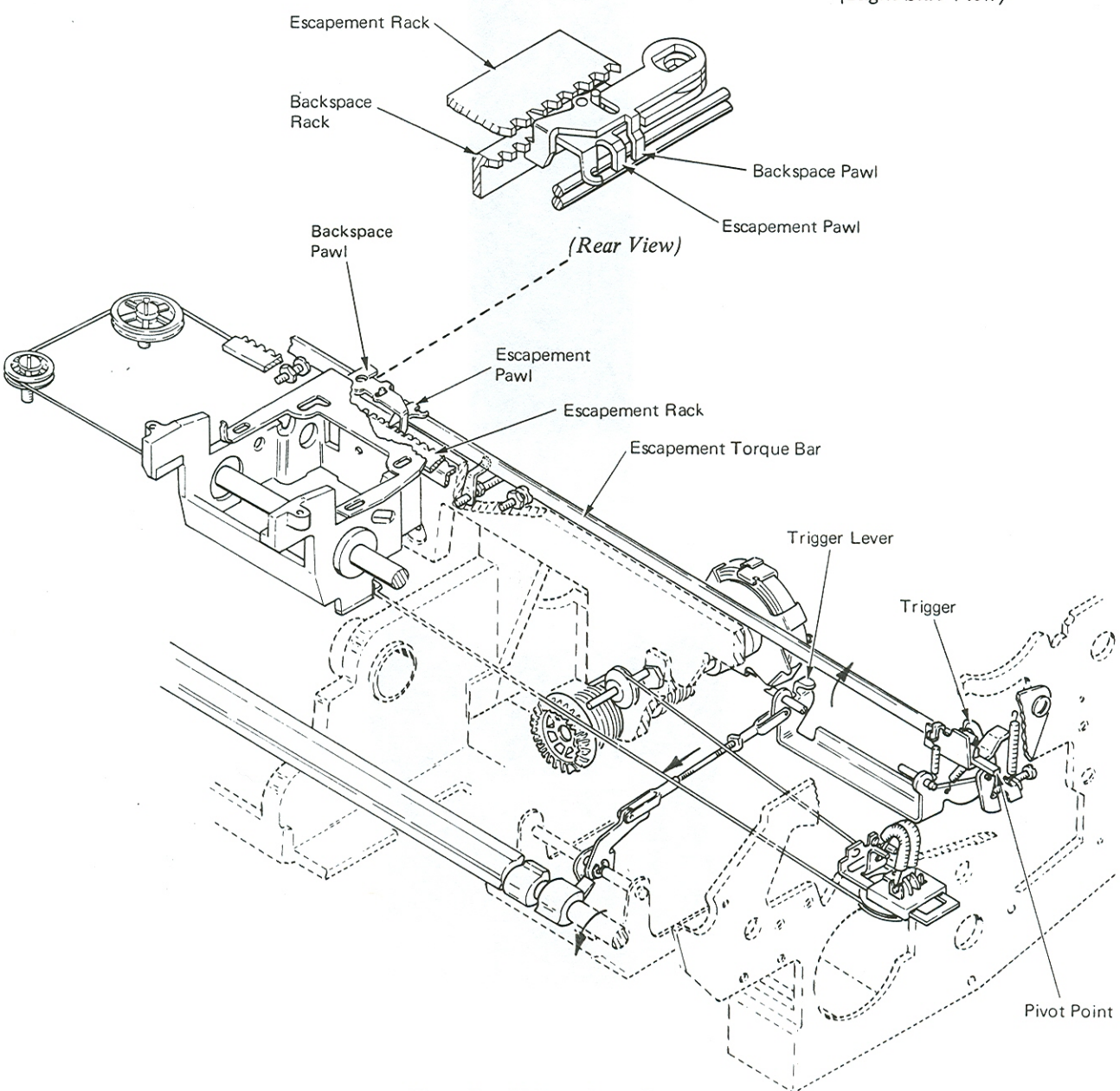

Figure 2 – Trigger Operation

OPERATING SEQUENCE

An escapement operation occurs by forcing the escapement pawl to the rear, out of engagement with the rack tooth. Due to the slot in the mounting hole, as soon as the pawl clears the escapement rack tooth, it is pulled quickly to the right by the pawl spring. The escapement pawl is allowed to move to the front into engagement with the next tooth. The carrier then moves to the right until it comes to rest against the escapement pawl.

Figure 3 shows the escapement and backspace pawls and their racks. The pivot stud is attached to the bracket mounted on the carrier.

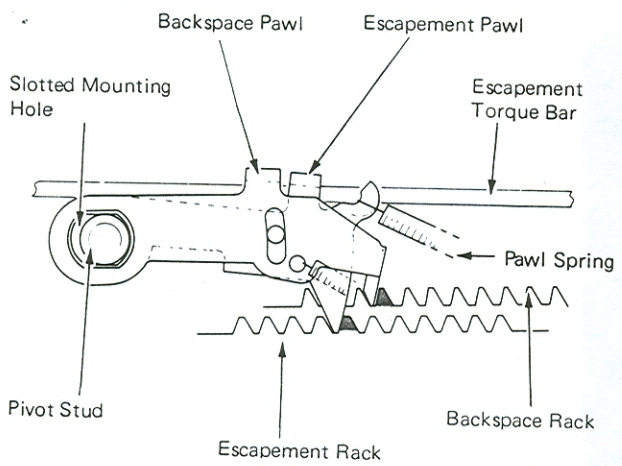

Figure 3 – Pawl At Rest (Top View)

The carrier is always being pulled to the right, and the pivot stud is against the right edge of the elongated slot in the pawls.

Figure 4 shows the torque bar operated. The pawls have been pulled free of their racks and the spring tension has pulled the pawls to the right before the carrier has started to move.

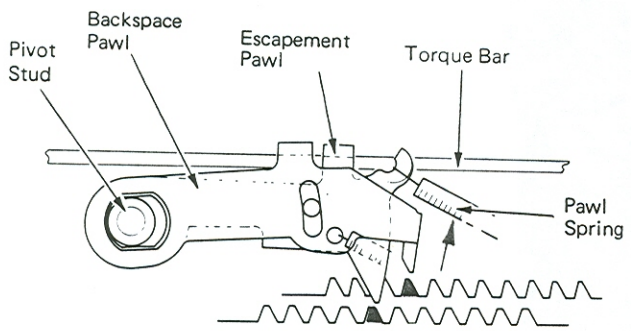

Figure 4 – Torque Bar Operated (Top View)

In Figure 5, the torque bar is returning to the rest position and the pawls are dropping into the next tooth of their racks. The carrier has not moved.

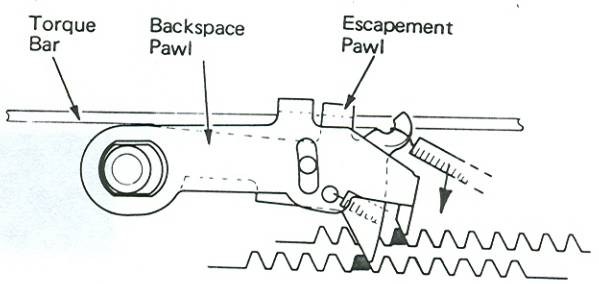

Figure 5 – Pawls Returning To Rest (Top View)

In Figure 6, the carrier has moved to the right and the pawls have stopped the pivot stud, and again the carrier is at rest after moving one space.

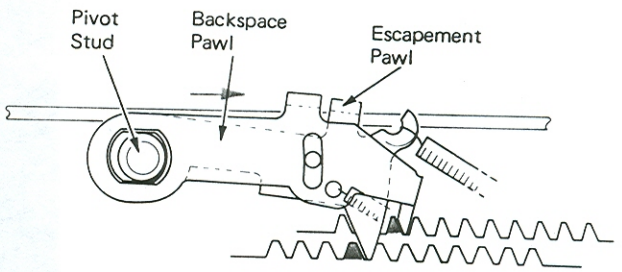

Figure 6 – End Of Operation (Top View)

NOTE: The carrier and escapement pawl must be moved to the left for a backspace operation. Because the backspace pawl is mounted to the escapement bracket, movement of the backspace pawl to the left forces the carrier and escapement pawl to the left. The backspace pawl is mounted just above the escapement pawl, but the backspace tooth extends below the escapement pawl and is held engaged with the backspace rack by a small extension spring.

The backspace rack is mounted to the rear of the power frame by shouldered screws through elongated holes in the rack. This mounting arrangement allows lateral movement of the rack. Movement of the rack to the left forces the backspace pawl to the left to cause a backspace operation.

The backspace operation is pointed out here due to the close connection with the escapement mechanism. The backspace pawl is engaged with the rack when in the rest position. This means that both the backspace and escapement pawls must be removed from their racks in order for the carrier to move to the right.

ESCAPEMENT TORQUE BAR

Because of the force required to pull the pawls out of their racks, the torque bar bends to the front instead of pushing the pawls to the rear. This is stopped by the use of a back-up stud mounted to the center power frame (Figure 7).

On level 1 machines, the pawl pivot stud extending down from the escapement bracket in front of the escapement torque bar stops this bending.

On XX3 and XX5 machines, an additional support is given to the escapement torque bar to prevent it from bending to the rear. A backstop mounted to a stud in the machine power frame provides the support.

NOTE: On long carriage machines, an additional backup stud can be mounted on the left side of the power frame to give the escapement torque bar additional support.

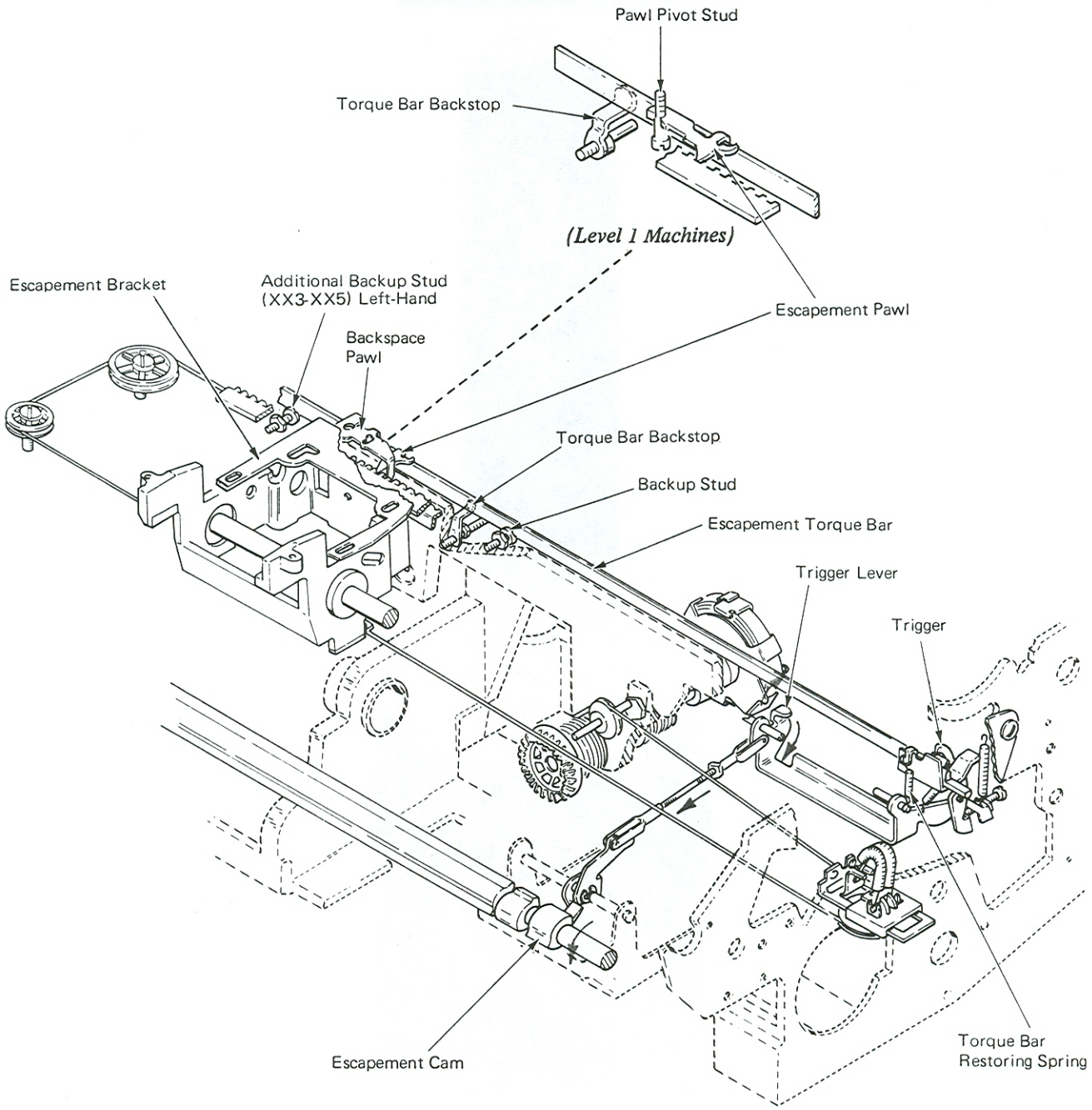

Figure 7 – Escapement Torque Bar

TRIGGER KNOCKOFF

Rotation of the escapement torque bar supplies just enough motion to remove the pawls from their racks. The torque bar is immediately rotated back to the rest position by a restoring spring located at the right-hand end. This allows the pawls to re-enter their racks to limit the carrier movement to one space (Figure 8).

Timing is important in this type of escapement. The torque bar must return to rest before the carrier has moved enough to skip a tooth on the racks.

The trigger lever is operated by motion transmitted from the escapement cam. Therefore, it can only restore as quickly as the cam can rotate from the high point to the low point. To prevent the escapement pawl from skipping, the torque bar must be allowed to restore more quickly.

An adjustable knockoff screw causes the trigger to cam off of the torque bar lug just after the pawls have been removed from the rack. The torque bar can then restore without waiting for restoring of the trigger and the trigger lever.

Level 1 machines are equipped with an adjustable knockoff eccentric stud (Figure 9). The stud serves the same purpose as the trigger knockoff screw and will be covered in the escapement adjustment summary.

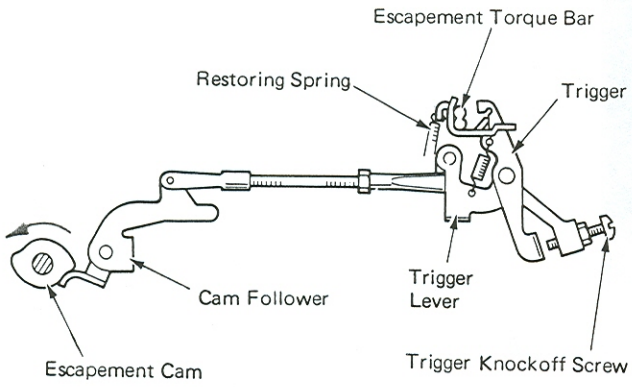

(Rest Position–Right Side View)

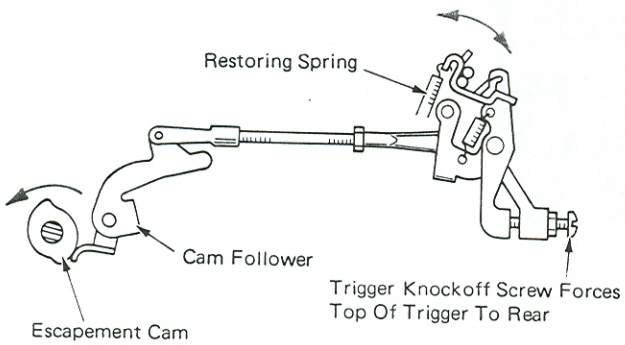

(Active Position–Right Side View)

Figure 8 – Trigger Knockoff

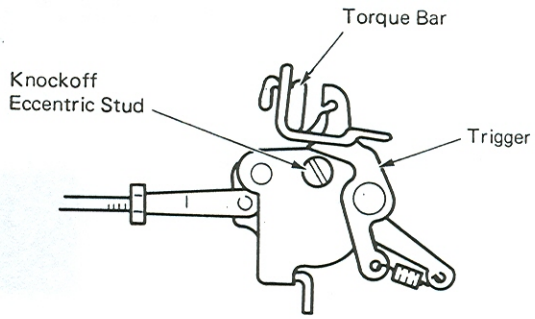

(Level 1 Rest Position – Right Side View)

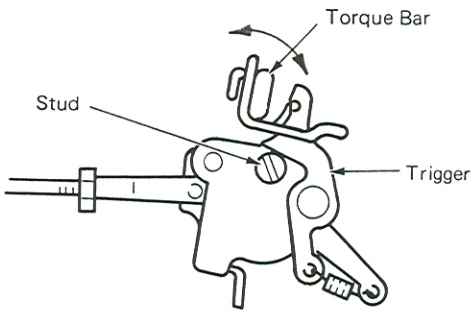

(Level 1 Active Position – Right Side View)

Figure 9 – Trigger Knockoff (Level 1)

CARRIER MOVEMENT

The mainspring is mounted near the back of the machine and engages the escapement shaft (Figure 10).

The escapement shaft extends forward through a backplate and the power frame. Located on this shaft are two drums. The escapement/tab cord is wound several turns around the escapement cord drum, then to the right over a guide roller just before passing through the right side of the machine. The cord passes around a tension pulley and back through the power frame and connects to the right-hand side of the carrier.

The carrier return cord is wound in the opposite direction around the carrier return cord drum, passes around two pulleys and connects to the left side of the carrier.

Mainspring tension is applied to the carrier through the escapement tab cord to move the carrier to the right during an escapement operation. As the escapement cord drum winds up cord, the carrier return cord drum unwinds cord. This allows the tension pulley to maintain constant tension on the carrier and also allows the mainspring to be rewound during a carrier return operation.

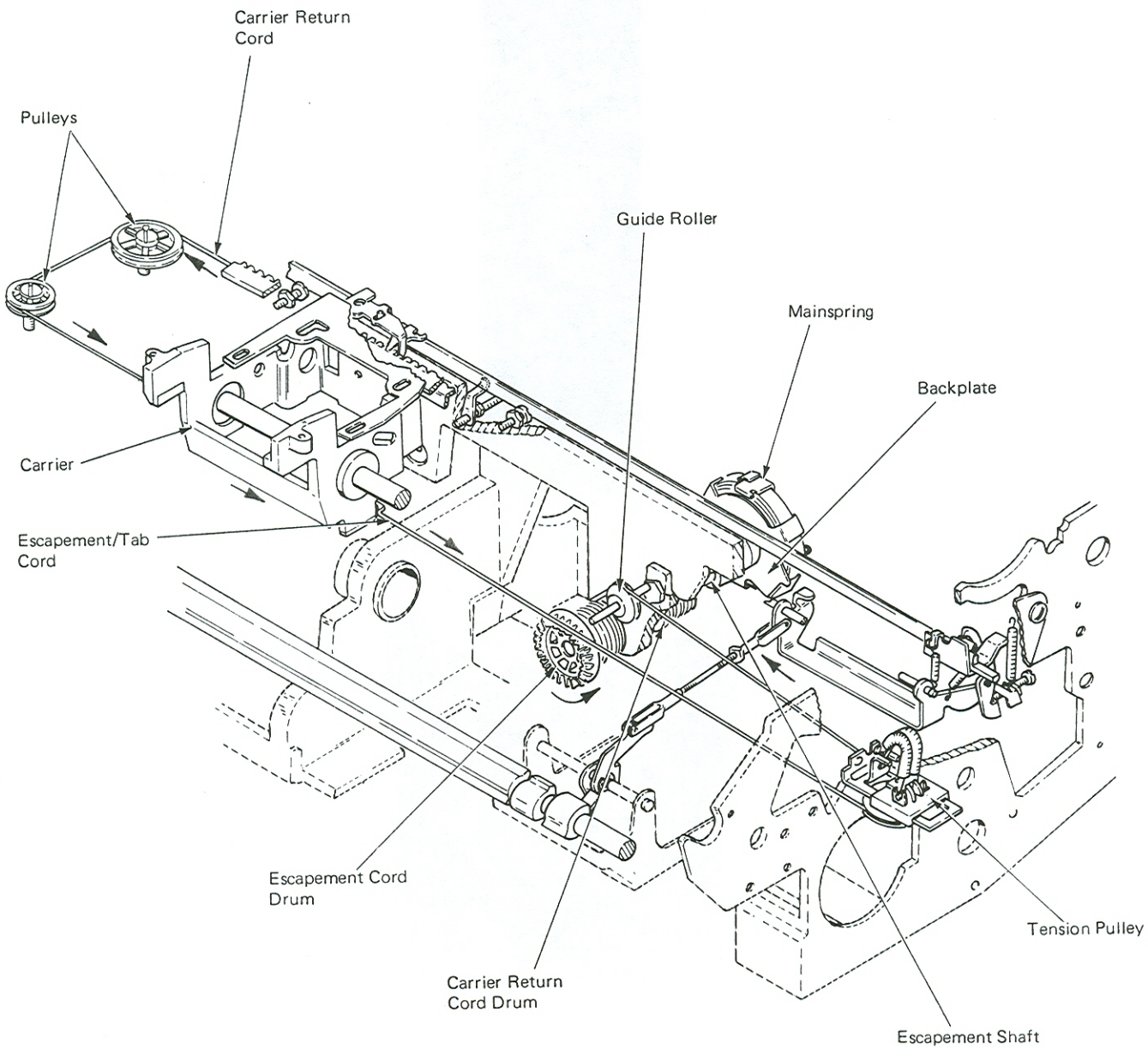

Figure 10 – Mainspring Tension

ESCAPEMENT (RB/S) OPERATIONAL THEORY

The rotary backspace (RB/S) escapement mechanism uses a gear on the carrier return cord drum that receives motion from a driver to move the carrier during a backspace operation. The vertical position of the escapement pawl is critical in machines with rotary backspace. The pawl must be centered in the escapement rack within the opening in the escapement rail. An escapement pawl guide bracket is mounted above the escapement pawl. The escapement pawl guide lug extends down from the bracket and is formed under the escapement pawl to control vertical movement. The escapement pawl vertical position is controlled by the vertical position of the carrier, which is adjustable. This is done by an elongated mounting slot in the rear carrier shoe. As the carrier shoe is adjusted left or right, the rear of the carrier is raised or lowered (Figure 1).

RB/S escapement functions in the same way as NRB/S escapement. The only differences are the escapement rack (covered in the Switch Pitch Section), the escapement pawl, the escapement pawl mounting and some adjustments.

RB/S machines use a steel cable in place of the nylon carrier return cord. Early level dual pitch machines use a steel cable for both the carrier return cord and the escapement cord.

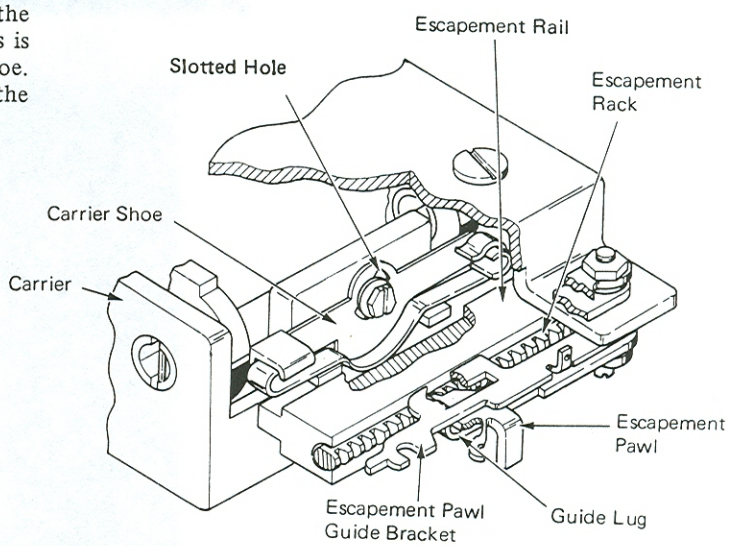

Escapement Pawl And Carrier Shoe Mounting (Rear View)

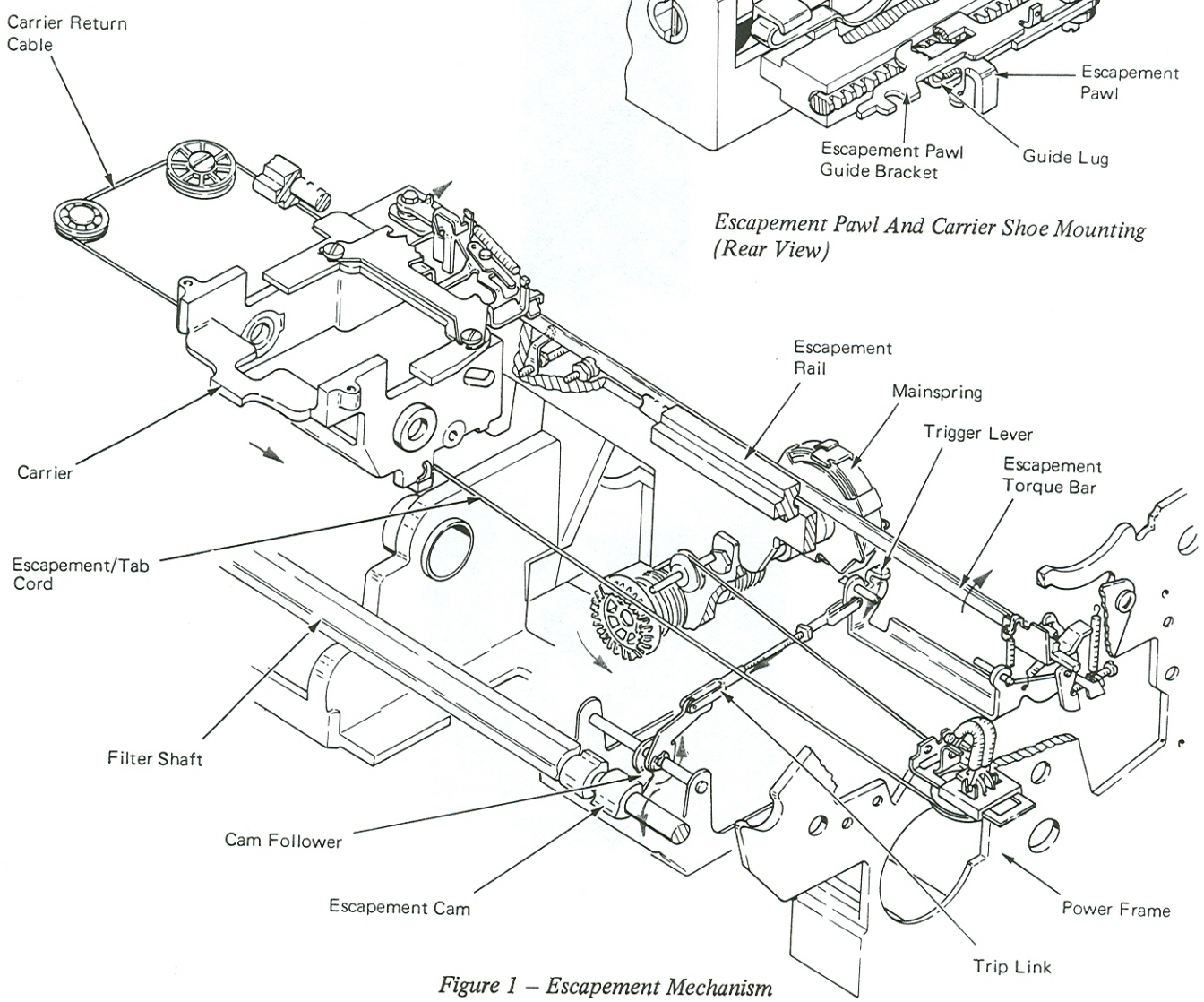

Figure 1 – Escapement Mechanism

ESCAPEMENT (NRB/S AND RB/S) ADJUSTMENTS

NOTE: Before any adjustments are performed in this section, switch pitch adjustments must be correct.

1. *Escapement Rack (NRB/S And RB/S)* – Rotate the print shaft so the keyway is down and adjust the escapement rail front to rear so the Hooverometer will just reach the distance from the print shaft to the escapement rail with the Hooverometer on the No. 1 scribe line using the following procedure:

   a. Loosen first three rail mounting screws from left end and adjust the left end. After adjusting the left end, tighten the first rail mounting screw. It is important that this screw is tight to prevent loss of left-to-right position of the rail when adjusting the right end.

   b. Loosen the remaining screws on the right end. Using the Hooverometer, adjust the center and tighten center screw. At this point, it may be necessary to bend the right end of the rail to match the left and center. Adjust the rail using the Hooverometer and tighten screws. This procedure will ensure the escapement rail is not bent and is parallel to the print shaft.

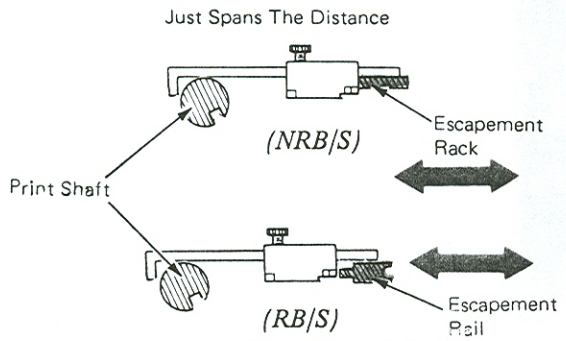

Hooverometer On Number One Scribe Line

2. *Escapement Rack Guide* – Loosen the two escapement rack guide screws and adjust the guide up and down, and front to rear so the guide will be centered around the escapement rack. The left end of the escapement rack is held in place by the escapement rack guide.

   NOTE: This adjustment should be done with the switch pitch selector gear removed from contact with the escapement rack gear. Readjust the escapement rack gear after making guide adjustment.

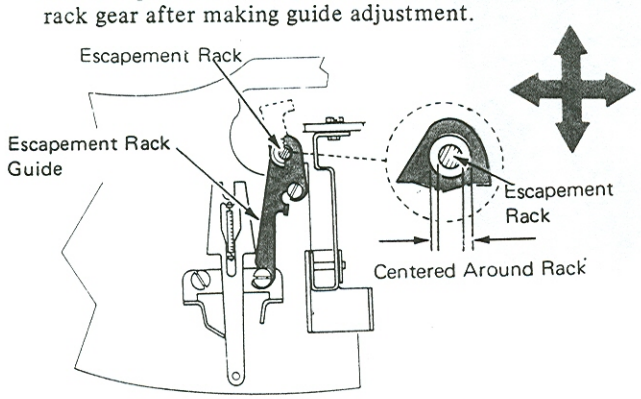

(Dual Pitch Only) *(Left Side View)*

3. *Escapement Pawl Guide Lug (RB/S Only)* – Form the escapement pawl guide lug for .001"-.004" (0.03-0.10 mm) clearance between the lug and the escapement pawl.

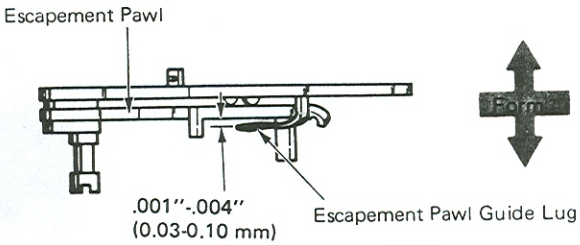

4. *Carrier Shoe (RB/S Only)* – Adjust the carrier shoe left or right to center the escapement pawl in the opening of the escapement rail.

   This adjustment may be observed by applying grease on the escapement rail approximately 2" (50.8 mm) from the right end. Type or space to track the escapement pawl through the grease. Carrier return and look down the rack from the right end and observe the track left by the escapement pawl in the grease. The track should be centered in the rack.

   NOTE: The front carrier support adjustment must be checked before making this adjustment.

   After making this adjustment, check carrier movement across the full writing line. The carrier shoe could tilt when tightening the mounting screw and cause the carrier to bind.

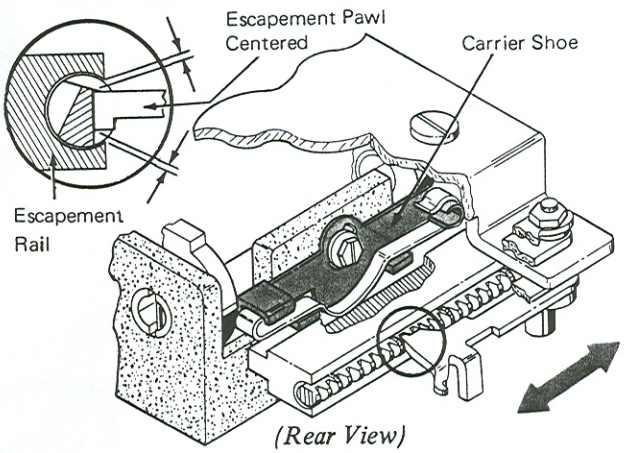

(Rear View)

5. *Carrier Buffer* – Adjust the carrier buffer front-to-rear to get .001"-.002" (0.03-0.05 mm) between the carrier buffer and the escapement rail. (Some machines may not have the carrier buffer and will not require this adjustment.)

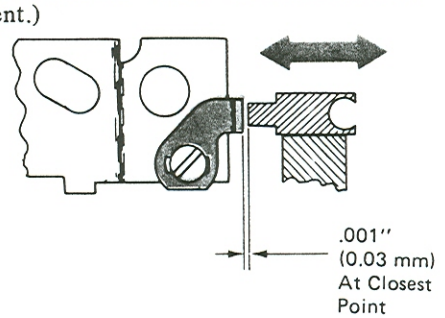

(Right Side View)

6. *Escapement Bracket (NRB/S)* – Position the escapement bracket parallel to the tab torque bar with .011"-.017" (0.28-0.43 mm) clearance on Level 1 and .010"-.012" (0.25-0.30 mm) on Level 2.

NOTE: This adjustment affects the tab adjustments.

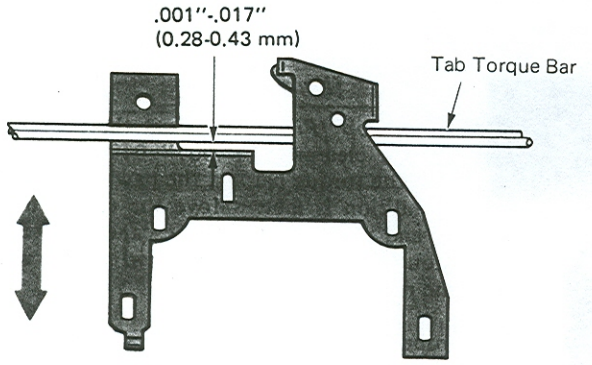

(Level 1 Top View)

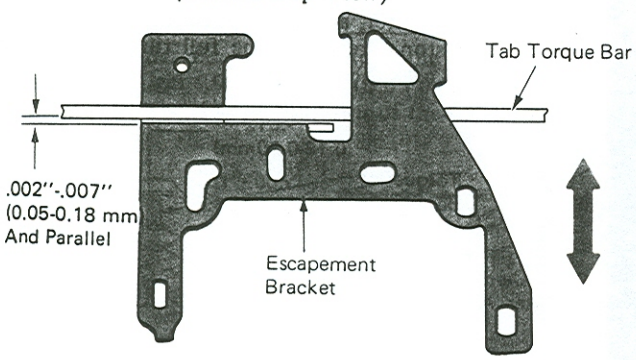

(Level 2 Top View)

Escapement Bracket (RB/S) – Position the escapement bracket front to rear so the front left side of the escapement pawl clears an escapement rack tooth by .043"-.047" (1.09-1.19 mm). This clearance can be seen from the bottom with the carrier just to the right of center.

The bracket must be parallel to the tab torque bar within .005" (0.13 mm). This parallel condition must be observed from the top.

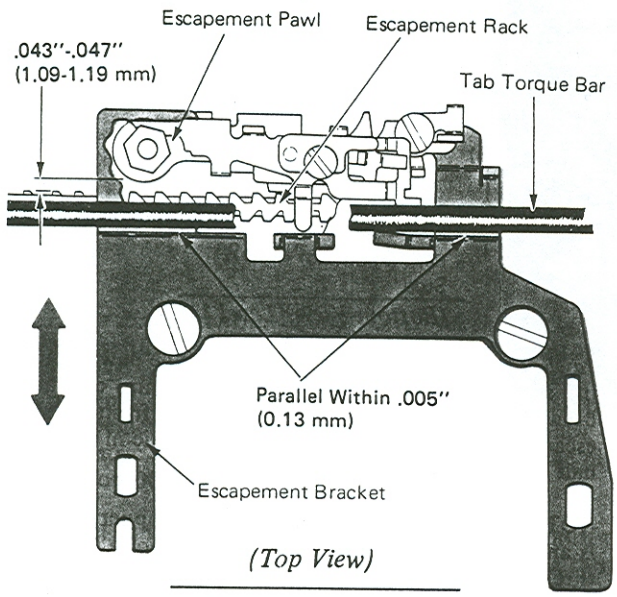

(Top View)

7. *Torque Bar (Preliminary)* – Move the torque bar backup screws away from the torque bar. Move the trigger upstop out of the way and disconnect the spacebar link (RB/S only) and move the spacebar latch lever screw away from the escapement trigger bracket (NRB/S). Disconnect the escapement link.

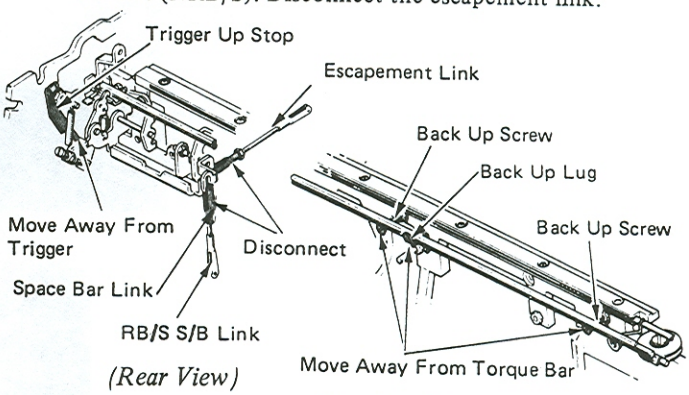

(Rear View)

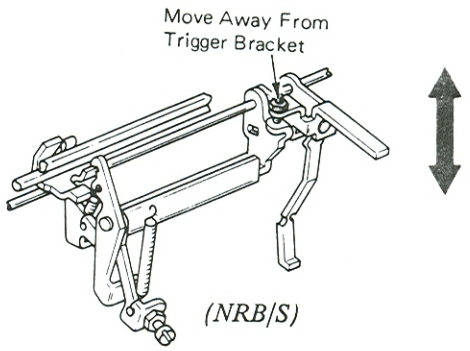

(NRB/S)

8. *Escapement Torque Bar (Level 1, NRB/S)* – Adjust the escapement torque bar .005"-.010" (0.13-0.25 mm) end play with the escapement trigger centered on the escapement bar lug.

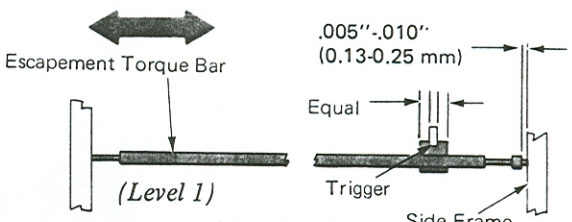

(Level 1)

(Top View)

9. *Pawl Mounting Stud (Preliminary)* – Move the pawl mounting stud as far away from the escapement torque bar as possible.

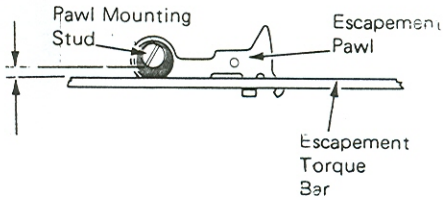

(Bottom View)(Level 1)

10. *Torque Bar Upstop (Preliminary)* – With the carrier at the left, adjust the torque bar upstop so the torque bar just touches the pawl tail.

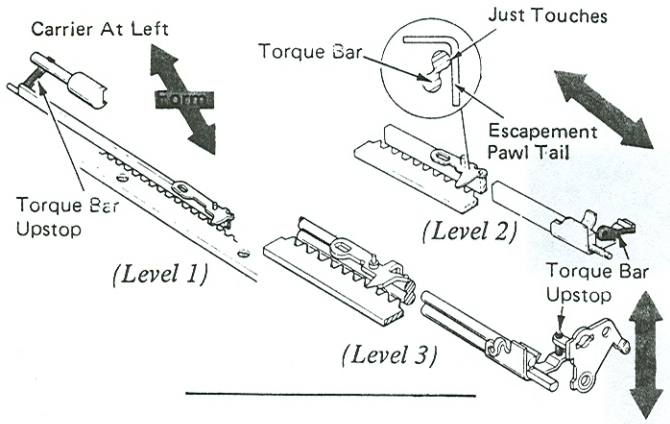

11. *Escapement Pawl Tail Clearance* – With the carrier at the right, adjust the tilt pulley bracket so that the torque bar just touches the pawl tail. Adjust as follows:

a. If the tilt pulley bracket does not have the dowel pin, adjust the bracket front-to-rear so the torque bar touches the escapement pawl tail. Adjust the bracket top-to-bottom so that the pawl tail overlaps the escapement torque bar on the right side the same as the left side.

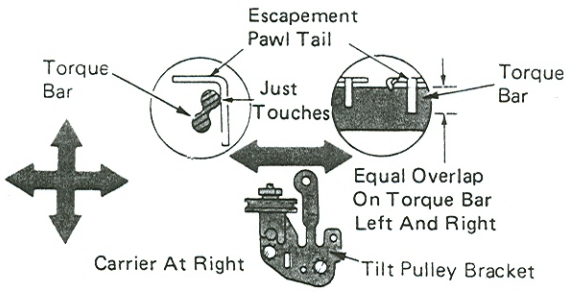

b. If the tilt pulley bracket has a pin in it, it is possible to drive the pin in and adjust as in step 11a.

12. *Center Torque Bar Backup Screw (Final)* – Move the carrier to the center and adjust the center backup screw so that the escapement torque bar touches the escapement pawl tail.

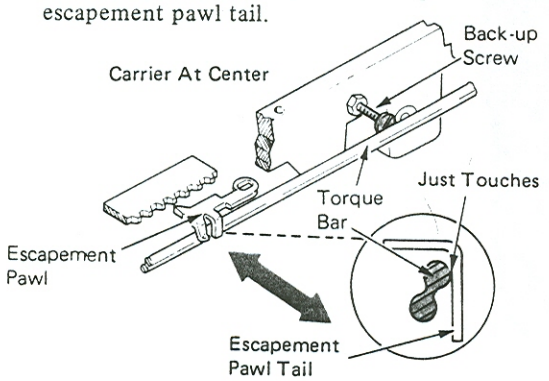

(Rear View)

13. *Left Torque Bar Backup Screw (Final)* – Adjust the left torque bar backup screw to just touch the escapement torque bar.

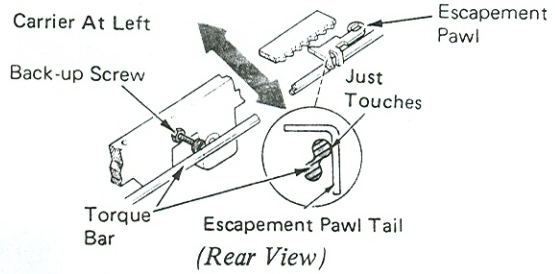

(Rear View)

14. *Torque Bar Upstop (Final)* – Adjust the torque bar upstop to get a clearance of .007"-.012" (0.18-0.30 mm) between the torque bar and the pawl tail after the following condition is met: Move the carrier to the left, center and right. Ensure the escapement torque bar is just touching the escapement pawl tail the whole length of the rail.

NOTE: Proper adjustment of machines with a torque bar upstop screw can be done by ensuring the escapement torque bar is just touching the escapement pawl tail at the left, center, and right and then backing the torque bar upstop screw out one full turn. This will give the proper clearance.

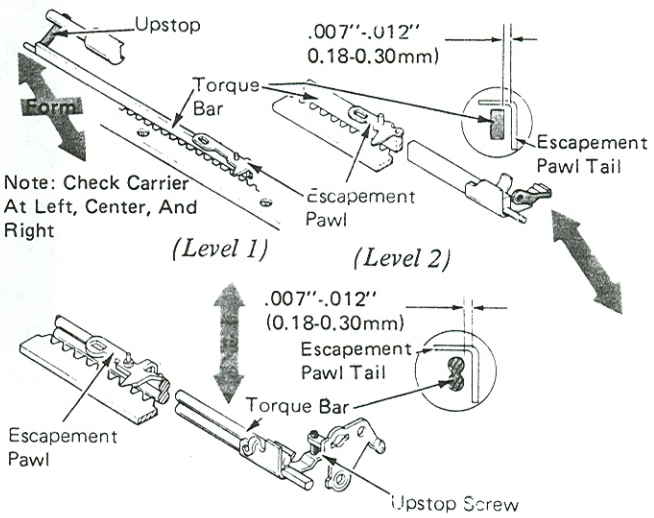

15. *Pawl Mounting Stud (Level 1)* – Adjust the pawl mounting stud around to get .001" (0.03 mm) clearance between the mounting stud and the front of the escapement torque bar. Keep the eccentric in the left half of the turn.

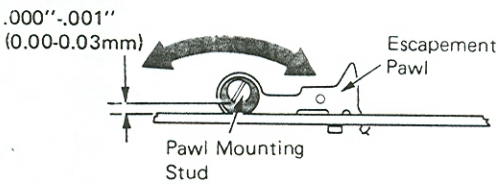

(Bottom View)(Level 1)

Pawl Mounting Stud (RB/S) – Adjust the pawl mounting stud to get .000"-.001" (0.00-0.03 mm) clearance between the mounting stud and the front of the escapement torque bar. Keep the eccentric in the right half of the turn.

NOTE: The nut is a left-hand thread. Copper coloring is an industry standard for identification of a left-hand thread.

16. *Tab Torque Bar Parallel* – With the carrier at the left, check the clearance between the tab torque bar and escapement bracket. Move the carrier to the right and form the tilt pulley bracket lug so the clearance at the closest point between the tab torque bar and escapement bracket matches left side. The carrier return latch keeper must be removed to make this adjustment.

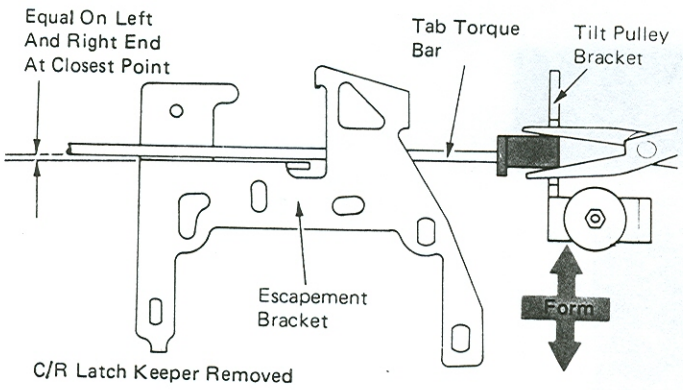

17. *Torque Bar Backstop* – Adjust the backstop front-to-rear to get .001"-.005" (0.03-0.13 mm) clearance between the stop and the rear of the torque bar.

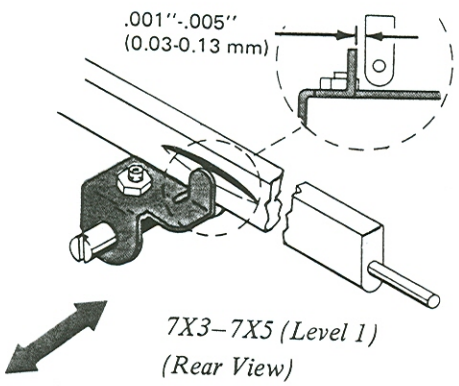

7X3–7X5 (Level 1)
(Rear View)

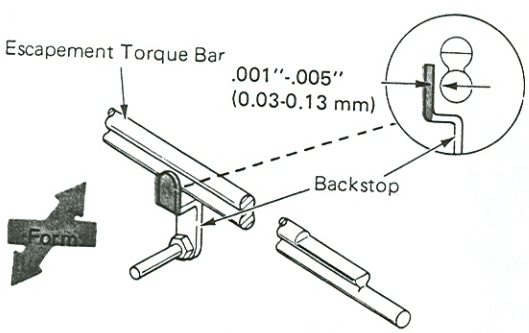

7X3–7X5 (Level 2)
(Rear View)

18. *Pivot Pin Eccentric (Early Level Machine Only)* – Adjust the eccentric collar with the high point up so that it touches the operational latch bracket. This prevents the pivot pin from ending during a print escapement operation. On long carriage machines, the eccentric should also be adjusted laterally on the pivot pin for .002"-.005" (0.05-0.13 mm).

NOTE: The eccentric may require readjustment if the rest position of the pivot pin is changed during carrier return adjustments.

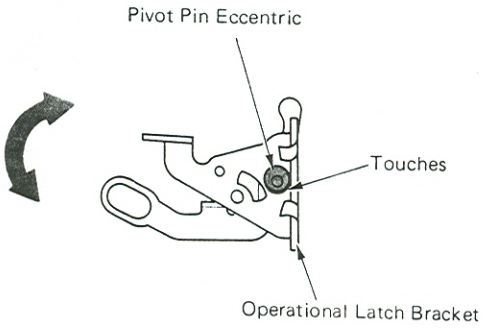

(Left Side View)

19. *Escapement Cam* – Reconnect the escapement link and adjust the escapement cam on the filter shaft so the cam follower roller is resting at the start of the low point of the cam with the machine at rest.

On machines equipped with the early level spacebar lockout mechanism, the lockout cam adjustment must be checked each time the escapement cam adjustment is changed. Changing the position of the escapement cam could allow the lockout cam to keep the spacebar mechanism from operating.

NOTE: Escapement should occur just after print.

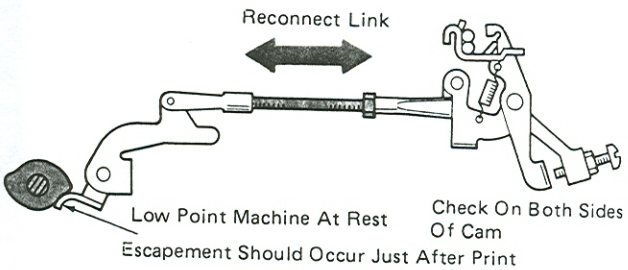

World Trade (9XX) – Escapement should occur after print when the distance between typehead and the platen (impression control at 5) is .042"-.060" (1.07-1.52 mm).

20. *Escapement Trip Link* – With the machine latched at rest, adjust the escapement trip link to get .007"-.010" (0.18-0.25 mm) clearance between the hook on the trigger and the extension on the escapement torque bar. Be sure the trigger lever upstop and spacebar motion adjustments are not limiting the trigger.

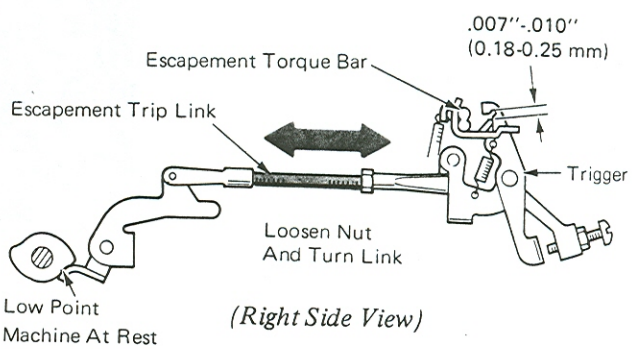

(Right Side View)

21. *Trigger Knockoff* – Adjust the trigger knockoff so the escapement trigger will cam off the torque bar lug when the escapement pawl clears the rack by .010"-.015" (0.25-0.38 mm).

Level 1 – Adjust the trigger knockoff stop to get .010"-.015" (0.25-0.38 mm) clearance between the escapement pawl and the rack.

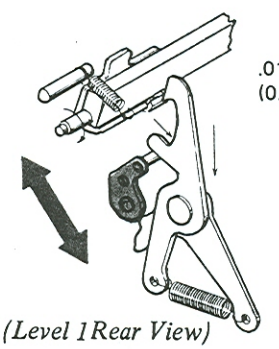

(Level 1Rear View)

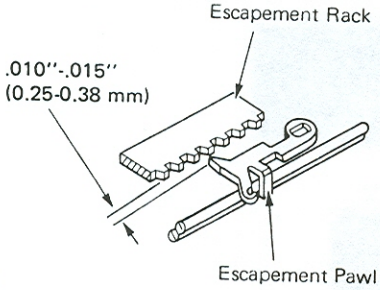

(Rear View)

Level 2 – Adjust the eccentric to get .010"-.015" (0.25-0.38 mm) clearance between the escapement pawl and the rack.

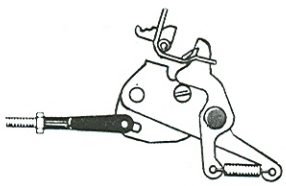

(Level 2 Right Side View)

Level 3 – Adjust the knockoff adjusting screw to get .010"-.015" (0.25-0.38 mm) clearance between the escapement pawl and the rack.

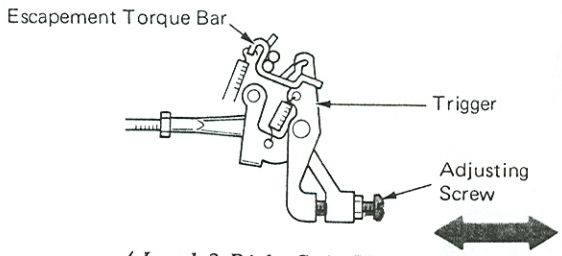

(Level 3 Right Side View)

22. *Trigger Lever Upstop* – With all parts at rest, adjust the trigger lever upstop vertically to get .001"-.005" (0.03-0.13 mm) clearance between the upstop and the trigger lever.

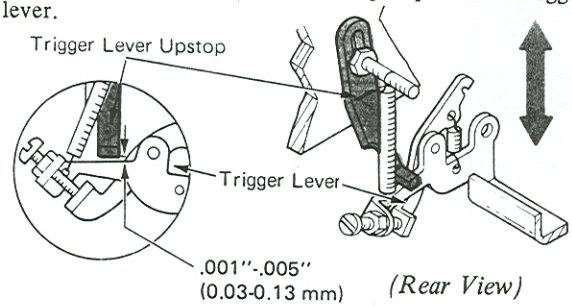

(Rear View)

Make sure the trigger upstop is centered between its restoring spring and the trigger mounting lug.

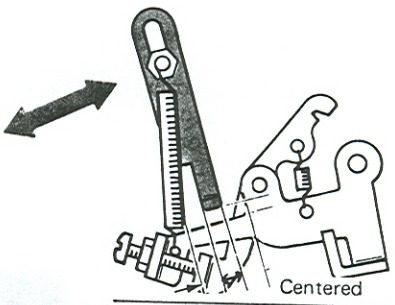

23. *Spacebar Motion* – Adjust the spacebar motion using the proper procedure:

a. *RB/S* – Adjust the spacebar link for .001"-.012" (0.02-0.30 mm) between the clevis pin and the bottom of the slot in the trigger lever.

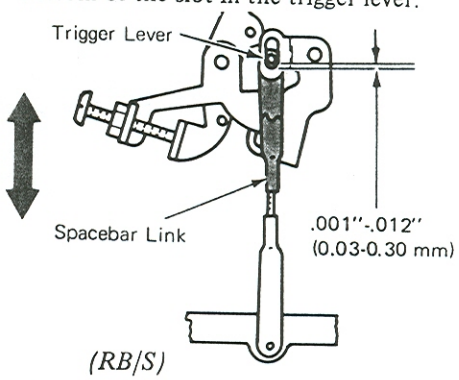

(RB/S)

b. *NRB/S* – Adjust the spacebar latch lever screw to get a .007"-.010" (0.18-0.25 mm) clearance between the escapement trigger and the escapement torque bar.

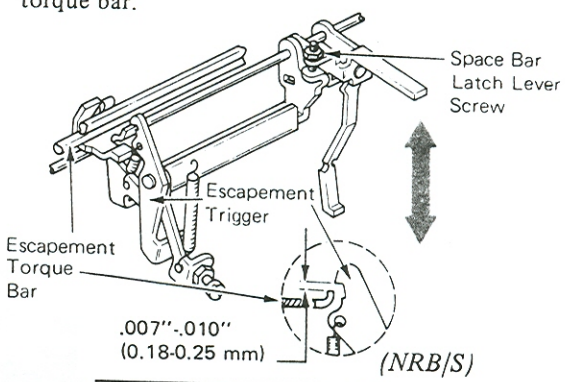

(NRB/S)

24. *Escapement Rail Parallel To Escapement Torque Bar (Final Check)* – The following procedure may be used to ensure the escapement rail, print shaft and escapement torque bar are parallel. With the machine on, pull the escapement trigger down until the escapement pawl just clears the rack. While holding the carrier with the left hand, move the carrier left and right the full length of the writing line several times, listening to the pawl drag on the tips of the escapement rack. A great difference in sound between the left, center and right ends means that the torque bar and escapement rail are not parallel. Check that the escapement rail is parallel and the escapement pawl tail clears the escapement torque bar by .007"-.012" (0.18-0.30 mm) across the writing line. Readjust the necessary adjustments to get this condition.

When all adjustments are correct, the carrier should space correctly when slight pressure is put on the left side of the carrier during a repeat spacebar or repeat underscore operation.

25. *Mainspring Hub – Level 1 – (RB/S Only)* – Adjust the mainspring hub for .001"-.004" (0.03-0.10 mm) end play of the escapement shaft in the rear escapement bearing. This adjustment should be made with the escapement shaft collar loose. Check the carrier return and tab pinion backlash after making this adjustment.

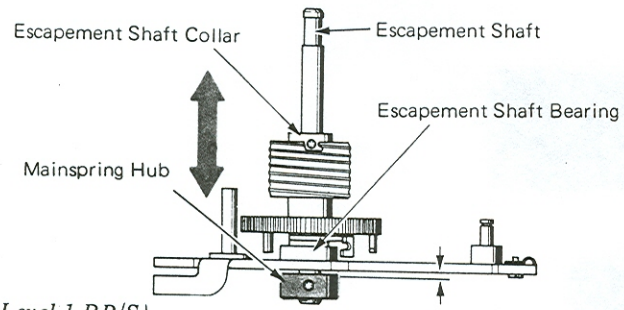

(Level 1 RB/S)
(All Steel Transport) *(Top View)*

26. *Escapement Shaft End Play* –

a. *Dual Transport And All Nylon Transport* – Adjust the carrier return drum front to rear to get minimum end play and no binds, with the play removed in the escapement shaft toward the front.

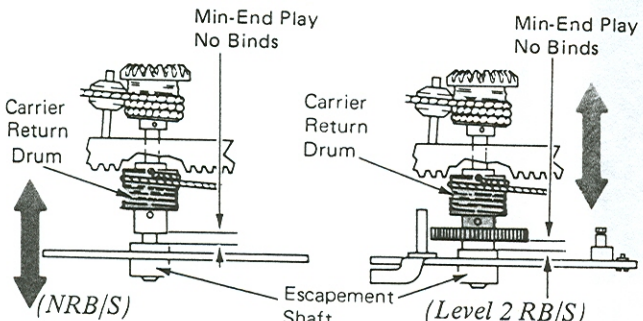

(NRB/S)
(All Nylon Transport)
(Level 2 RB/S)
(Dual Transport)

b. *All Steel Transport* – Adjust the escapement shaft collar for .001"-.004" (0.03-0.10 mm) end play of the carrier return/backspace cable drum on the escapement shaft.

NOTE: Check the carrier return and tab pinion backlash adjustments after making this adjustment.

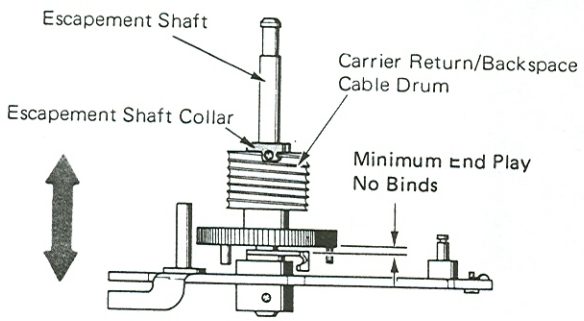

(Top View)

(Level 1 RB/S)
(All Steel Transport)

27. *Mainspring* – Adjust the mainspring for 1/2-3/4 lb. (226.8-340.2 g) of tension as the carrier tabs through the right-hand margin.

Manually latch the carrier return mechanism and rotate the turning wheel (while counting the revolutions of the escapement shaft) until the mainspring is wound the proper number of turns.

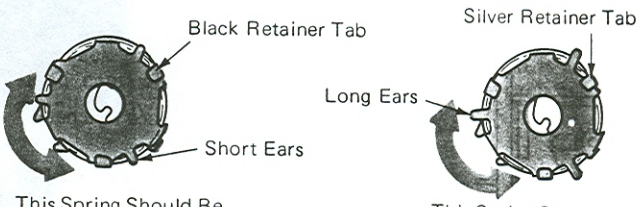

(Rear View)

28. *Idler Pulley Eccentric* – Adjust the eccentric mounting stud for the front idler pulley so that the pin is above center on the eccentric. The pin should be turned toward the left slightly.

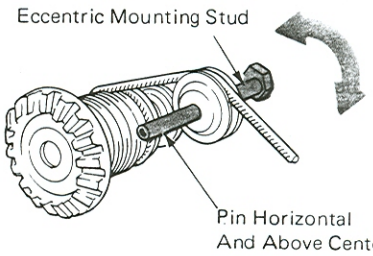

29. *Cord Tension (Dual Transport And All Nylon Transport)* – With the cords properly wound, adjust the carrier return cord drum so that the outer edge of the nylon pulley bracket lines up with the mark on the mounting bracket.

CAUTION: Be sure to remove all end play from the escapement shaft before tightening the carrier return cord drum. End play is removed by holding the escapement shaft forward while the cord drum is moved to the rear against the rear bearing. Hand or power cycle, then recheck adjustment with the carrier at the far right-hand margin.

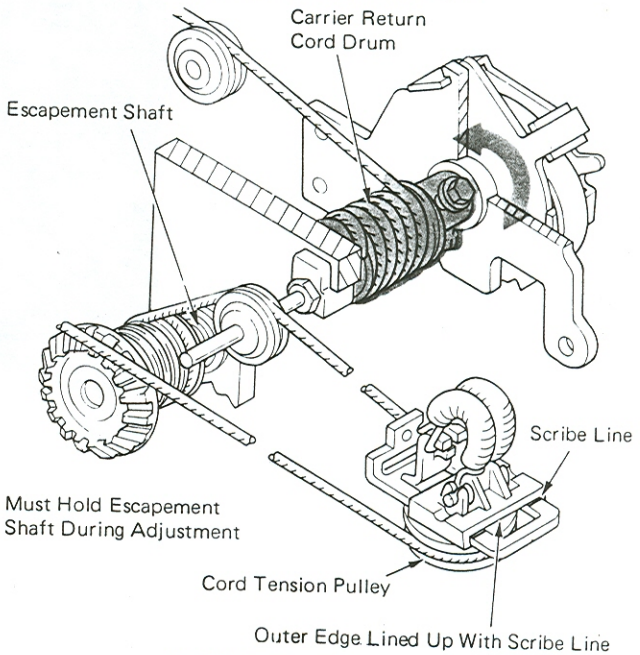

30. *Transport Cable Tension (All Steel Transport)* – Adjust the right-hand cable pulley left or right so the cable tension arm clears the stop stud on the backspace ratchet by .040"-.050" (1.02-1.27 mm).

NOTE: If the right-hand cable pulley reaches either limit of the adjustment slot, the rotational position of the tab/escapement cable drum must be changed on the escapement shaft.

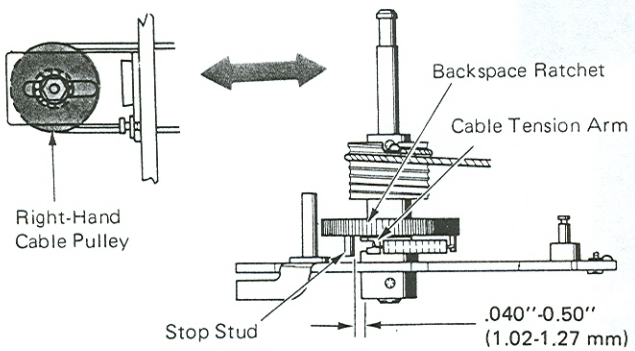

(Top View)

OPERATIONAL CONTROL OPERATIONAL THEORY

The operational control mechanism contains all of the parts necessary to activate the spacebar, backspace, carrier return and index operations.

The operational theory for each of these four operations is covered in detail in their own sections of this manual. The operational theory and adjustments in this section will apply to all of the operational control mechanisms. The operational control mechanism consists mainly of four interposers and an operational cam assembly (Figure 1). Each interposer performs the same two basic functions. First, it conditions the machine components so that only the desired operation will take place and second, it releases one of the two cams so that power will be supplied to that mechanism.

The two operational cams are located on the right side of the operational shaft just inside the power frame. The left-hand cam is a double-sided cam which turns 180 degrees during each cycle. This cam supplies power to the spacebar and backspace mechanisms. The right-hand cam is a single-sided cam which rotates 360 degrees during each cycle. It supplies power to the carrier return and index mechanisms.

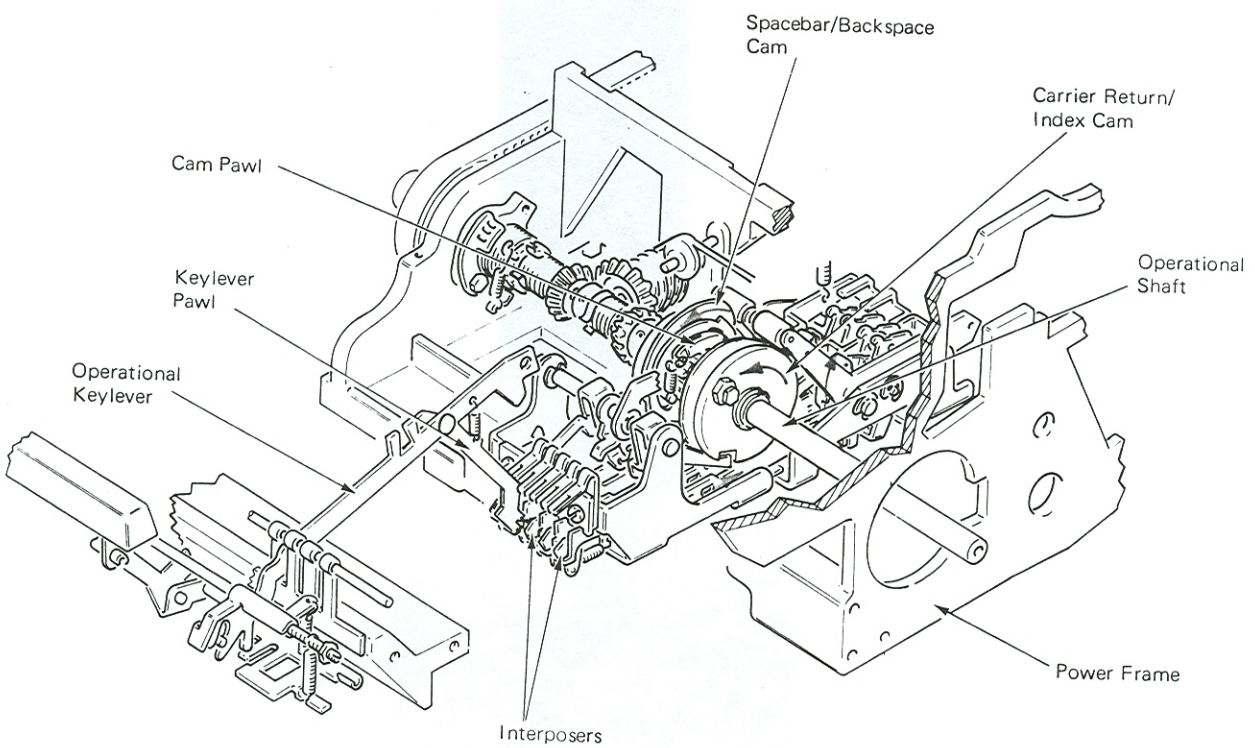

Figure 1 – Operational Control Mechanism

INTERPOSER RELEASE

An operation is activated by depressing one of the operational keylevers (Figure 2).

When an operational keylever is depressed, a lug on the keylever pawl contacts the interposer, forcing it down to release the interposer latch from the interposer latch plate (Figure 2).

INTERPOSER FUNCTIONS

As soon as the interposer latch has cleared the latch plate (Figure 2), the interposer is pulled to the rear by the interposer spring. When the interposer moves to the rear, it performs two functions:

1. A lug on the bottom of the interposer contacts the clutch release arm, rotating it down at the front, allowing the cam wheel to be released. When the clutch release arm releases the cam wheel, the cam wheel will rotate, allowing the cam pawl to engage the operational clutch ratchet. The operational clutch ratchet is attached to the operational shaft and rotates when the machine is on. The operational cams are mounted on shoulders of the operational clutch ratchet. The operational cams remain at rest on these shoulders until the cam pawl engages the ratchet. When the cam pawl engages the operational clutch ratchet, the cam turns with the operational shaft and ratchet.

2. An extension at the rear of the operational interposer positions an operational latch under its cam follower.

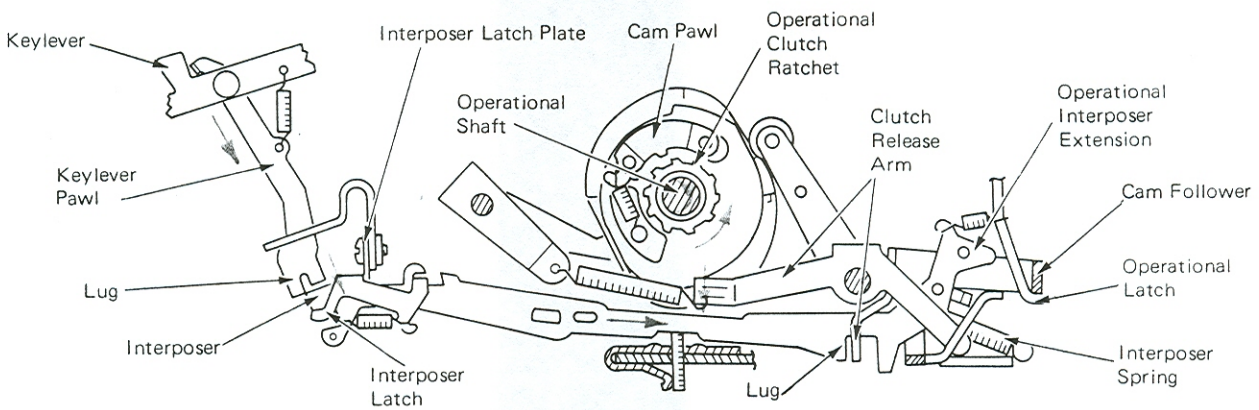

Figure 2 – Operational Control Mechanism (At Rest) (Right Side View)

CAM FUNCTIONS

The rotation of the operational cam assembly performs two functions (Figure 3).

1. The cam follower follows the cam surface of the operational cam from the low point to the high point. This causes the cam follower to pivot around its mounting shaft, pulling down on the operational latch. The power to operate each of the operational functions is taken from an operational latch. A detailed description of each operational function, starting at the operational latch, can be found in their section of this manual.

2. The operational cam follower also contacts the interposer restoring lever and causes it to restore the operational interposer forward, allowing the interposer latch to relatch on the interposer latch plate.

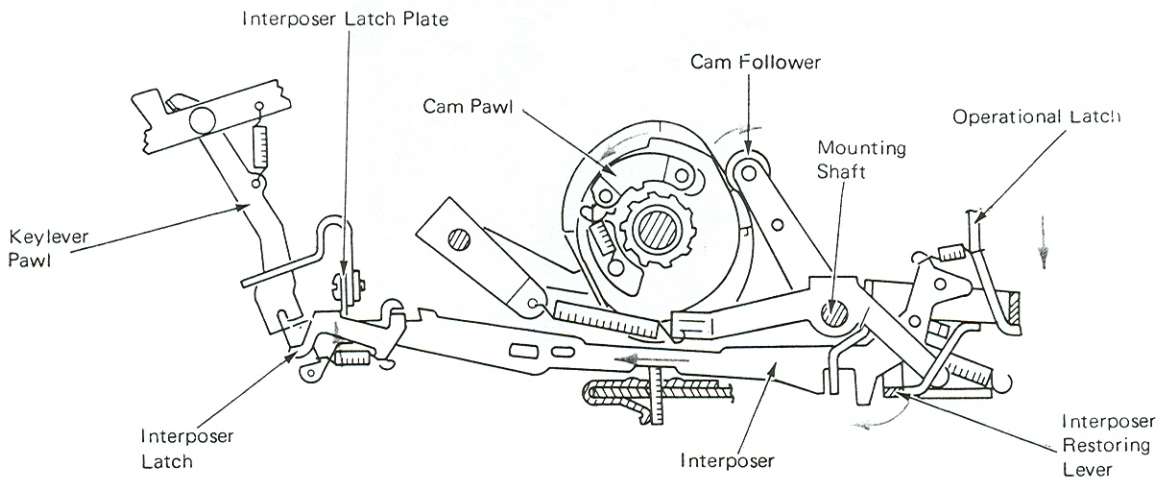

Figure 3 – Cam And Interposer Function (Right Side View)

CHECK RING

As the operational cam completes its rotation, the cam wheel contacts the clutch release arm, which pivots the cam pawl out of the operational ratchet (Figure 4). Continued rotation of the cam allows the check pawl to engage a notch in the check ring which is mounted on the opposite side of the cam (Figure 5). The check pawl holds the cam in the rest position, ensuring that the cam pawl does not reengage the operational ratchet until the next operation.

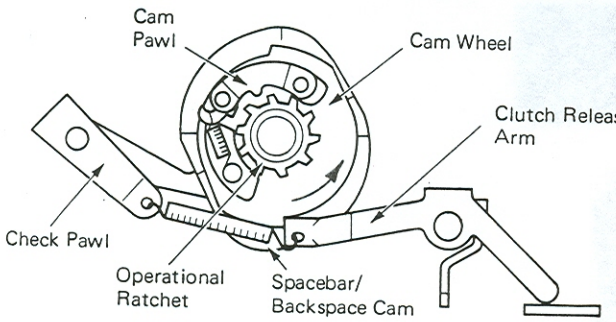

Figure 4 – Cam Wheel (Right Side View)

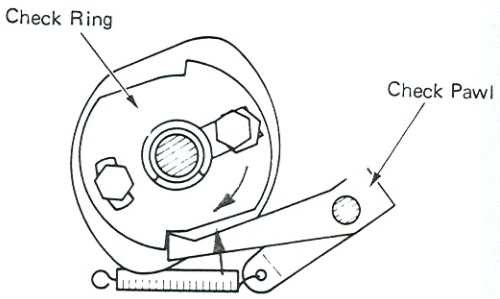

Figure 5 – Check Ring (Left Side View)

REPEAT OPERATION

Repeat operation of an operational mechanism can be done by preventing the interposer from relatching against the interposer latch plate (Figure 6). A second lug, called the repeat lug, on the keylever pawl is used to prevent the relatching of the interposer when a keylever is depressed in the repeat mode. In the case of carrier return, the repeat lug on the keylever pawl is formed to the right above the index interposer. Depressing the carrier return keylever into the repeat mode causes the index interposer to be released, resulting in additional linespacing.

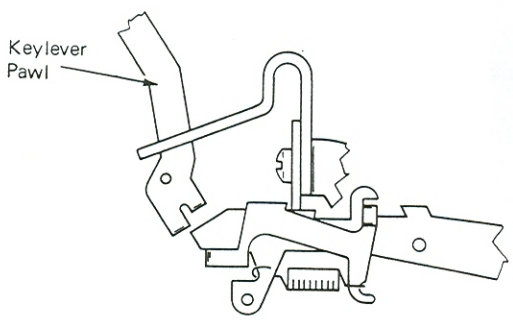

Parts At Rest

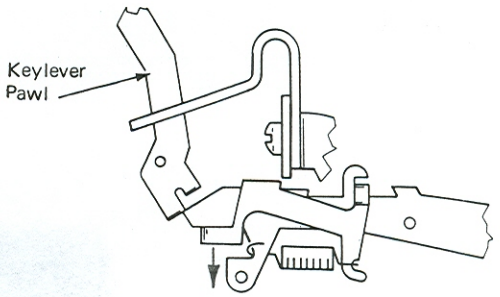

Release Point Of Single Operation

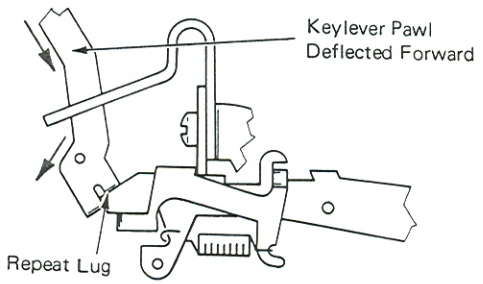

End Of Single Operation

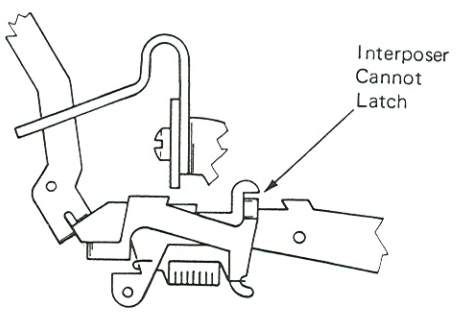

Repeat Operation

Figure 6 – Keylever Pawl Operation (Right Side View)

OPERATIONAL CONTROL ADJUSTMENTS

1. *Operational Shaft Support* – Adjust the operational shaft support front-to-rear to support the operational shaft with no binds.

NOTE: Bearing centered on support.

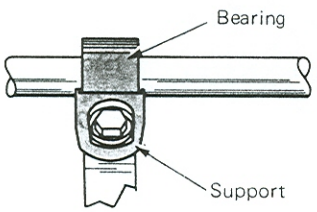

2. *Operational Shaft Position And End Play* – Position the operational shaft laterally so the teeth of the escapement cord drum and the carrier return pinion are even while maintaining .002"-.004" (0.05-0.10 mm) end play of the operational shaft. On the model 7X1, this adjustment is controlled by the operational cam ratchet and the shift clutch arbor. On longer machines, the position is controlled by a collar attached to the operational shaft and the shift clutch arbor.

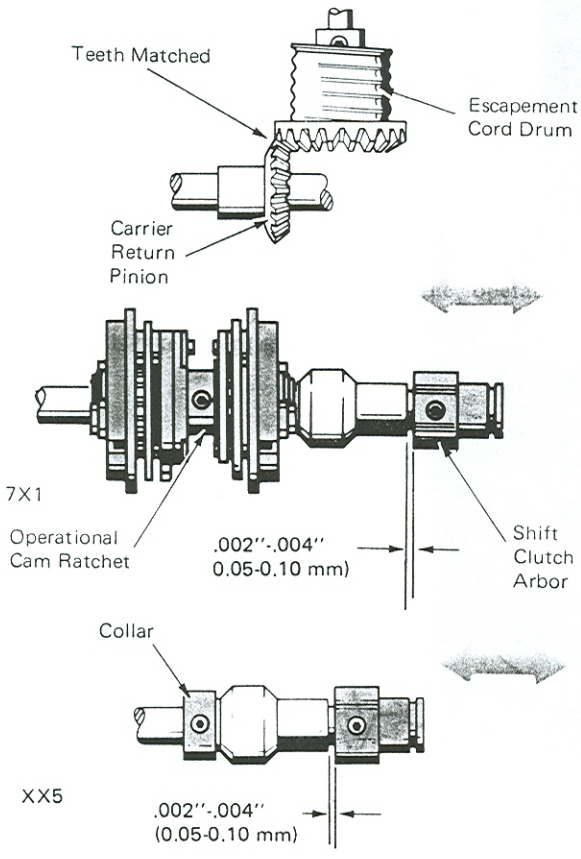

3. *Carrier Return Pinion Backlash* – Adjust the escapement cord drum gear front to rear to get .002"-.004" (0.05-0.10 mm) backlash between the carrier return pinion and the escapement cord drum gear while holding the escapement shaft to the rear.

NOTE: Recheck adjustment No. 1 after making this adjustment.

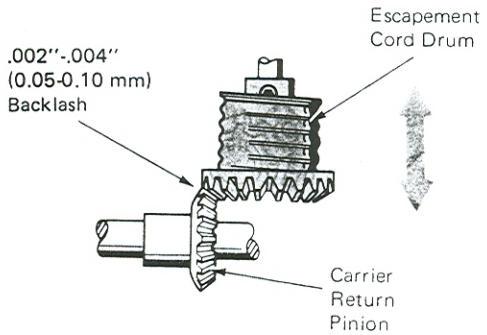

4. *Carrier Return Pinion Side Play* – Adjust the torque limiter hub left or right so there is minimum clearance with no binds between the carrier, the return pinion and the torque limiter arbor. There should be .002"-.004" (0.05-0.10 mm) backlash between the carrier return pinion and the escapement cord drum gear.

NOTE: Check with power on.

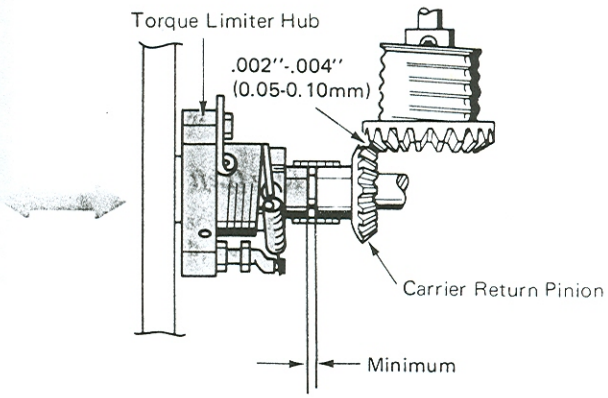

5. *Tab Pinion Backlash* – Adjust the tab governor assembly left or right to get .002"-.004" (0.05-0.10 mm) backlash between the tab pinion and the escapement cord drum gear, with the play in the escapement shaft removed to the rear. The pinion should have minimum end play between the tab governor hub and collar, yet still rotate freely.

NOTE: Check with power on.

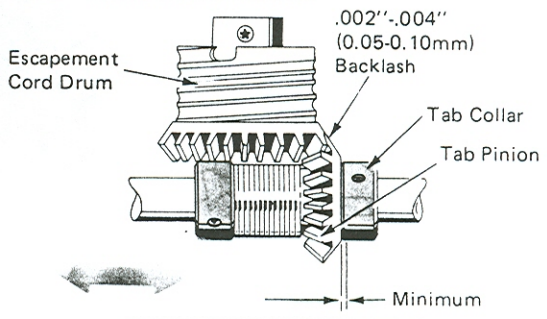

6. *Keylever Pawl Overlap* – Adjust each keylever pawl guide so the keylever pawls overlap their interposers by .035"-.045" (0.89-1.14 mm) with both parts at rest. The index keylever pawl guide should be adjusted for .040"-.060" (1.02-1.52 mm) overlap. This overlap ensures proper repeat/nonrepeat operation.

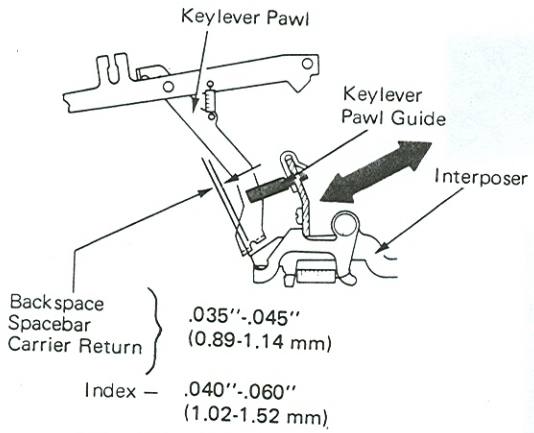

(Level 1) (Right Side View)

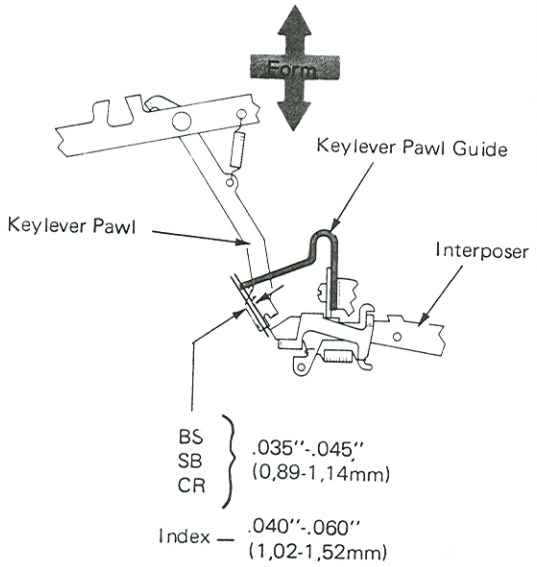

(Level 2) (Right Side View)

7. *Keylever Pawl To Interposer Clearance* –

Levels 1 And 2 – Adjust the interposer latch plate for .030"-.035" (0.76-0.89 mm) between the index keylever pawl and interposer.

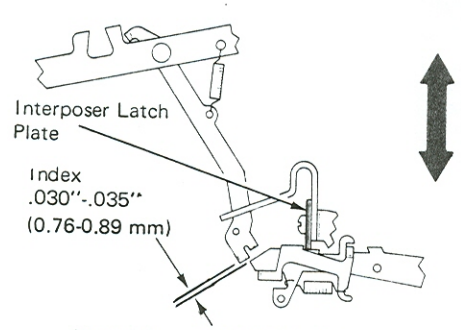

(Level 2 – Right Side View)

Level 1 – Adjust the spacebar keylever eccentric for a clearance of .005"-.015" (0.13-0.38 mm) between the keylever pawl and the interposer.

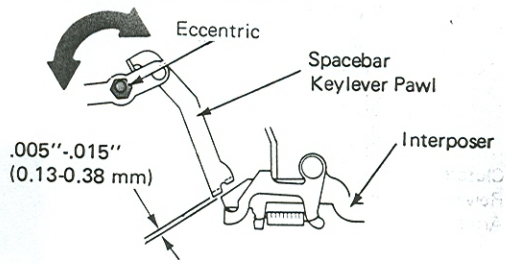

(Level 1 – Right Side View)

Level 2 – Adjust the spacebar keylever adjusting slot for .005"-.015" (0.13-0.38 mm) clearance between the keylever pawl and spacebar interposer.

Levels 1 And 2 – Adjust the keylever slots for a clearance of .020"-.030" (0.51-0.76 mm) between the backspace and carrier return keylever pawls and their interposers.

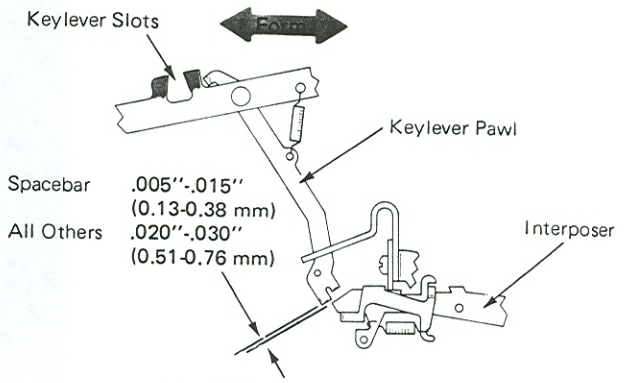

(Level 1 & 2 – Right Side View)

8. *Operational Cam Check Ring* – Adjust the operational cam check ring eccentric so that .010"-.030" (0.25-0.76 mm) exists between the tip of the cam pawl and the teeth of the operational cam ratchet with the cam latched in the rest position.

NOTE: Both the check ring mounting studs must be loosened before making this adjustment.

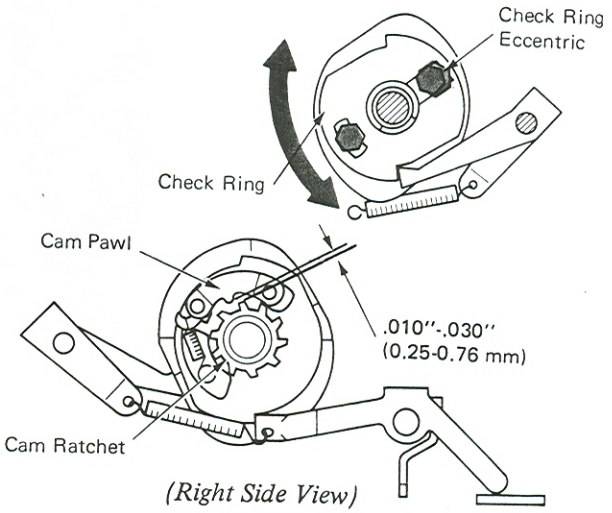

(Right Side View)

9. *Operational Cam Position* – Position the operational cam assembly left to right so that the clutch release arm for both the single- and double-sided cams has equal lateral position on the clutch wheel.

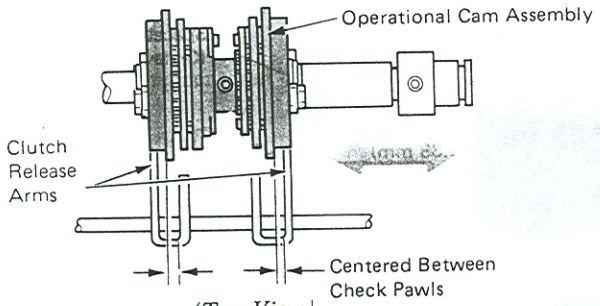

(Top View)

10. *Release Arm Overlap* – Form the operational cam release arms left-to-right to get the maximum amount of overlap on the clutch wheel as possible without touching the cam.

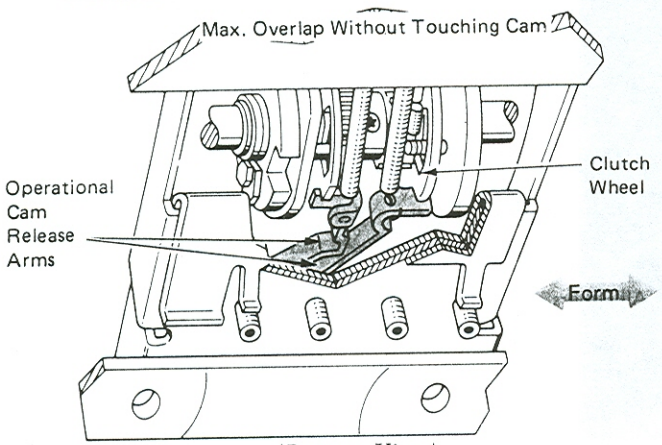

(Bottom View)

11. *Clutch Release Arm Overlap* – Form the adjustable stop lugs on the operational control bracket so each clutch release arm engages its clutch wheel by .030"-.040" (0.76-1.02 mm). This adjustment may be observed by measuring the amount of clearance between the stop lugs and the lower extension of each clutch release arm when the release arm has released the clutch wheel and is resting against the high side of the clutch wheel tooth.

NOTE: Interposer should remain latched with the operational cam released manually to check this adjustment.

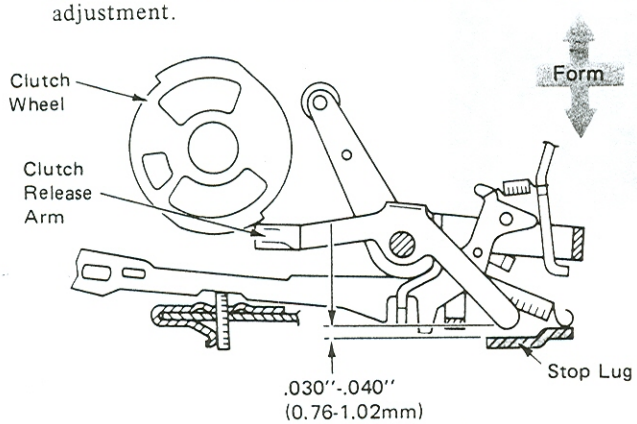

(Right Side View)

12. *Clutch Release Arms* – Form the lug at the bottom of each clutch release arm so it clears the operational interposer lugs by .030"-.040" (0.76-1.02 mm) with the operational interposers and operational cams at rest. This adjustment ensures the proper timing of the operational cam in relationship to the rest of the mechanism.

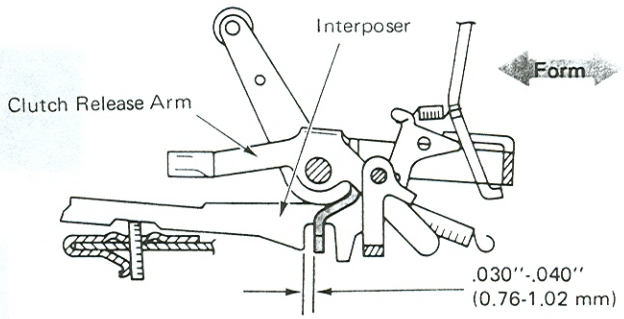

(Right Side View)

13. *Interposer Restoring Bail* – Form the lug at each side of the restoring bail so the interposers will be restored forward .010"-.030" (0.25-0.76 mm) past their latching point when either cam is operated. The lugs should be formed front-to-rear to get this adjustment. Forming the lugs forward increases the throw of the interposers. This adjustment ensures positive relatching of the interposers without excessive overthrow.

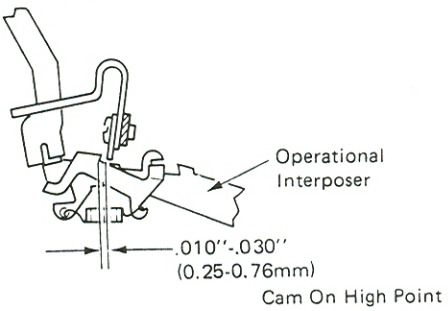

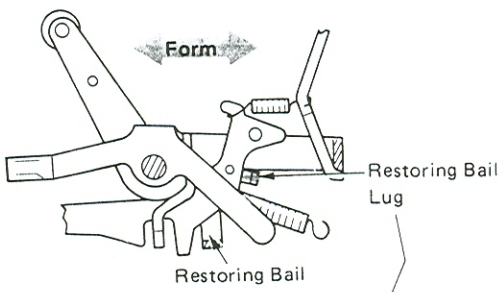

(Level 1)

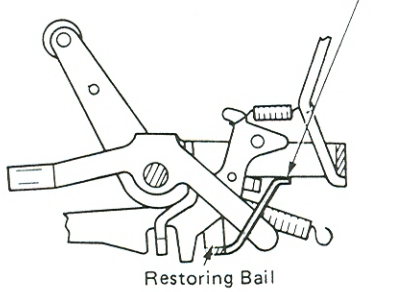

(Level 2)

14. *Interposer Adjusting Screws* – Adjust the three interposer adjusting screws so a front-to-rear clearance of .005"-.015" (0.13-0.38 mm) exists between all the operational latches and their cam followers. Adjust the index interposer adjusting screw to match the approximate position of the other adjusting screws.

    This adjustment may be checked by operating the operational cams enough to move the cam followers down slightly at the rear. With the machine on its back, the latches can be pushed against the cam followers to estimate the clearance.

NOTE: On RB/S machines only, the spacebar interposer adjusting screw should be adjusted equal to the backspace screw.

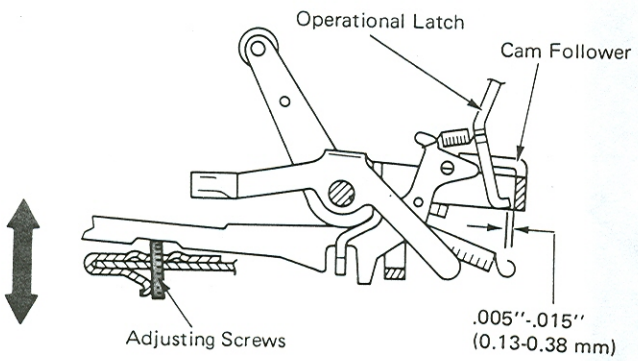

(Right Side View)

BLANK PAGE IN MANUAL FOR ADDING NOTES

SPACEBAR OPERATIONAL THEORY

The purpose of the spacebar mechanism is to provide a means of moving the carrier to the right one space at a time without printing. The spacebar is mounted at the front of the keyboard on a pivot shaft (Figure 1). Depressing the spacebar causes the pivot shaft to rotate and in turn rotates the spacebar keylever. As the spacebar is depressed, a lower lug of the keylever pawl contacts the operational interposer.

When the operational interposer is released, it releases the spacebar/backspace cam and positions the spacebar latch under the rear of the cam follower. The theory of operation for the total operational control mechanism is covered in that section of this manual.

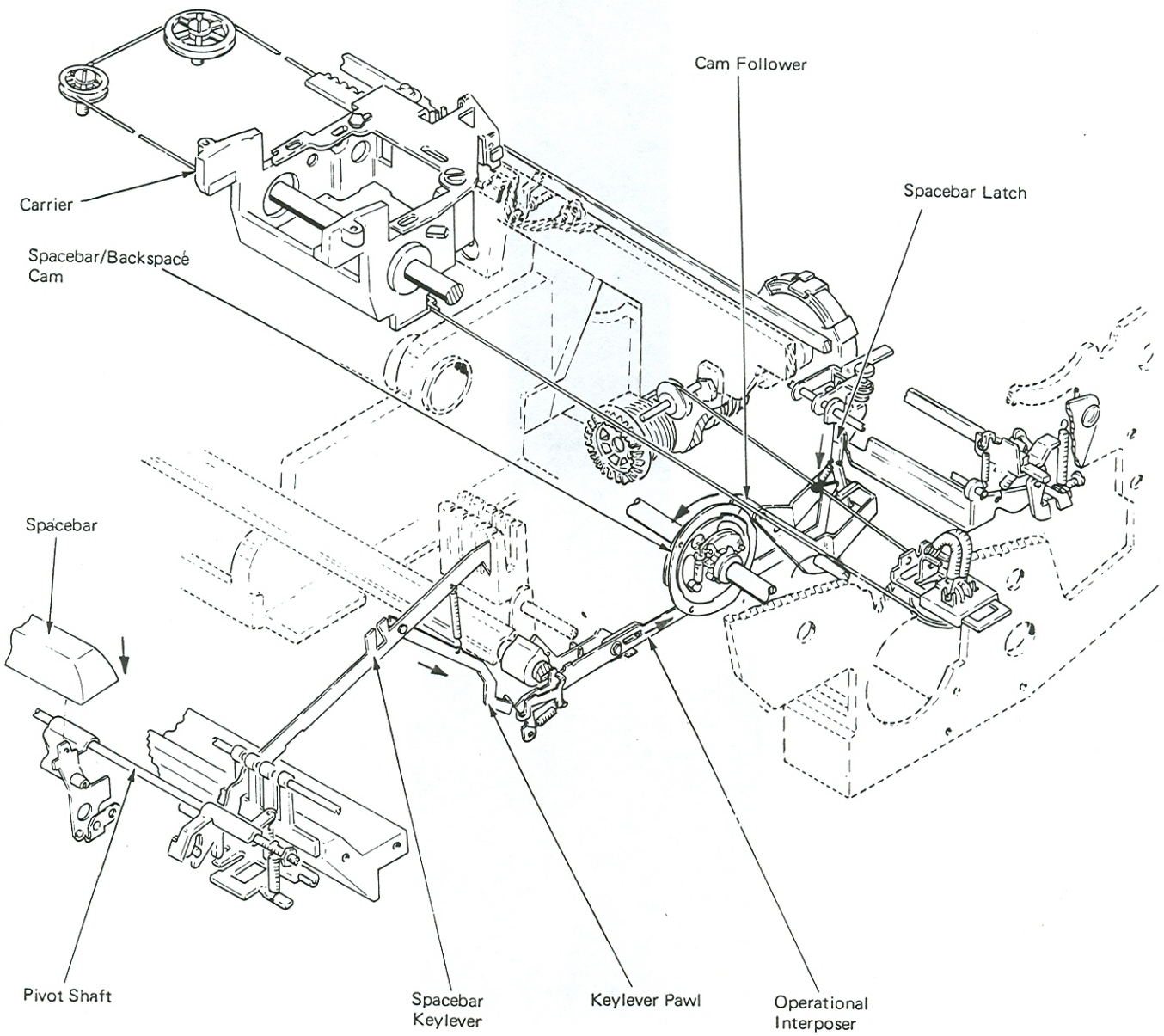

Figure 1 – Spacebar Mechanism

SPACEBAR OPERATION

Movement of the cam follower pulls the spacebar latch down, which causes the spacebar latch lever to pivot (Figure 2). An adjusting screw on the latch lever contacts the trigger lever, causing the trigger lever to rotate about the pivot pin. This causes the trigger on the trigger lever to rotate the escapement torque bar and allow the carrier to complete an escapement operation in the same way as a character print escapement.

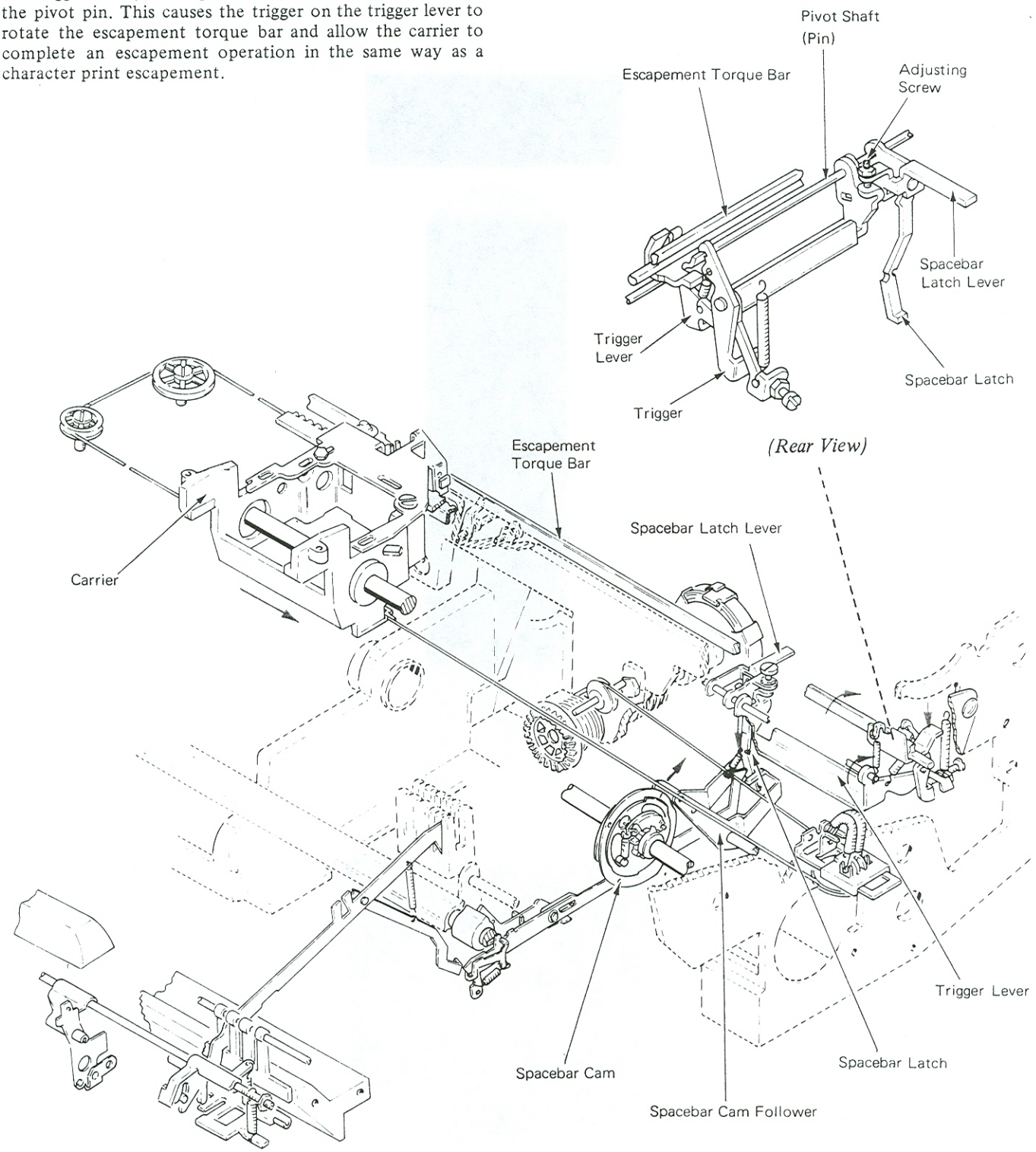

Figure 2 – Spacebar Operation

PRINT-TO-SPACE INTERLOCK

Both spacebar escapement and print escapement operate by actuating the escapement trigger lever to cause an escapement operation. Because of the relationship of these two mechanisms, operating both of them quickly or together causes only one space of escapement to occur. This could happen when an operator strikes the spacebar too soon after a character print operation.

To ensure the spacebar will cause an escapement operation following a print cycle, it is necessary to place the spacebar mechanism into storage until the print cycle is completed (Figure 3).

Spacebar storage is done by blocking the movement of the spacebar interposer to the rear. As the filter shaft rotates during a print operation, the interlock interposer follows the side of the spacebar interlock cam and pivots top to the front. As the interlock interposer drops off of the high point of the cam, the rear extension moves up and blocks the movement of the spacebar interposer to the rear. This stops the spacebar operation and holds the interposer in storage until the print cycle is completed.

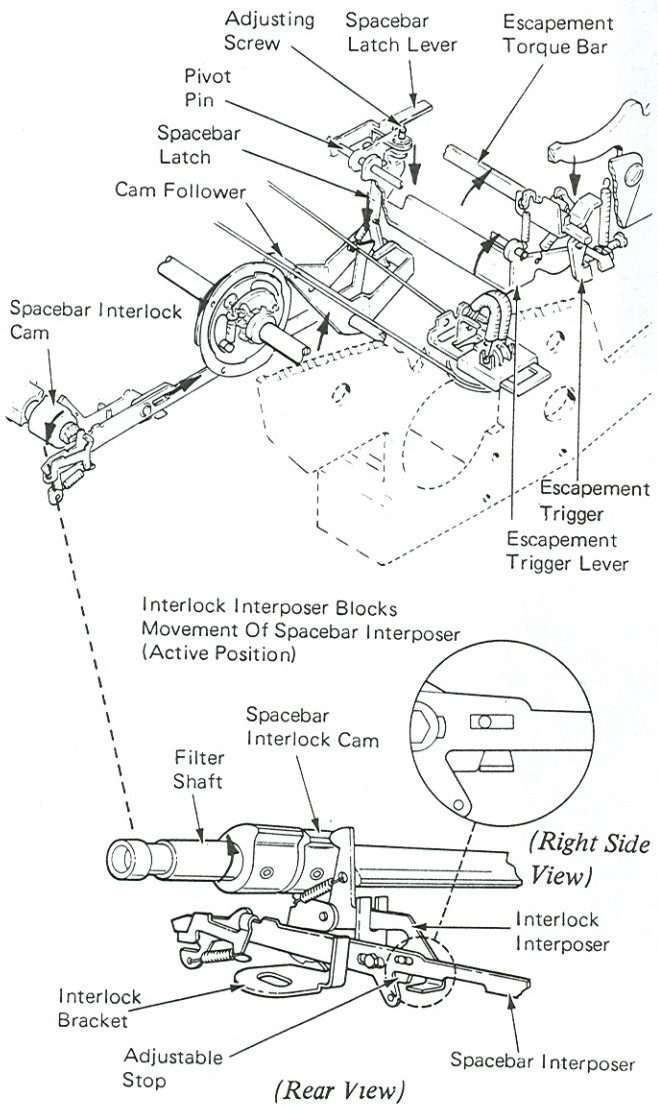

Figure 3 – Spacebar Operation & Print-To-Space Interlock

On level 1 machines, spacebar storage is done differently (Figure 4). A lockout cam is spring loaded toward the right against the escapement cam. In the rest position, the lockout cam is held to the left by the lateral working surfaces of the two cams. In this position, the spacebar interposer is free to operate without interference.

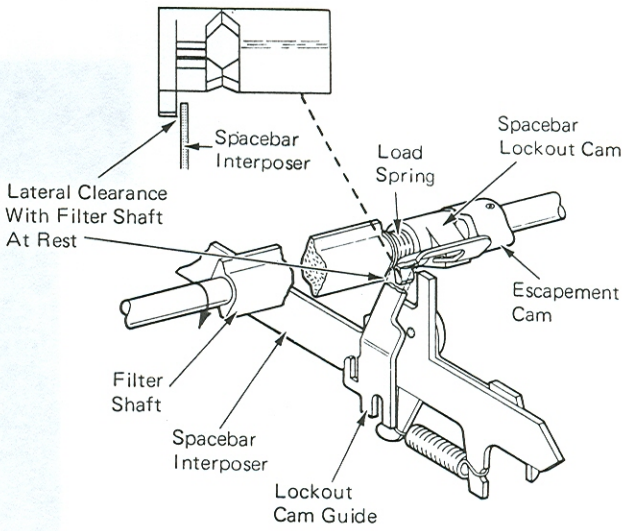

Figure 4 – Spacebar Interlock (Level 1 – At Rest)

During a character cycle, rotation of the filter shaft allows the lockout cam to move toward the right because the high points of the lateral working surfaces are no longer in contact (Figure 5). The lockout cam is prevented from rotating with the filter shaft by a guide bracket that fits in a slot in the front of the cam. As the lockout cam slides to the right, an extension at the bottom of the cam moves into the path of a lug on the spacebar interposer. As the filter shaft reaches its rest position, the lockout cam is forced back to the left by the escapement cam. The spacebar interposer is then released and normal spacebar operations can occur.

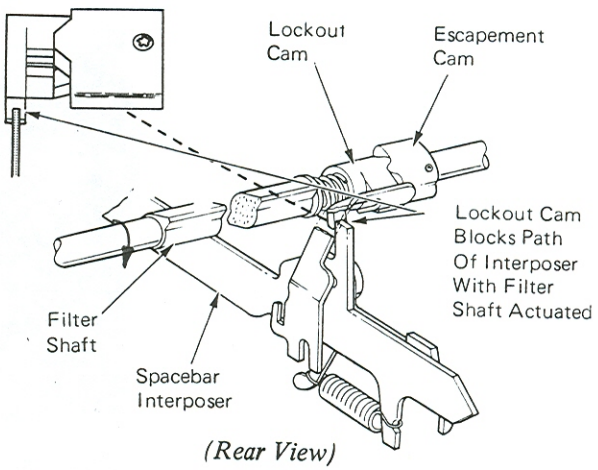

Figure 5 – Spacebar Interlock (Level 1 – Lockout Actuated)

The interlocks described above are called print-to-space interlocks. This is because the print cycles come before the spacebar cycles. This type of interlock is necessary in case the operator hits a spacebar cycle too soon after a character print cycle.

SPACEBAR ADJUSTMENTS

NOTE: All operational control adjustments must be correct before making any spacebar adjustments.

1. *Operational Latch Height (NRB/S)* – Adjust the latch adjusting screw so the spacebar latch will pass under the cam follower with a clearance of .001"-.005" (0.03-0.13 mm).

   This clearance can be observed by pulling the latch to the rear with a springhook while the machine is at rest.

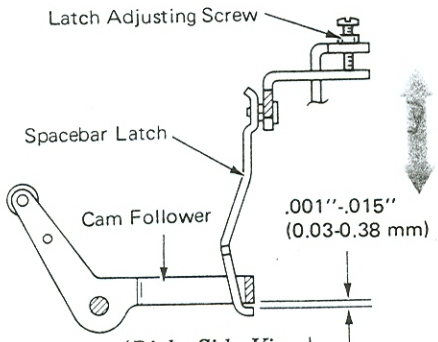

(Right Side View)

NOTE: Recheck interposer adjusting screws adjustment – Operational Control Adjustment Section.

2. *Spacebar Latch Lever Screw (NRB/S)* – Adjust the screw so that .007"-.010" (0.18-0.25 mm) clearance exists between the escapement trigger and the escapement torque bar. Disconnect the escapement trip link before making this adjustment. The trigger upstop should be moved up out of the way when making this adjustment. After completing the adjustment, the upstop should be readjusted so it clears the trigger lever by .001"-.005" (0.03-0.13 mm) and is centered between the trigger restoring spring and the trigger mounting lug.

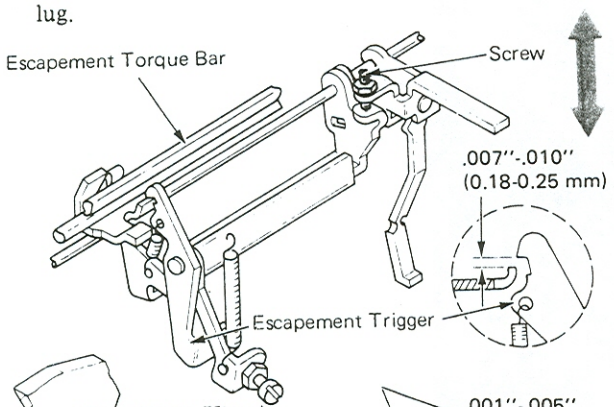

(Rear View)

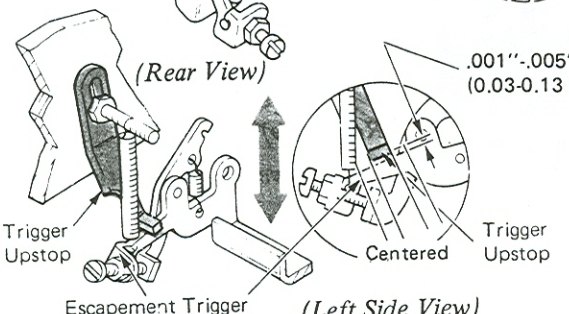

(Left Side View)

(Rear View)

3. *Spacebar Link (RB/S)* – With the escapement trip link properly adjusted, adjust the spacebar link for .001"-.012" (0.03-0.30 mm) between the clevis pin and the bottom of the slot in the trigger lever.

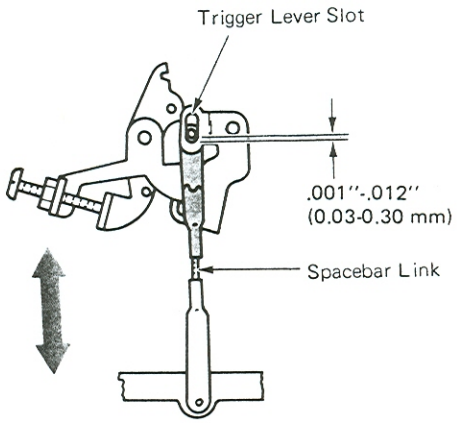

(Left Side View)

4. *Spacebar Guide* – Form the spacebar guide front-to-rear for free up and down motion of the spacebar keybutton and for 1/16"-1/32" (1.59-0.79 mm) between the rear edge of the spacebar keybutton and the front edge of the fourth row character keybuttons.

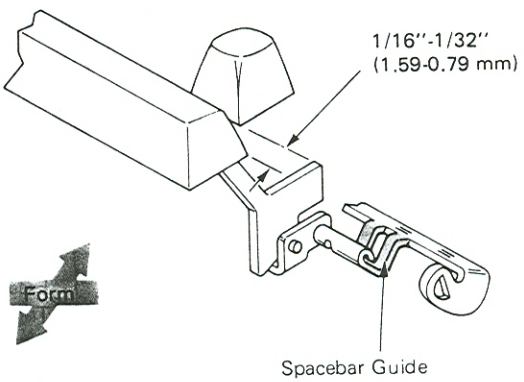

Form the spacebar guide up or down to get .005"-.010" (0.13-0.25 mm) clearance between the pivot shaft on the guide and the spacebar stem at the time the spacebar keylever is bottomed.

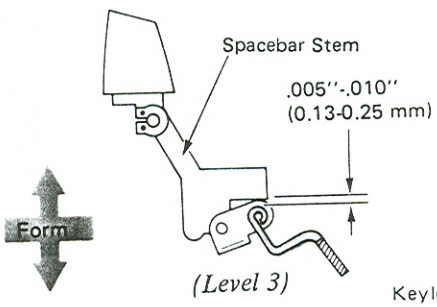

(Right Side View)

Spacebar Guide (Levels 1 And 2) – Adjust the spacebar guide for free motion.

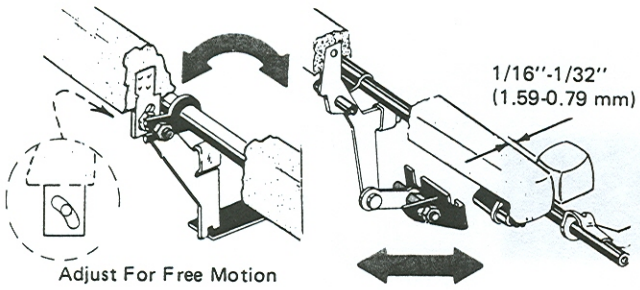

(Level 1) *(Level 2)*

5. *Spacebar Return Spring* –

Level 1 – The spring should be formed up or down so that a weight of 2-1/2 ounces (70.9 g) will just fail to release the spacebar interposer. The medium screwdriver, which weighs 2-1/2 ounces (70.9 g), can be used for this check.

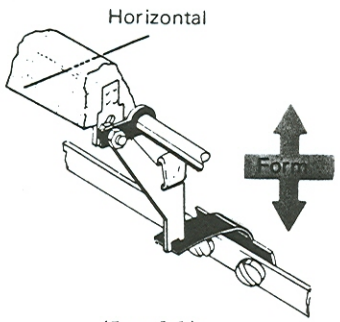

(Level 1)

Level 2 – Position the spring on one of the three lugs on the carrier return/backspace repeat bail so that the spacebar can be released by a 3 ounce (85.1 g) load.

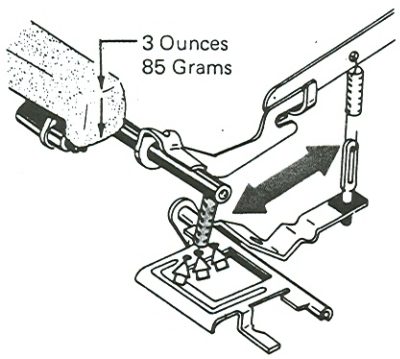

(Level 2)

6. *Spacebar Operating Arm (Level 1)* – Form the spacebar operating arm to satisfy the following conditions:

a. Left to right so the operating arm overlaps the keylever by 0.30" (0.76 mm) minimum.

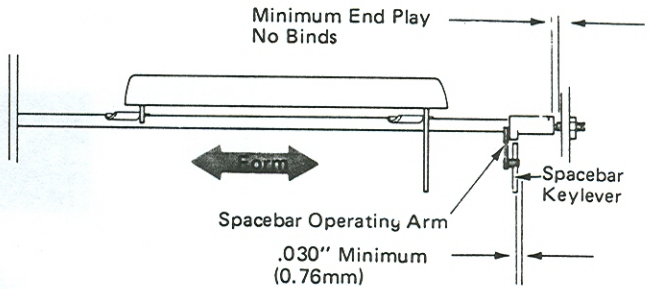

b. Up and down to provide clearance between the keylever and operating arm at rest.

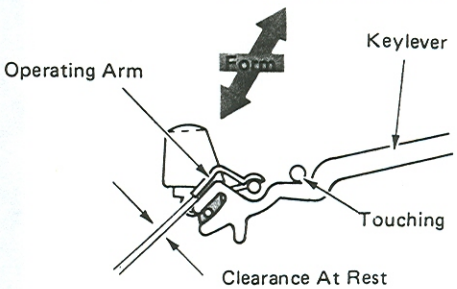

c. Up and down to cause the keylever to bottom in the guide comb when the keybutton is fully depressed.

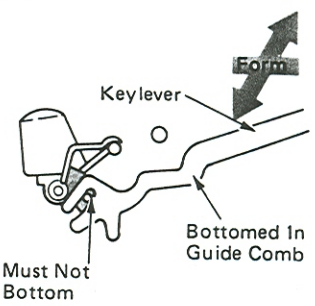

(Level 1)

7. *Spacebar Repeat Stop* – The additional load of the repeat stop should be applied to the spacebar just after a single operation occurs. Adjust in the following way:

Level 1 – Adjust the repeat stop rotationally for a clearance of .001"-.005" (0.03-0.13 mm) between the arm on the spacebar shaft and the repeat arm when a single operation occurs.

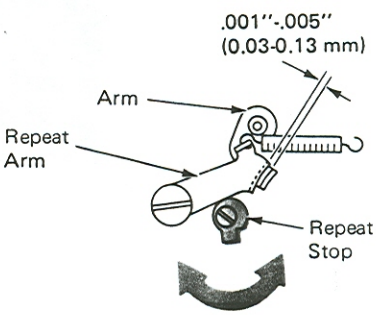

(Level 1 – Left Side View)

Level 2 – Adjust the repeat stop screw for a clearance of .001"-.005" (0.03-0.13 mm) between the repeat stop screw and the repeat spring when a single operation just occurs.

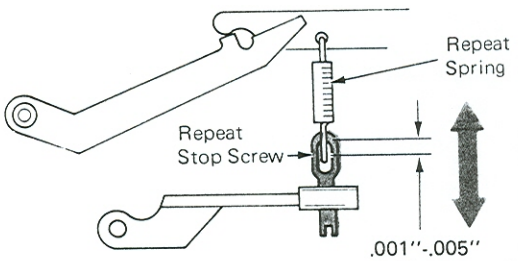

(Right Side View)

Level 3 – Form the right lug so the carrier return and backspace keylevers contact the stop just after a single operation occurs. Form the spacebar lug so the spacebar keylever contacts the stop just after a single operation occurs.

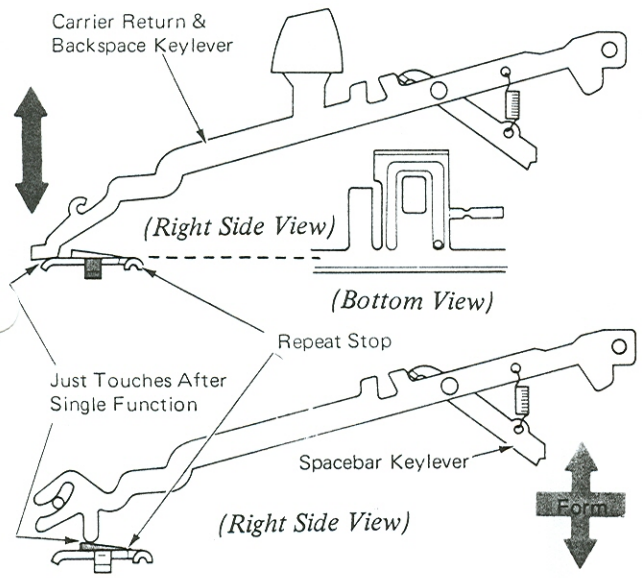

8. *Spacebar Final Stop* – Adjust the spacebar final stop to get .005"-.010" (0.13-0.25 mm) clearance between the stop and the spacebar stem at the time a repeat operation occurs.

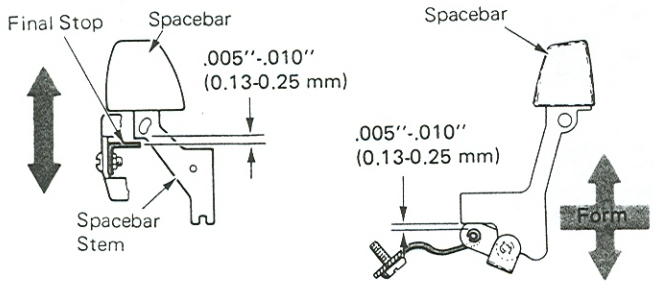

(Level 1 – Right Side View) *(Level 2 – Left Side View)*

9. *Spacebar Interlock Cam* – Adjust the spacebar interlock cam rotationally on the filter shaft so that when the machine is at rest, the spacebar interlock interposer is on the high point of the cam.

NOTE: W.T. – For 9XX this adjustment is made by adjusting the escapement timing.

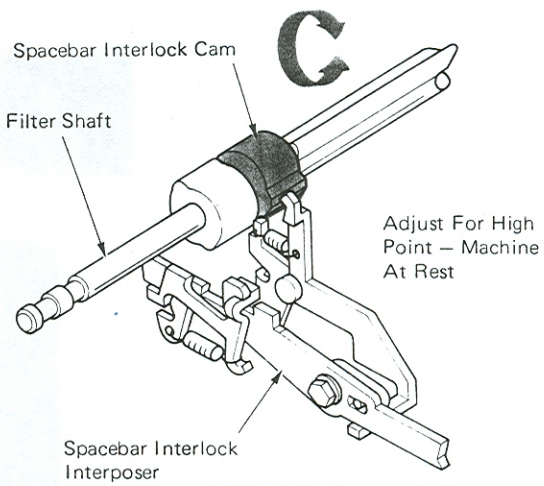

(Rear View)

10. *Lockout Cam (Level 1)* – With the lockout cam on the high point of the escapement cam, adjust the escapement cam laterally so the lockout cam will have .050"-.060" (1.27-1.52 mm) remaining movement toward the left.

NOTE: Be sure to maintain the proper rotational adjustment of the escapement cam.

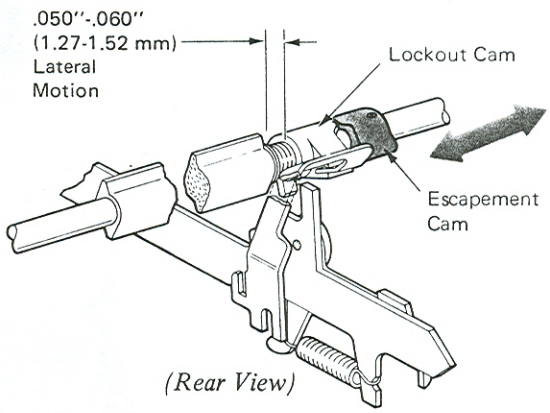

(Rear View)

11. *Lock Cam Guide (Level 1)* – With a character half cycled, adjust the lockout cam guide up or down so the spacebar interposer will move to the rear .015"-.025" (0.38-0.64 mm) when it is unlatched.

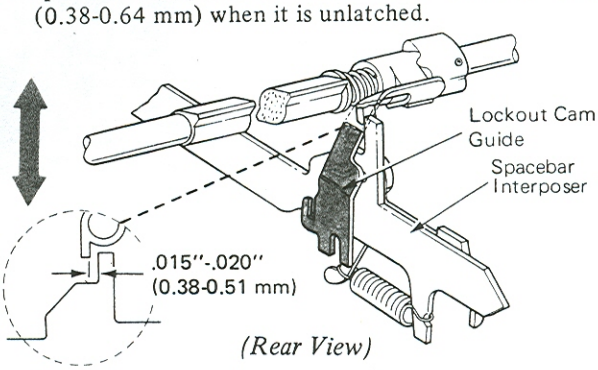

(Rear View)

12. *Spacebar Interposer Guide (Level 1)* – With the filter shaft at rest and the spacebar interposer released, adjust the interposer guide left or right to get .015"-.025" (0.38-0.64 mm) clearance between the interposer and the lockout cam lug.

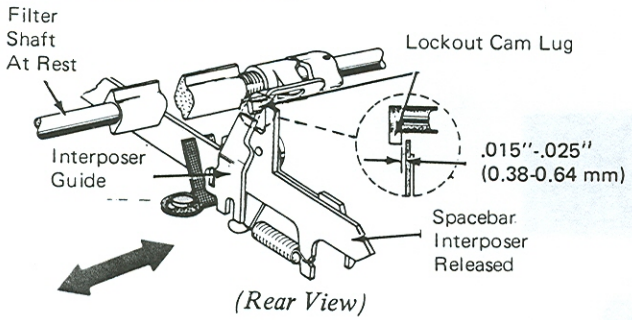

(Rear View)

13. *Spacebar Interlock Bracket* – With the machine at rest and the spacebar interposer released, adjust the interlock bracket front-to-rear to get a clearance of .040"-.050" (1.02-1.27 mm) between the interlock interposer and the adjustable stop on the spacebar interposer.

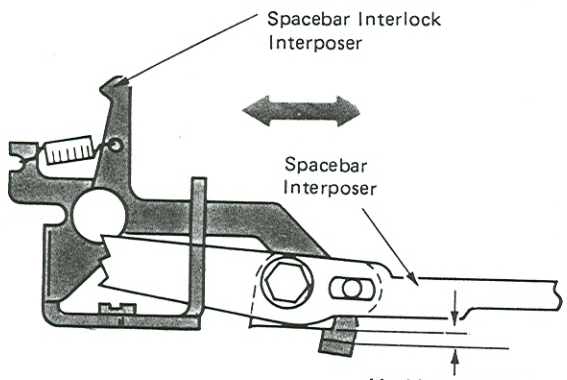

(Level 2)

14. *Interlock Stop* – With the machine half cycled and the spacebar interposer latched at rest, adjust the spacebar interposer interlock stop so there is .020"-.025" (0.51-0.64 mm) between the interlock stop and the spacebar interlock interposer.

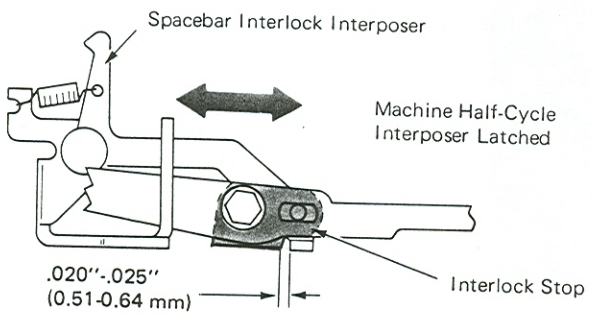

(Right Side View)

15. *Space-To-Print Interlock* – This adjustment only applies to machines equipped with a field installed space-to-print interlock.

a. With the machine tilted up, position the retaining clip so the space-to-print interlock extension is vertical.

b. Form the space-to-print interlock extension to clear the character interrupter bail by .001"-.010" (0.03-0.25 mm) with all parts at rest.

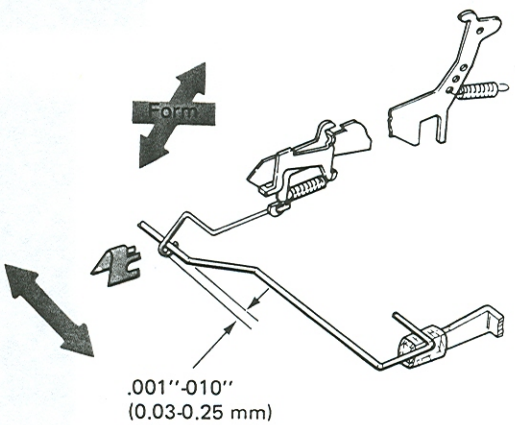

BLANK PAGE IN MANUAL FOR ADDING NOTES

CARRIER RETURN OPERATIONAL THEORY

The purpose of the carrier return mechanism is to return the carrier to the left margin (Figure 1). The index mechanism is activated during each carrier return operation to line space the paper. The carrier return and index operations leave the carrier in position for printing at the beginning of the next line.

NOTE: The index mechanism is discussed in the Paper Feed and Index section of this manual.

During a carrier return operation, several things occur: the escapement torque bar is rotated to remove the escapement and backspace pawls from their racks; the carrier return spring clutch is activated to drive the carrier to the left margin; and the carrier return mechanism is latched in the active condition to ensure the carrier is driven to the left margin. When the carrier reaches the left margin, the mechanism is unlatched.

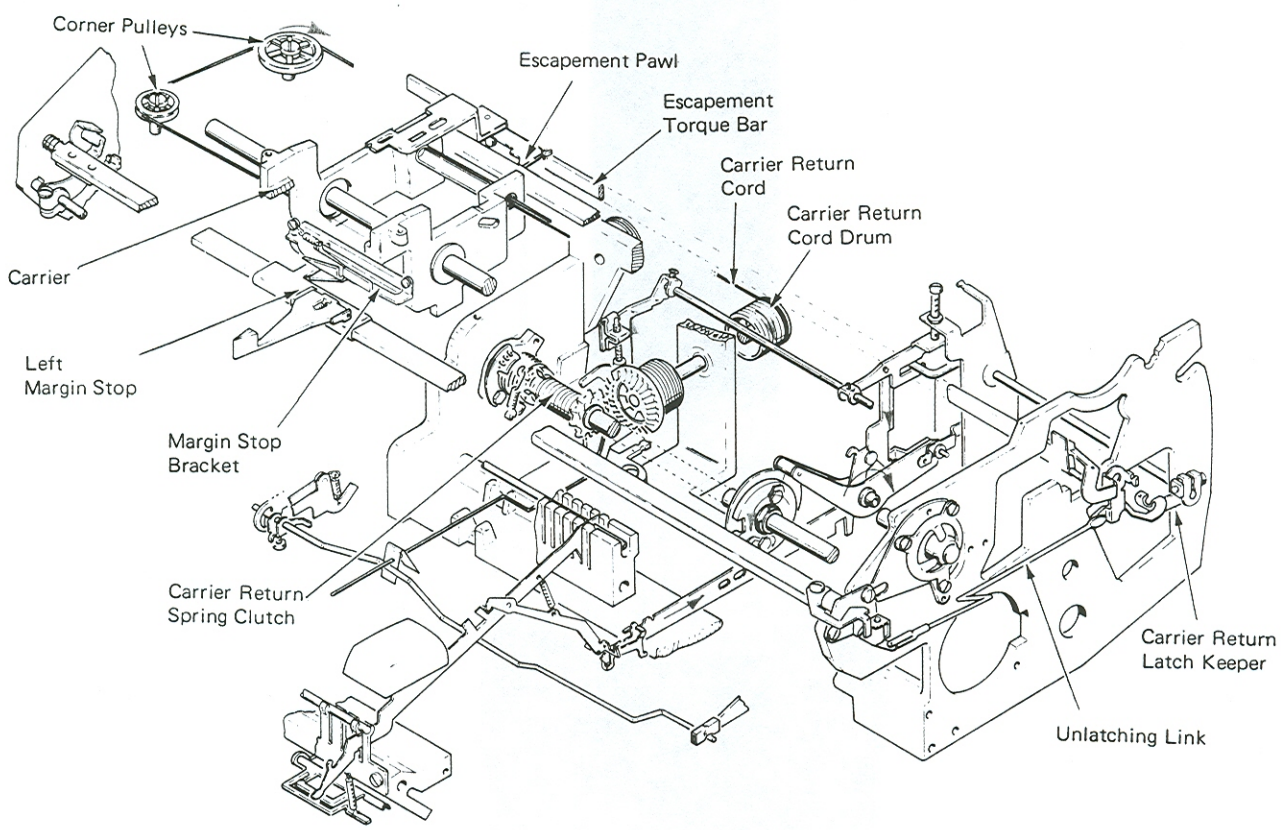

Figure 1 – Carrier Return Mechanism

CARRIER RETURN CLUTCH OPERATION

The power to turn the escapement shaft is taken directly from the operational shaft. The escapement cord drum has a gear on the front which engages a carrier return pinion gear on the operational shaft. A spring clutch is used to cause the carrier return pinion gear to rotate with the operational shaft. The pinion gear drives the escapement cord drum in a clockwise direction causing the carrier return cord to be wound on the drum (Figure 2).

The left-hand end of the carrier return pinion forms the arbor for the carrier return spring clutch. A second hub, the carrier return clutch arbor, is just to the left of the carrier return pinion. This hub is in constant rotation with the operational shaft and the carrier return clutch spring is attached to this hub by a spring clip. The operational shaft turns in the tightening direction of the spring; however, no drive occurs because the pinion hub is smaller than the inside diameter of the spring clutch. When the loose end of the carrier return clutch spring is pressed against the pinion hub, the spring clutch will tighten around the hub and drive the pinion. The tension of the spring clutch will return the clutch to the normal size when the external pressure is released.

The external pressure required to cause the carrier return spring clutch to drive is applied by a nylon shoe. The power to operate the nylon shoe against the clutch spring is taken from the carrier return operational cam. This cam has one cam surface and rotates 360 degrees during each operation.

CARRIER RETURN LATCHING

When the carrier return operational latch is pulled down by the cam follower, the latch pulls the carrier return lever down. As the carrier return lever moves down, it pivots the clutch latch shaft. Attached to the right-hand end of the clutch latch shaft is the carrier return clutch latch. As the carrier return clutch latch moves downward, it rotates the latch actuating arm which will pivot the escapement pawl from the escapement rack. The clutch latch and latch actuating arm are latched in their operational position (Figure 2).

The left-hand operational pivot pin is attached by setscrews to the carrier return lever and pivots about the mounting hole as the carrier return lever moves downward. Located on the left end of the left-hand operational pivot pin is the carrier return clutch arm. As the carrier return clutch arm moves upward, the carrier return shoe actuating arm pivots and forces the carrier return shoe into the spring clutch. The carrier return clutch latch causes the carrier return mechanism to be latched in this active position until the carrier reaches the left-hand margin. At that time, the clutch is unlatched and the escapement pawl is allowed to restore into the rack (Figure 2).

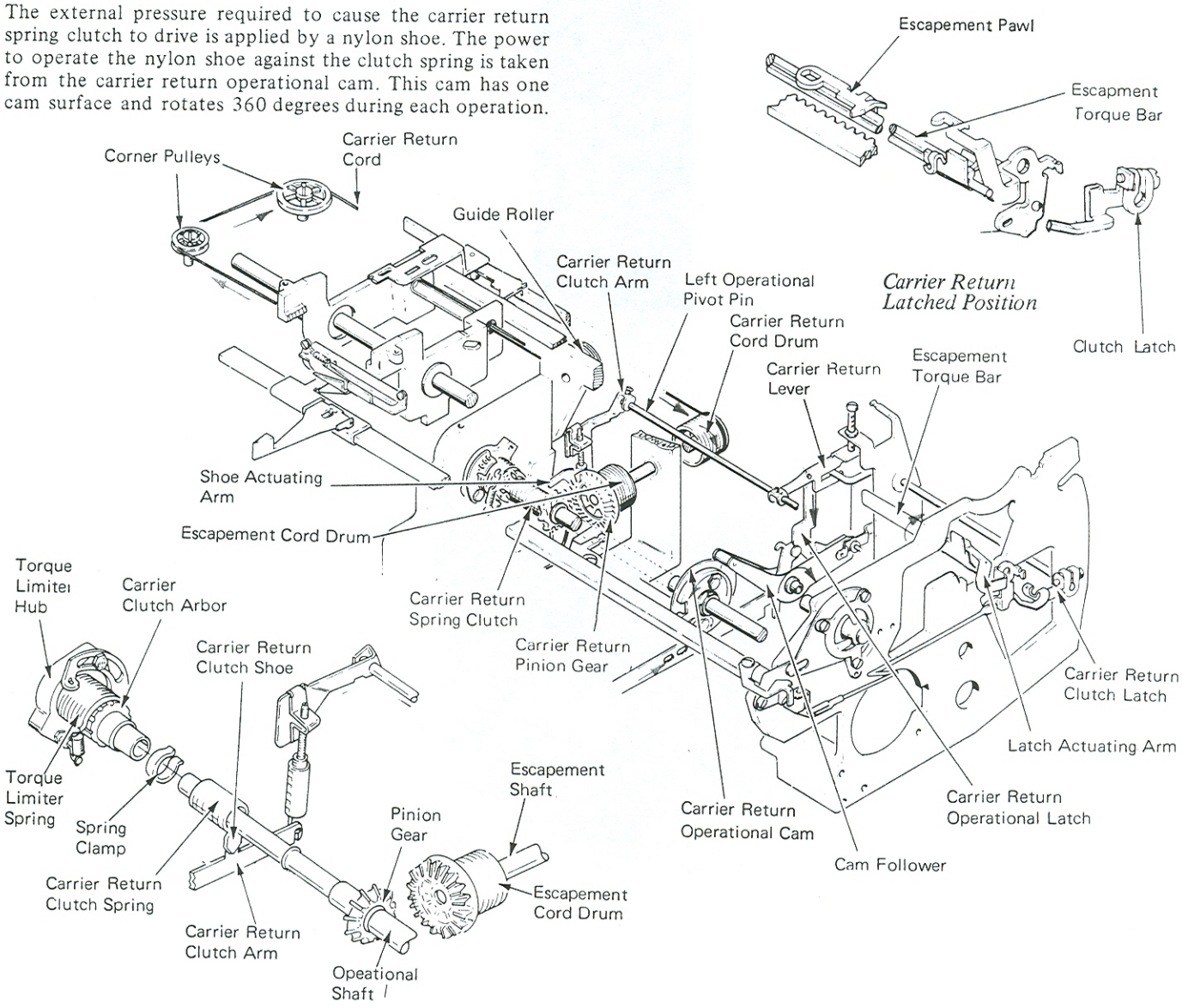

Figure 2 – Carrier Return Clutch Operation

CARRIER RETURN UNLATCHING

When the carrier reaches the left margin, the carrier return clutch must be unlatched and the pawl returned to its rack, ready for the next operation. This is done through the linelock bracket which transfers motion from the carrier through the margin rack to unlatch the carrier return arm assembly (Figure 3).

When the carrier is away from the left margin, a compression spring, located at the left end of the margin rack, loads the rack to the right. As the carrier is returned to the left margin, the linelock bracket strikes the left margin stop, forcing the margin rack to the left. Motion is then transferred through the overbank guide, a bellcrank, and an unlatching link, to pull the latch keeper forward, unlatching the carrier return arm assembly. As the carrier return arm unlatches, the escapement torque bar will return to rest, allowing the pawl to return to its rack. The nylon shoe will also return to rest, disengaging the carrier return clutch.

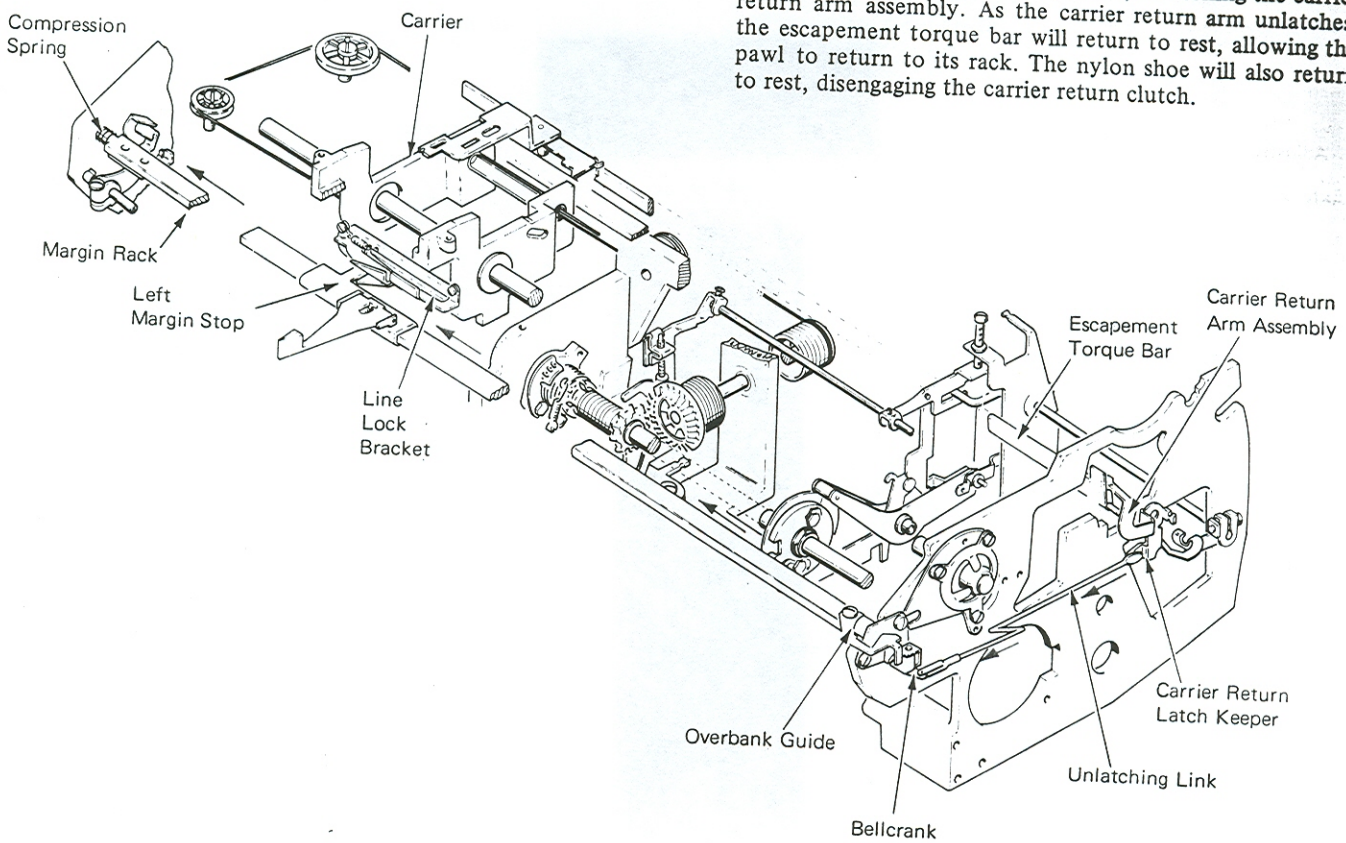

Figure 3 – Carrier Return Unlatching

TORQUE LIMITER

If the carrier is already resting at the left margin when a carrier return operation is selected, the carrier return mechanism must be allowed to slip in order to prevent parts breakage.

To do this, rotational motion of the operational shaft is supplied to the carrier return clutch arbor through a torque limiter (Figure 4). The torque limiter is a spring clutch which gives a controlled amount of torque to the carrier return clutch arbor.

The torque limiter consists of the torque limiter hub, which is attached to the operational shaft, and the torque limiter spring. The left end of the torque limiter spring is attached to the torque limiter hub by an adjustable clamp. The right half of the torque limiter spring fits over the large shoulder of the carrier return clutch arbor.

The operational shaft turns in the unwinding direction of the torque limiter spring. This expands the spring and allows it to slip. The spring is heavy, and smaller in diameter than the carrier return clutch arbor over which it fits. The friction between the arbor and the spring is not enough to drive the arbor in the unwinding direction of the spring during carrier return. The right end of the torque limiter spring has a loop formed to accept an extension spring.

The extension spring is connected between this loop and an eccentric stud on the torque limiter hub (Level 1). The extension spring increases the force required to unwind the torque limiter spring so that no slipping occurs during normal carrier return. The torque limiter spring slips when the carrier cannot move to the left. It also slips at the beginning of a carrier return operation to provide an even start.

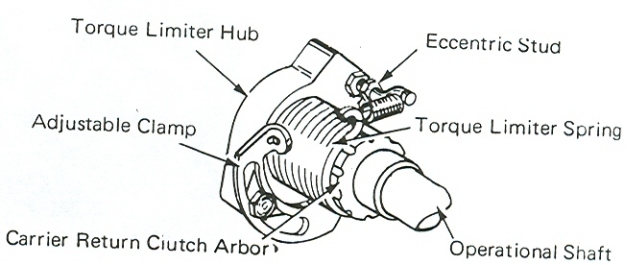

Figure 4 – Torque Limiter (Level 1)

The torque limiter extension spring on Level 2 machines is connected between the loop on the torque limiter spring and the extension lug on the torque limiter adjustable clamp (Figure 5).

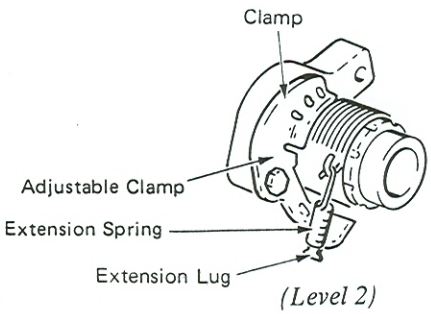

(Level 2)

Figure 5 – Torque Limiter

CARRIER RETURN/PRINT INTERLOCK

The carrier return/print interlock is used to prevent the cycle clutch from releasing any time the carrier return mechanism is operated. A link is connected between the carrier return actuating arm and the character interrupter shaft. When the actuating arm is in the operated position, the character interrupter shaft is rotated to position the character interrupter pawl in the path of the cycle clutch link. This prevents the cycle clutch from releasing (Figure 6).

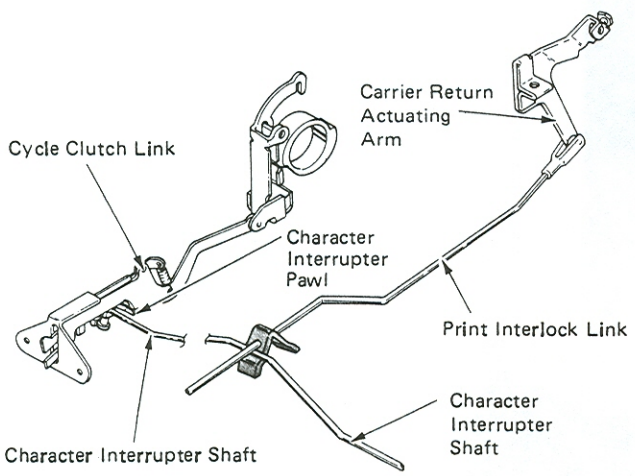

Figure 6 – Carrier Return/Print Interlock

CARRIER RETURN ADJUSTMENTS

NOTE: All operational control adjustments must be correct before making carrier return adjustments.

1. *Carrier Return Latch Actuating Arm* – Form the lug on the carrier return latch actuating arm so the vertical lug clears the lug on the escapement torque bar by .001"-.005" (0.03-0.13 mm) at rest.

   Level 1 machines can be identified by a clutch latch eccentric in the carrier return clutch latch. Level 3 machines can be identified by a 90-degree bend in the left-hand end of the clutch latch shaft. Other machines are level 2.

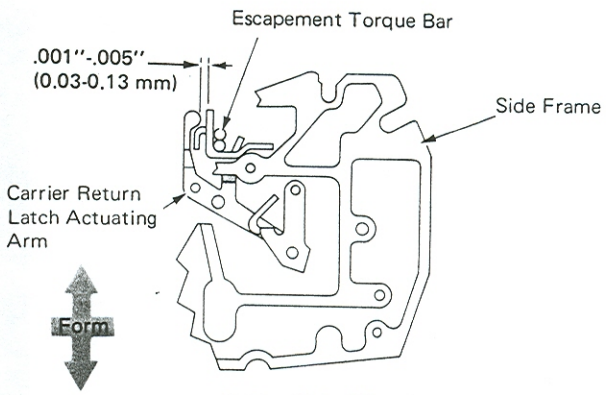

(Right Side View)

2. *Pawl Clearance* –

   a. *Level 1* – Adjust the clutch latch eccentric so the escapement pawl will clear the rack teeth by .005"-.015" (0.13-0.38 mm)when the latch is being held down by the keeper.

   CAUTION: Do not form the tip of the carrier return clutch latch.

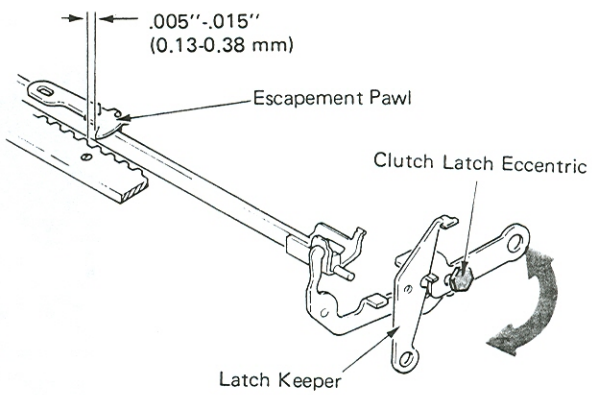

(Level 1)

b. *Level 2 And 3* – Form the tip of the carrier return clutch latch to get .005"-.015" (0.13-0.38 mm) between the escapement pawl and the escapement rack during a carrier return. This will allow the pawl to enter the rack quickly at the completion of a carrier return operation.

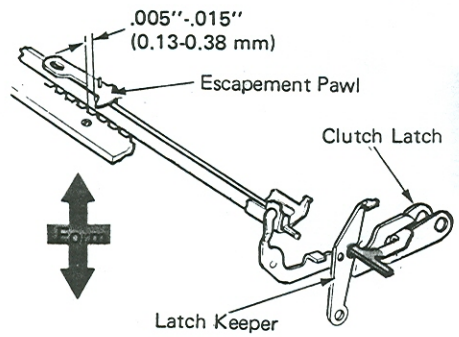

(Level 2 & 3)

c. *Level 4* – With the carrier return latched, form the clutch latch for .010"-.020" (0.25-0.51 mm) escapement pawl clearance. Ensure that the torque bar latch is under the lug on the carrier return clutch latch.

NOTE: "Selectric" II NRB/S only.

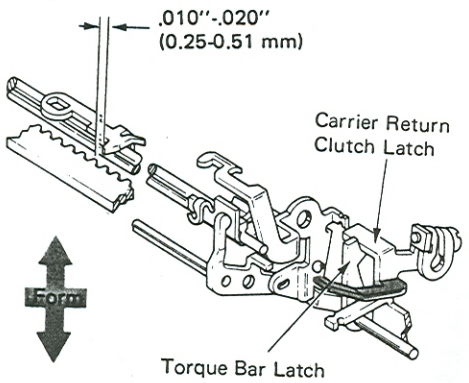

(Level 4)

3. *Carrier Return Latch Height* – Adjust the carrier return latch adjusting screw to get .001"-.015" (0.03-0.38 mm) clearance between the latch and the cam follower lever. The clearance should be kept to the low side to ensure a minimum of lost motion.

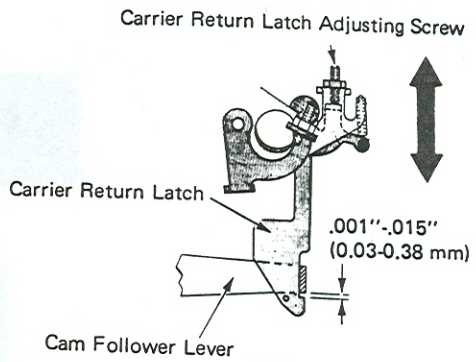

7X1

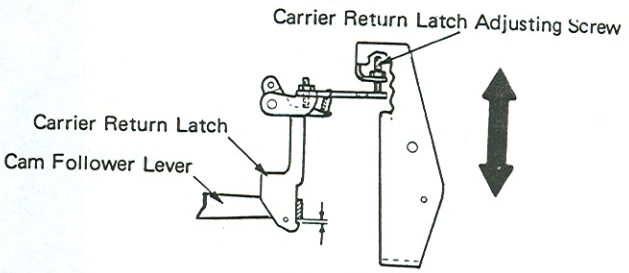

7X3–7X5

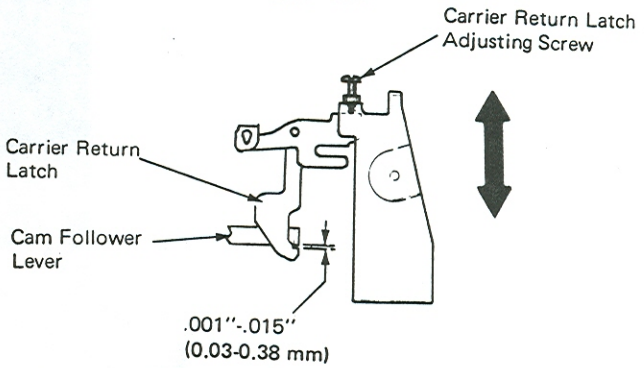

8X3–8X5

(Right Side View)

4. *Clutch Latch Overthrow – Levels 1 And 2* – Adjust the adjusting screw in the carrier return latch arm to get .030"-.040" (0.76-1.02 mm) overthrow between the tip of the carrier return clutch latch and the clutch latch keeper with the carrier return/index cam on the high point.

Be sure the setscrew that locks the carrier return lever to the pivot shaft is tight, or there will not be enough carrier return latch overthrow.

NOTE: This adjustment should be made with the platen, deflector and feed rolls in the machine. After making this adjustment, be sure to recheck the carrier return latch height adjustment. This can be found in the Operational Control and Spacebar Section.

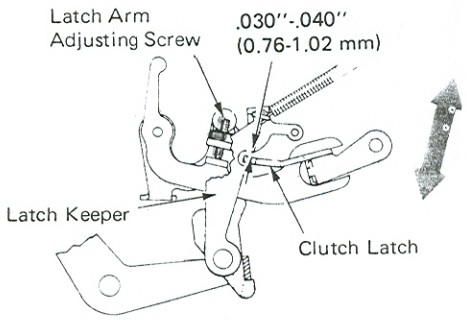

Model 7X1

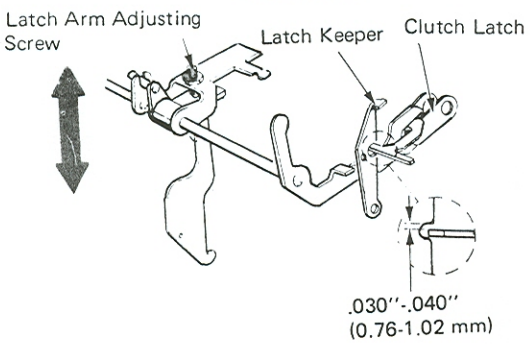

Model 7X3–7X5

Level 3 – Rotate the clutch latch on the clutch latch actuating shaft to get .030"-.040" (0.76-1.02 mm) clearance between the carrier return clutch latch and clutch latch keeper. This adjustment should be made with the carrier return/index cam on the high point and the platen, deflector and feed rolls in the machine.

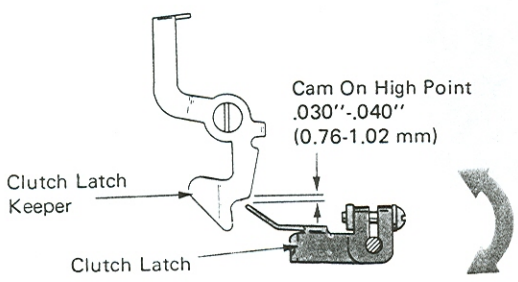

(Right Side View)

Level 4 – Rotate the clutch latch on the clutch latch actuating shaft to get .025"-.035" (0.64-0.89 mm) clearance between the carrier return clutch latch and clutch latch keeper. This adjustment should be made with the carrier return/index cam on the high point and the platen, deflector and feed rolls in the machine (NRB/S "Selectric" II only).

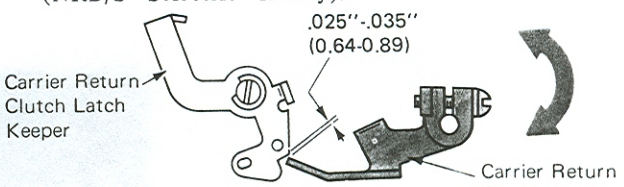

(Right Side View)

5. *Carrier Return Shoe Overlap* –

Level 1 – Adjust the carrier return actuating arm bracket left or right so the carrier return shoe overlaps the last three coils on the right-hand end of the carrier return clutch spring, and there is equal shoe to pinion spring contact on all three coils. This ensures that all coils of the clutch latch spring will be used in the clutch operation.

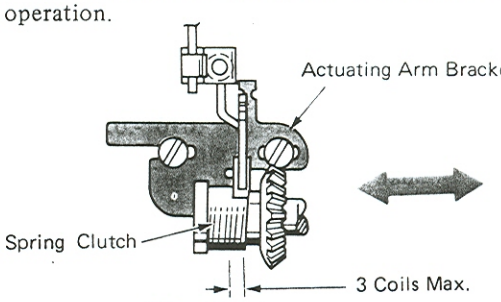

(Top View)

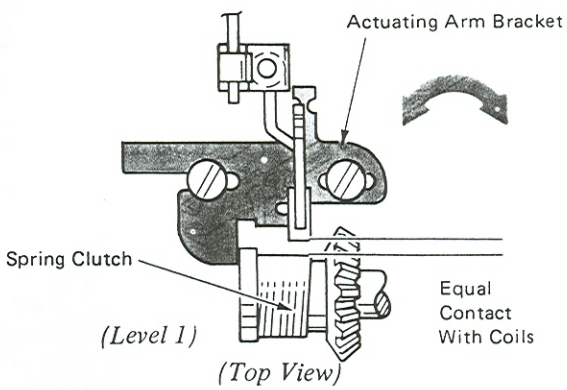

(Level 1)

(Top View)

Level 2 – Form the one-piece carrier return shoe arm left or right so that the return shoe overlaps no more than the last three coils on the right-hand end of the carrier return clutch spring, and there is equal shoe to pinion spring contact on all three coils.

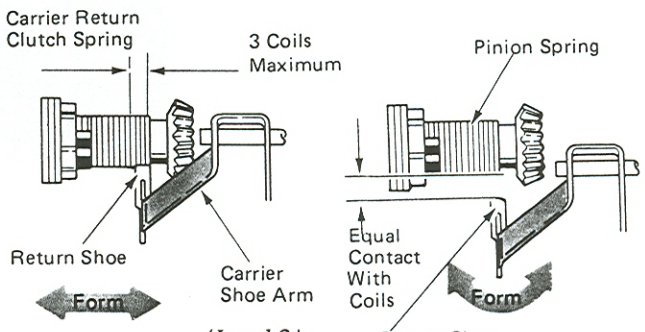

(Level 2)

6. *Carrier Return Shoe Clearance – Levels 1, 2 And 3 –* Adjust the actuating arm spring screw vertically to get .015"-.020" (0.38-0.51 mm) clearance between the carrier return shoe and the carrier return clutch spring with all parts at rest.

NOTE: An easy way to get the clearance on Level 3 machines is to turn the arm actuating down 1 to 1-1/2 turns from engagement of shoe.

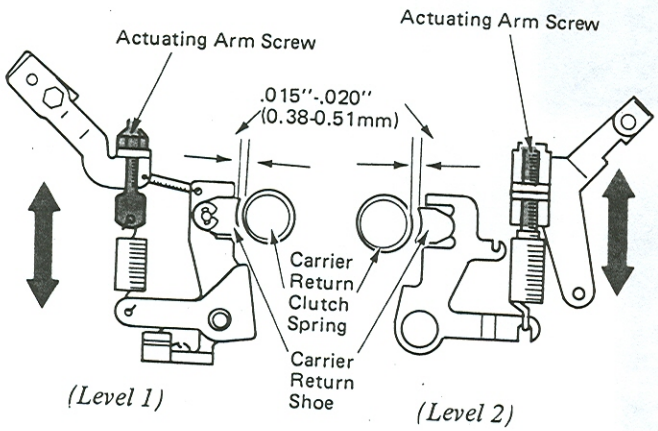

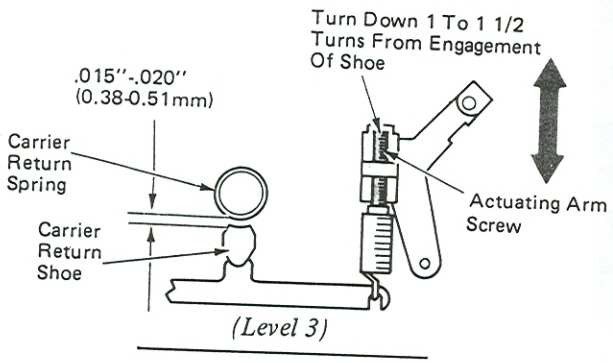

7. *Overbank – Level 1 –* With the carrier at the left-hand margin, adjust the margin rack eccentric to get .001"-.005" (0.03-0.13 mm) clearance between the left-hand margin stop and the carrier stop latch. Next, adjust the bushing at the left-hand end of the margin rack to get .025"-.030" (0.64-0.76 mm) between the bushing and the nylon washer.

NOTE: Any change in overbank on machines with this old-style margin rack assembly will directly affect the clutch unlatching adjustment.

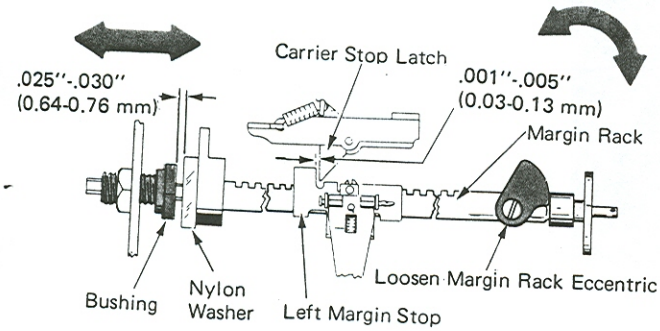

Level 2 – With the carrier resting at the left-hand margin, adjust the overbank guide left-to-right to get .001"-.005" (0.03-0.13 mm) clearance between the left-hand margin stop and the carrier stop latch. The floating action of the stop latch must be removed by pulling the latch to the right with a springhook before this clearance can be observed.

NOTE: The play between the margin rack and rail on RB/S machines must be removed while making this adjustment. This is done by holding the margin rail to the right and the rack to the left.

The adjustment of the overbank guide on the margin rack determines the rest position of the margin rack. This adjustment ensures that the left-hand margin stop will set correctly when the stop is moved to the right against the carrier. The adjustment of the overbank guide, plus the amount of side motion that the guide allows, automatically provides the carrier with the overbank required for proper escapement pawl entry at the completion of a carrier return operation.

NOTE: Dual pitch machines must be checked in 12 pitch.

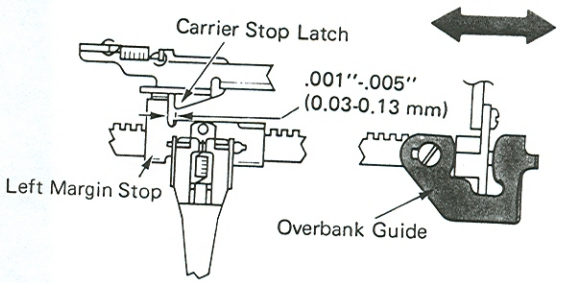

8. *Clutch Unlatching –* Adjust the clevis on the carrier return unlatching link so the clutch latch keeper clears the tip of the clutch latch by .005"-.015" (0.13-0.38 mm) on NRB/S and .001"-.010" (0.03-0.25 mm) on RB/S machines at the unlatching point. To observe this adjustment, turn the power on and hold the clutch latch down.

NOTE: On machines equipped with the early style margin rack, check the margin rack eccentric adjustment if the clutch fails to latch properly. The eccentric may be holding the rack too far to the left, limiting the margin rack motion and reducing the amount of overlap of the keeper on the latch.

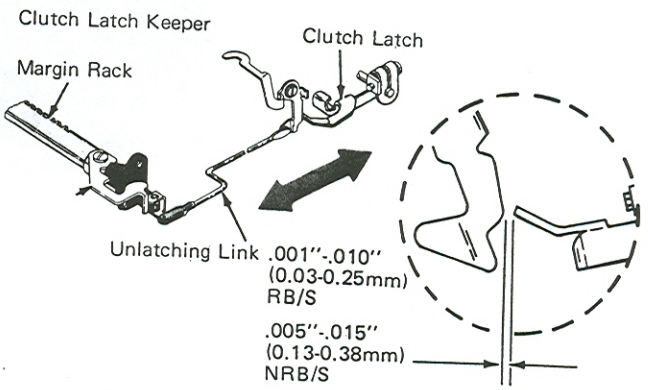

Level 4 – With the margin rack held to the left, adjust the clutch unlatching link for .005"-.015" (0.13-0.38 mm) between the carrier return clutch latch and the torque bar latch.

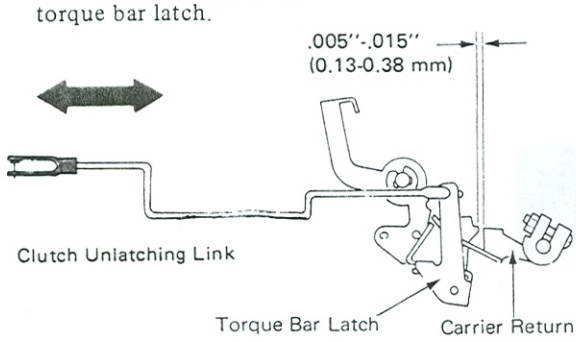

(Right Siae View)

9. *Torque Bar Latch – Level 4 Only* – Form the lug on the torque bar latch so the carrier return clutch latch will overlap the carrier return clutch latch keeper by .020"-.025" (0.51-0.64 mm) when the carrier return is latched.

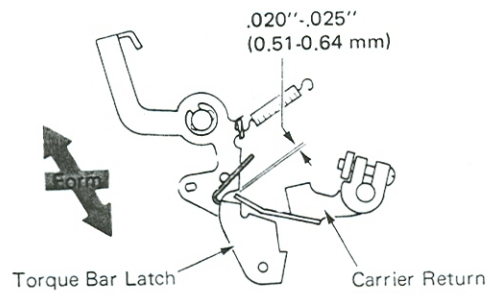

(Right Side View)

10. *Torque Limiter – Level 1* – Adjust the eccentric stud on the torque limiter hub to provide one to two pounds pull on the carrier as the carrier is unlatching the clutch at the left-hand margin. If enough adjustment is not available at the eccentric, the torque limiter spring may be shifted on the torque limiter hub by repositioning the torque limiter spring clamp.

If no spring scale is available, the torque may be estimated by holding the carrier while the clutch is engaged. The torque limiter should slip, but supply a positive carrier return when the carrier is released.

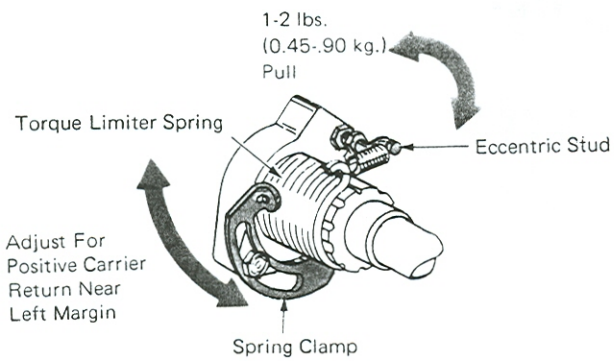

(Level 1)

Level 2 – Form the extension lug on the clamp to provide one to two pounds pull on the carrier as the carrier unlatches the clutch at the left margin.

NOTE: This should be adjusted for positive carrier return when carrier is near the left margin.

If more adjustment is needed, the clamp can be positioned into another notch.

CAUTION: The spring lug extension may hit the carrier return shoe arm or the print interlock link when in full overthrow position. Form the tip of the spring lug down over the loop of the spring.

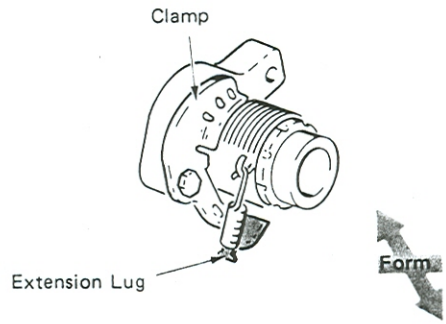

11. *Carrier Return Interlocks – Level 1* – Form the carrier return print interlock link to satisfy the following conditions. With the carrier return clutch latched, the character interrupter pawl should fully engage in front of the cycle clutch link. With the carrier return mechanism at rest, the interlock link must not prevent the character interrupter shaft from returning to rest.

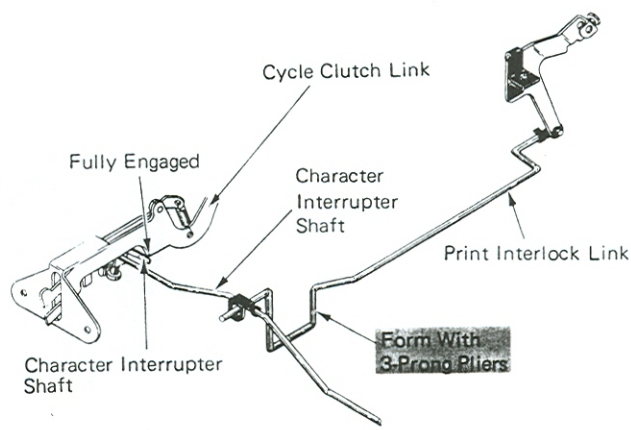

(Level 1)

Level 2 – Adjust the clip front-to-rear on the carrier return print interlock link to satisfy the following conditions: With the carrier return clutch unlatched, the character interrupter pawl should fully engage in front of the cycle clutch link; with the carrier return mechanism at rest, the interlock link must not prevent the character interrupter shaft from returning to rest.

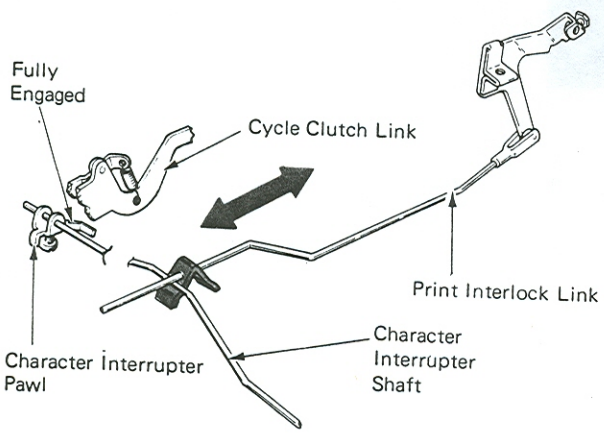

(Level 2)

BLANK PAGE IN MANUAL FOR ADDING NOTES

NONROTARY BACKSPACE OPERATIONAL THEORY (NRB/S)

The purpose of the backspace mechanism is to move the carrier to the left one space at a time. When the backspace mechanism is operated, cam motion is transferred through a cam follower, latch assembly, intermediate lever, backspace rack and backspace pawl to move the carrier to the left (Figure 1).

The complete operational theory of the operational control mechanism can be found in the operational control section of this manual.

BACKSPACE OPERATION

When the backspace cam is rotated, motion is transferred through the cam follower to operate the backspace latch.

As the backspace latch is pulled down by the cam follower, the latch assembly pivots around its mounting stud, rotating the intermediate backspace lever clockwise on its mounting stud. The front of the intermediate backspace lever moves the backspace rack to the left.

PAWL MOUNTING

The backspace pawl is mounted to the escapement bracket directly above the escapement pawl. Movement of the backspace pawl to the left also moves the carrier and the escapement pawl to the left.

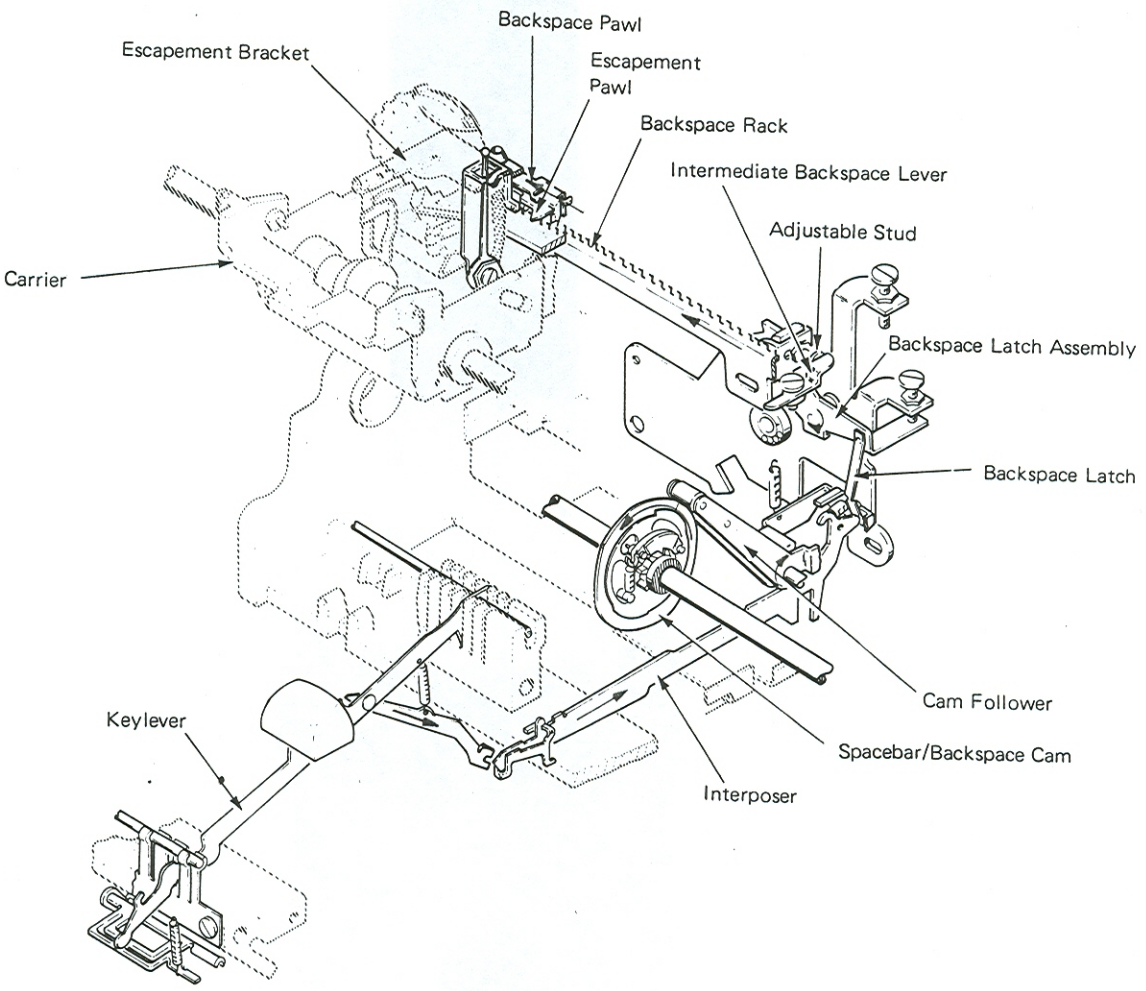

Figure 1 – Backspace Mechanism

PAWL OPERATION

The escapement pawl has a small stud on its upper surface which extends through an elongated slot in the backspace pawl (Figure 2). This stud ensures that the pawls move laterally together. The slot in the backspace pawl allows either pawl to move front to rear. When the backspace rack pushes to the left against the backspace pawl, the carrier moves to the left. The escapement pawl moves with the backspace pawl and will move out of the rack tooth and into the previous rack tooth.

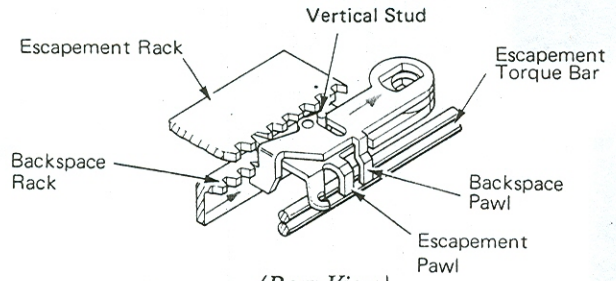

(Rear View)

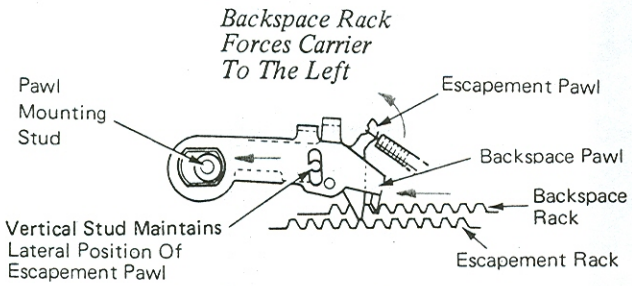

Figure 2 – Pawl Movement – Operating (Top View)

The backspace rack is spring loaded to the right. When the backspace operation is completed, the backspace rack returns to its rest position. The carrier is held by the escapement pawl; the stud maintains the position of the backspace pawl allowing it to drop into the next tooth of the backspace rack as the rack restores (Figure 3).

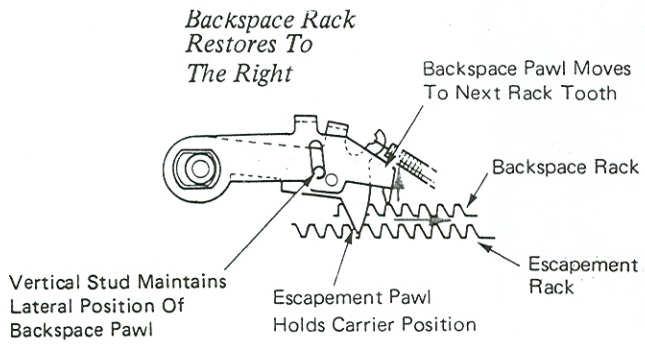

Figure 3 – Pawl Movement – Restoring (Top View)

NONROTARY BACKSPACE ADJUSTMENTS

NOTE: All operational control adjustments must be correct before making backspace adjustments.

1. *Backspace Latch Height* – Adjust the backspace latch adjusting screw for .001"-.015" (0.03-0.38 mm) clearance between the latch and the cam follower lever. This adjustment should be made to the low side of the specification to ensure a minimum of lost motion.

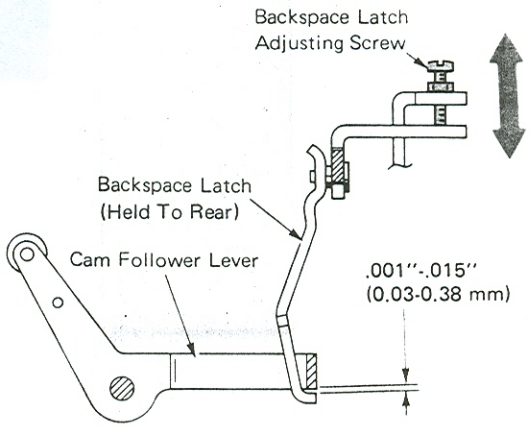

(Right Side View)

2. *Tab Lever Stop – Level 1* – Form the stop front and rear for a clearance of .001"-.003" (0.03-0.08 mm) between the vertical lug on the tab lever and the backspace pawl when the pawl is bottomed in its rack.

NOTE: Make sure all escapement bracket and print escapement adjustments are correct before forming this stop.

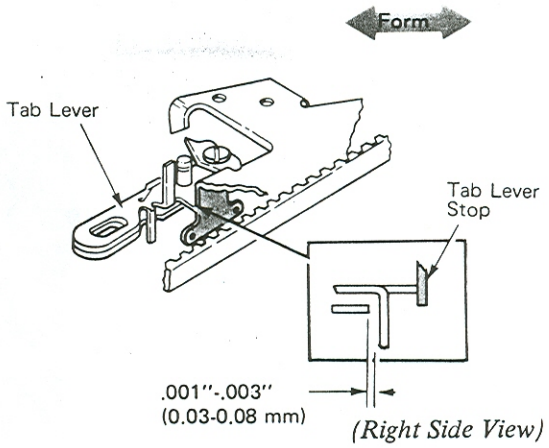

(Right Side View)

(Level 1)

Level 2 – Form the stop front and rear for a clearance of .005"-.010" (0.13-0.25 mm) between the vertical lug on the escapement pawl lever and the backspace pawl when the pawl is bottomed in its rack.

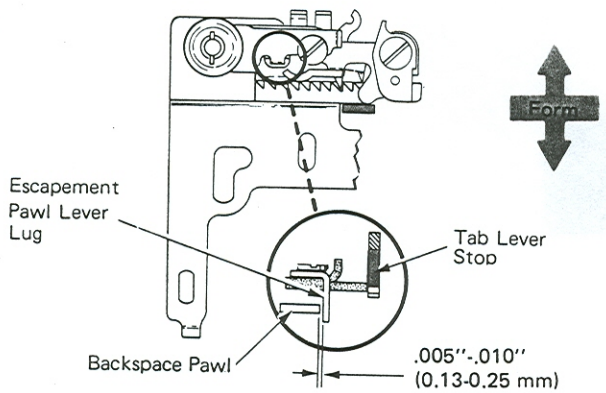

(Top View – Level 2)

3. *Backspace Rack* – With the machine at rest, adjust the backspace bellcrank screw in or out to get .005"-.015" (0.13-0.38 mm) clearance between the working surface of a rack tooth and the backspace pawl. Check at both ends of the writing line.

   This adjustment keeps lost motion to a minimum and ensures that the backspace pawl will positively reset in the next rack tooth at the completion of a backspace operation.

   No clearance can cause escapement problems as well as backspace problems by allowing the backspace pawl, instead of the escapement pawl, to hold the carrier.

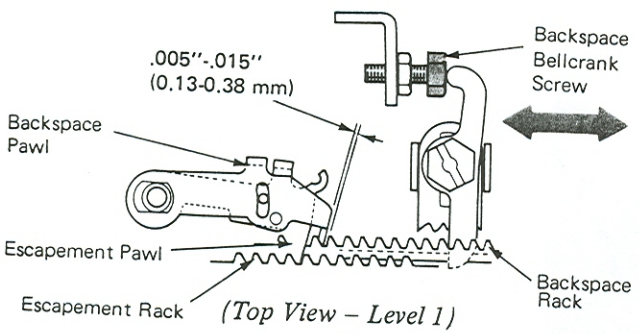

(Top View – Level 1)

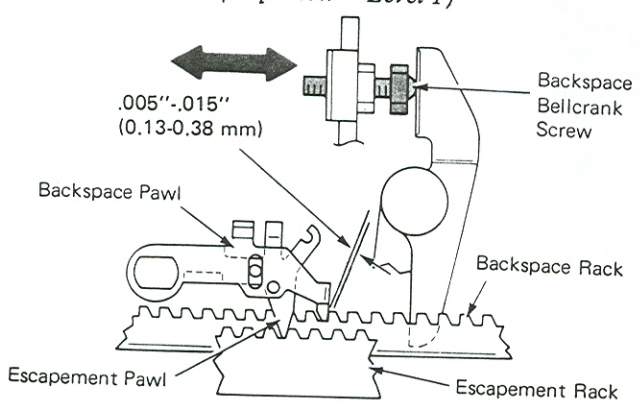

(Top View – Level 2)

4. *Backspace Motion* – This adjustment is gotten by adjusting the intermediate lever front-to-rear. Any time this adjustment is changed, the backspace rack adjustment should be checked and readjusted if necessary. Moving the lever to the rear increases backspace rack motion.

   Level 1 – With the backspace cam manually operated to the high point, the escapement pawl should drop into the previous rack tooth and overthrow by .005"-.010" (0.13-0.25 mm). Adjust the intermediate lever front-to-rear to get this adjustment.

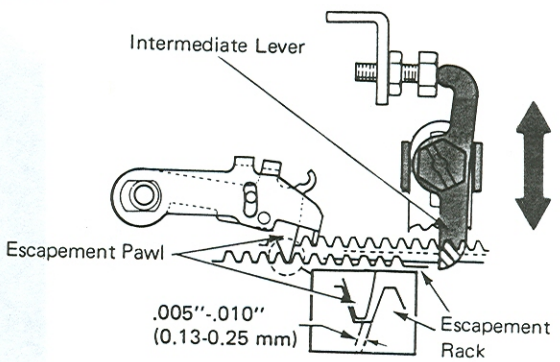

(Top View – Level 1) Cam On High Point

Levels 2 And 3 – Adjust the intermediate lever on level 2 and the backspace adjusting screw on level 3 so that a backspace operation just fails under hand operation. During a powered backspace operation, the carrier develops enough motion for a positive operation. Too much motion will cause double or space-and-a-half backspacing.

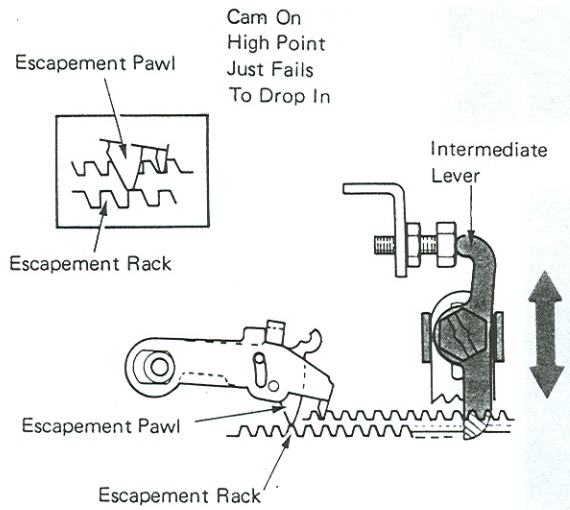

(Top View – Level 2) Cam On High Point

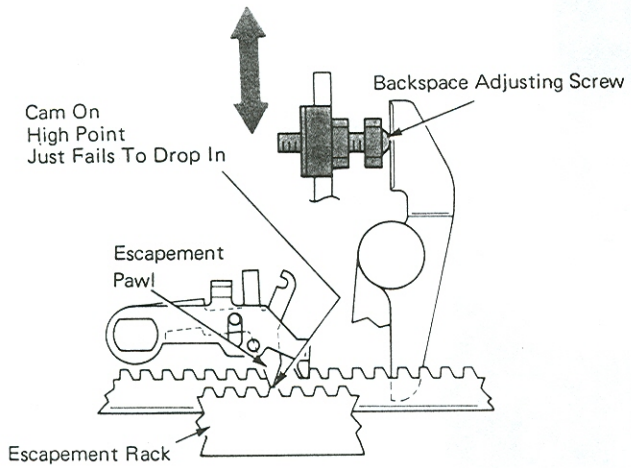

(Top View – Level 3) Cam On High Point

ROTARY BACKSPACE (RB/S) OPERATIONAL THEORY

The rotary backspace mechanism pulls the carrier return/backspace cable to move the carrier to the left one space at a time. This mechanism functions with either 10 or 12 pitch machines or on dual pitch machines in either pitch.

Because of this different way of backspacing, the carrier transport system is a little different. The main difference in the transport system is the use of strong steel cable(s) that reduce stretch. The tab/escapement cable or cord is attached in approximately the same manner as the NRB/S tab/escapement cord. The carrier return/backspace cable is attached at the carrier to an arm on the cable anchor bracket. This arm is free to pivot and is heavily spring loaded to the right against a stop lug. The purpose of the pivot arm and spring is to take up the shock when the carrier is pulled to the left by the cable. The other end of the cable is attached to the carrier return/backspace cable drum. The carrier return/backspace cable drum and backspace ratchet are one piece and operate as a unit (Figure 1).

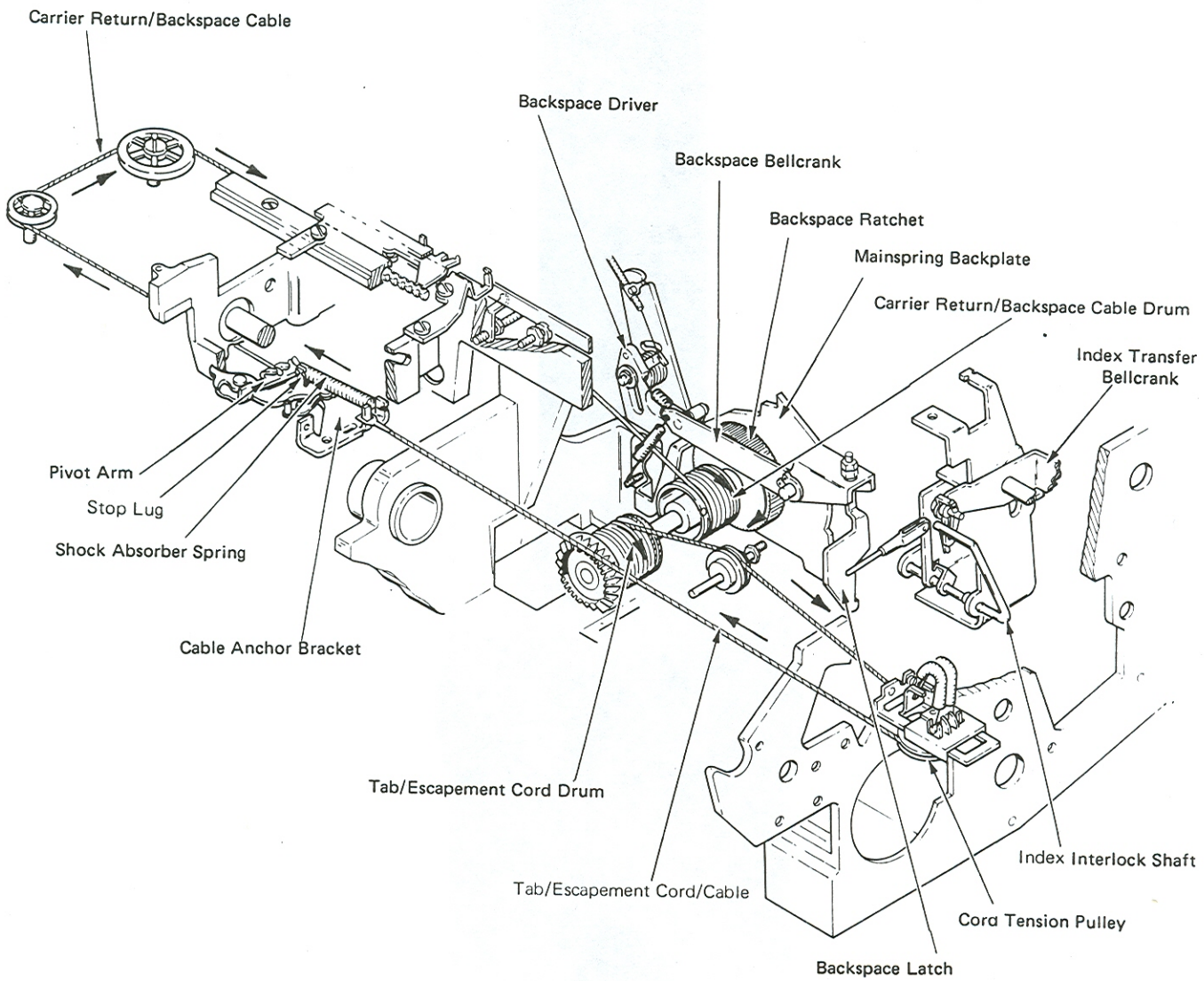

Figure 1 – Rotary Backspace Mechanism (Right Front View)

CABLE TENSION SYSTEM

For proper operation, it is necessary to maintain a constant tension on the transport cables or cords. The cables or cords are wound in opposite directions. The tab/escapement cord drum is attached to the front of the escapement shaft and winds the cord in a counterclockwise direction. The carrier return/backspace cable drum assembly is attached to the back of the escapement shaft and winds the cable in a clockwise direction. The right-hand transport pulley is spring loaded to the right and maintains a constant tension on the transport cable and cord (Figure 2).

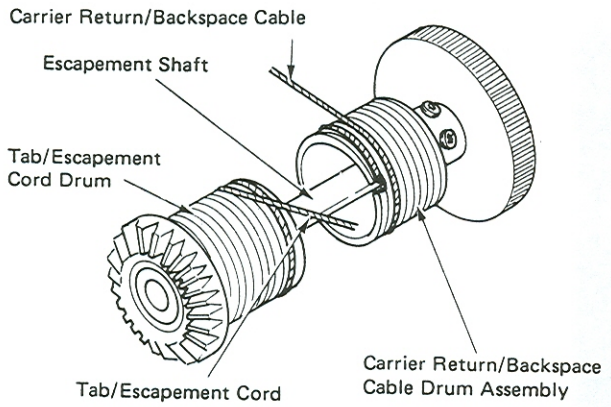

Figure 2 – Level 2 Cable Tension System

LEVEL 1

On level 1 machines, the tab/escapement cable drum is attached to the front of the escapement shaft, but the carrier return/backspace cable drum is free to rotate on the escapement shaft (Figure 3).

A constant pressure is applied to the carrier return/backspace cable drum through the cable tension arm and cable tension spring. The cable tension arm has a "D" shaped mounting hole which fits over a flat on the escapement shaft, which causes it to turn with the shaft. The cable tension spring is attached to a lug on the cable tension arm and an anchor stud on the backspace ratchet, which is permanently attached to the carrier return/backspace cable drum. This spring keeps the transport cables tight.

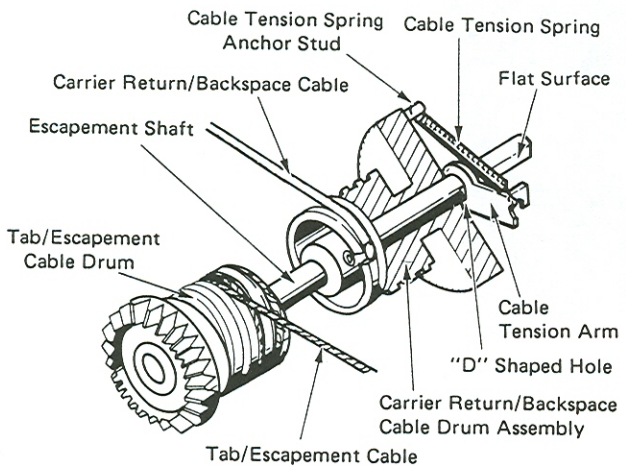

Figure 3 – Level 1 Cable Tension System

ROTARY BACKSPACE OPERATION

Rotary backspace operates from the same single sided operational cam and cam follower as carrier return and index. The spacebar is the only function operated by the double cam.

The operation of the backspace mechanism from the keybutton to the backspace latch is covered in the Operational Control Section of this manual.

Since the backspace ratchet and the carrier return/backspace cable drum are one piece, when the backspace ratchet rotates clockwise (as viewed from the front), the cable drum will also rotate clockwise pulling the carrier return/backspace cable. The motion to rotate the drum is provided by the backspace latch, backspace bellcrank, backspace links and backspace driver. The bellcrank and driver are mounted on studs on the mainspring backplate. The driver mounting hole is a slot (Figure 4).

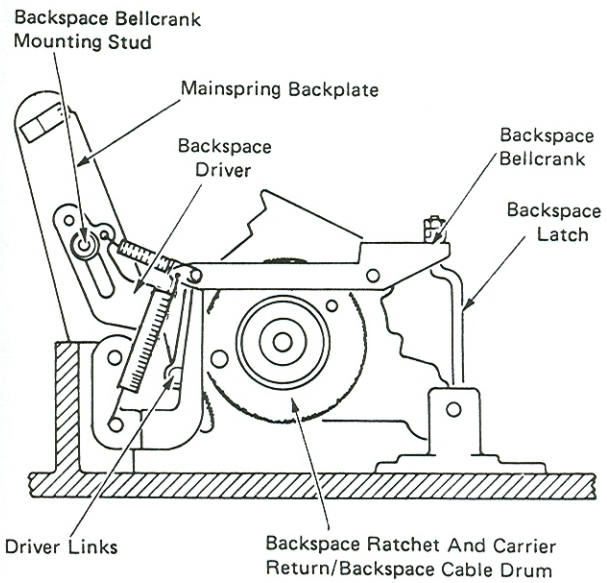

Figure 4 – Rotary Backspace At Rest (Front View)

As the latch is pulled down by the cam follower, it pulls down on the right end of the bellcrank, causing the left end to move up. The bellcrank is connected to the driver by the driver links and spring. As the left end of the bellcrank moves up, it pulls up on the driver links. The driver causes it to first pivot or rotate on its mounting stud until it contacts the backspace ratchet (Figure 5).

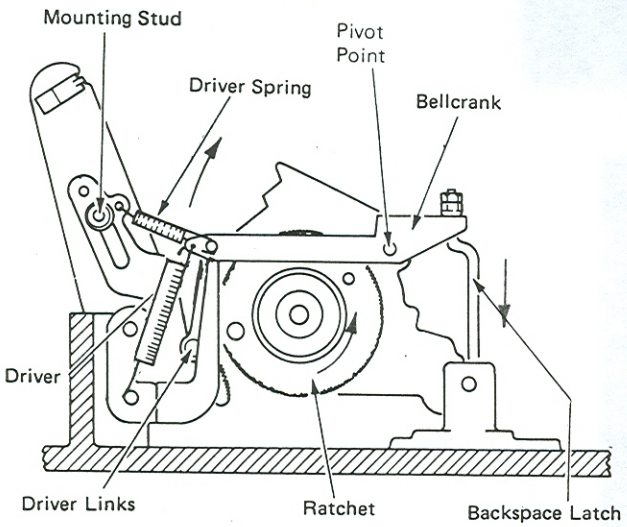

Figure 5 – Driver Engaged In Ratchet

When the backspace driver teeth have bottomed in the teeth of the backspace ratchet, the driver no longer pivots but starts to drive up in its slot, rotating the backspace ratchet (Figure 6).

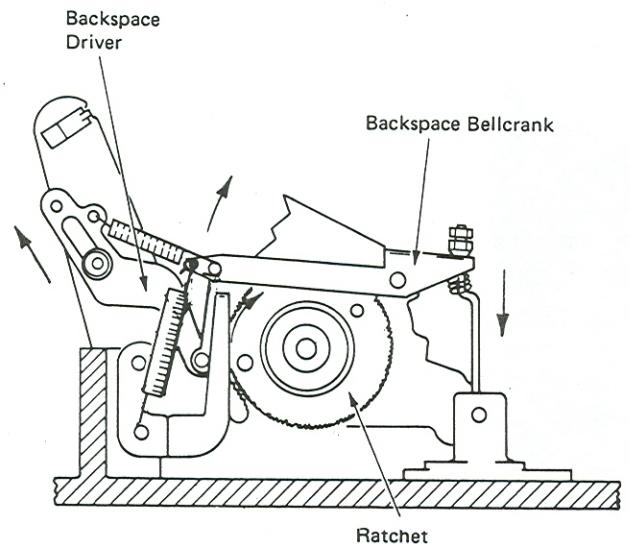

Figure 6 – Rotary Backspace Operated Position (Front View)

On dual pitch machines, the amount of pull on the carrier return/backspace cable must be controlled so that the rotary backspace operates reliably in either 10 or 12 pitch. This is done on dual pitch machines by a pitch cam which is mounted on the backspace driver mounting stud. A stud on the driver rests on top of the cam surface of the pitch cam. The driver stud resting on either the low point or high point of the pitch cam controls the rest position (starting pivot point) of the driver. This determines the point at which the driver engages the backspace ratchet. In the 10 pitch mode, the driver engages the ratchet at a lower point, giving more rotary motion to the ratchet. In the 12 pitch mode, it engages the ratchet at a higher point, giving less motion. The position of the pitch cam is controlled by a cable connected to the switch pitch lever (Figure 7).

The amount of pull on single pitch machines is controlled by the motion adjustment (covered in the adjustment section).

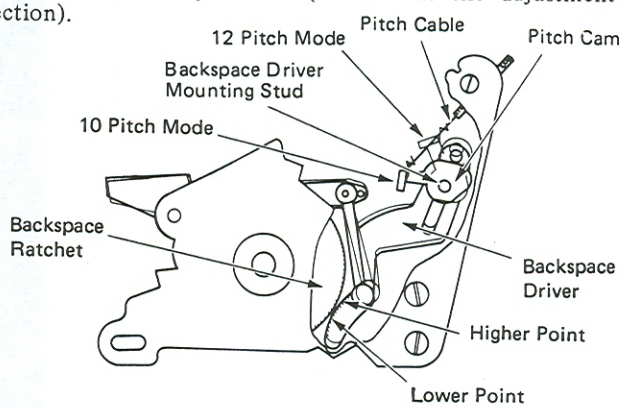

Figure 7 – Rotary Backspace Switch Pitch Operation (Rear View)

INDEX INTERLOCK

Since the rotary backspace mechanism uses the same cam and cam follower as carrier return and index, it is necessary to interlock the index mechanism during a backspace operation. The lower index link is connected at the bottom to the index multiplying lever. It is connected at the top by a stud in a slot in the index transfer bellcrank. The top of the link is spring loaded toward the front, therefore, its rest position is in the front of the slot. When carrier return or index is operated, the top of the link maintains its rest position in the slot and operates the index transfer bellcrank (Figure 8).

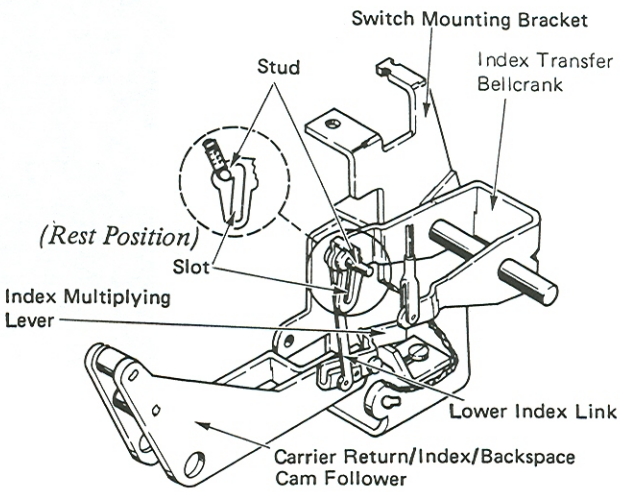

Figure 8 – Index Interlock Normal Index Operation (Right Front View)

The rear motion of the backspace latch is used to operate the index interlock. An index interlock link connects the backspace latch to the index interlock bellcrank. The index interlock bellcrank is attached to the index interlock shaft which pivots in the switch mounting bracket. The end of the index interlock shaft is positioned directly in front of the lower index link. When the backspace latch moves to the rear, the interlock bellcrank moves the top of the lower index link to the rear of the slot. When the backspace is operated, the index multiplying lever is still operated, but the lower index link will move down in the slot and the index transfer bellcrank will remain at rest (Figure 9).

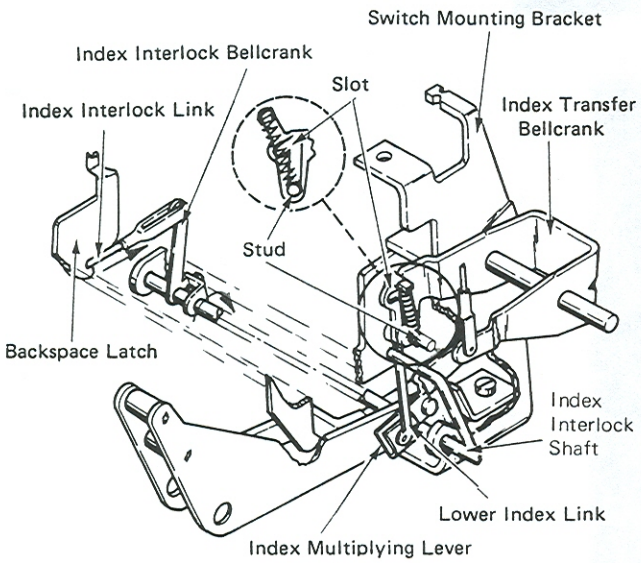

Figure 9 – Index Interlock Backspace Operation (Right Front View) (Level 2)

Level 1 machines have a paddle on the end of the index shaft that is positioned directly in front of the stud on the top of the lower index link (Figure 10).

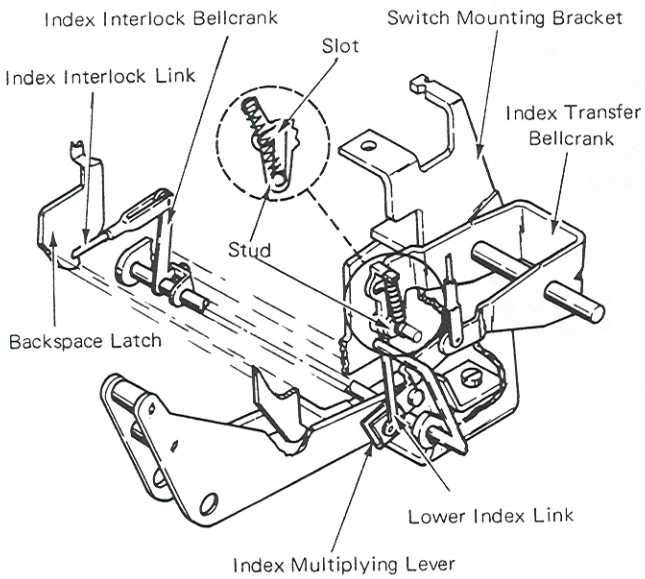

Figure 10 – Index Interlock Backspace Operation (Right Front View) (Level 1)

ROTARY BACKSPACE ADJUSTMENTS

1. *Mainspring Hub* – Adjust the mainspring hub for .001"-.004" (0.03-0.10 mm) end play of the escapement shaft in the rear escapement bearing. This adjustment should be made with the escapement shaft collar loose.

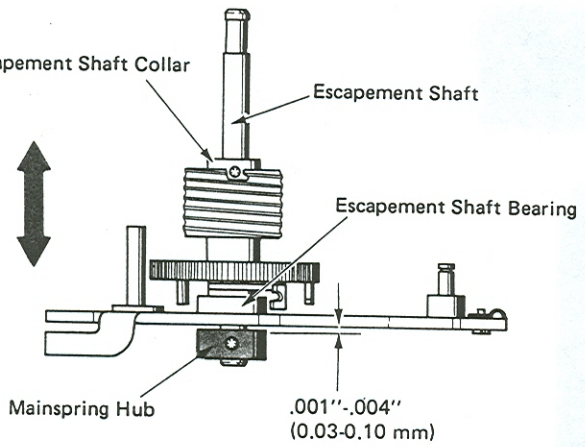

(Top View)

2. *Escapement Shaft Collar – Level 1* – Adjust the escapement shaft collar for minimum end play with no binds of the carrier return/backspace cable drum on the escapement shaft.

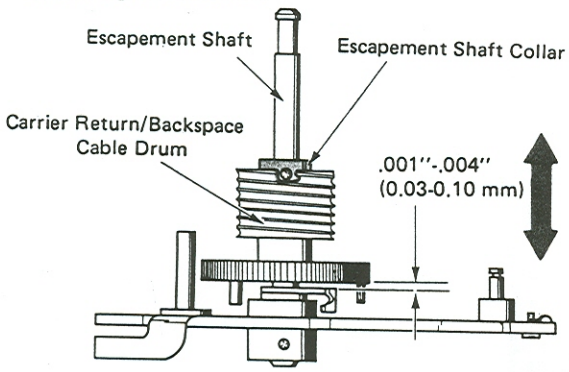

(Level 1) (Top View)

Level 2 – With the escapement shaft end play removed toward the front of the machine, adjust the carrier return/backspace cable drum on the shaft for minimum end play no binds.

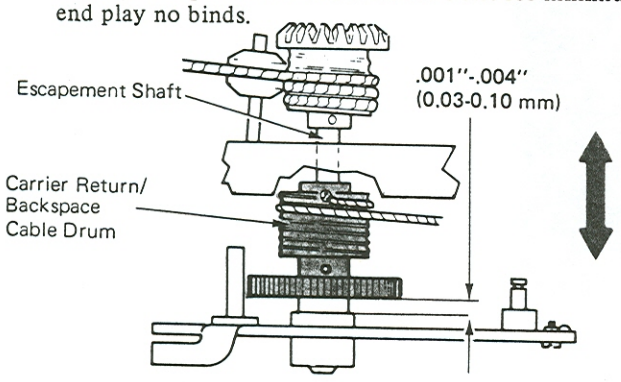

(Level 2) (Top View)

3. *Transport Cable Tension* –

Level 1 – On all steel transport machines, adjust the right-hand cable pulley left or right so the cable tension arm clears the stop stud on the backspace ratchet by .040"-.050" (1.02-1.27 mm).

NOTE: If the right-hand cable pulley reaches either end of the adjustment slot, the tab/escapement cable drum must be repositioned on the escapement shaft.

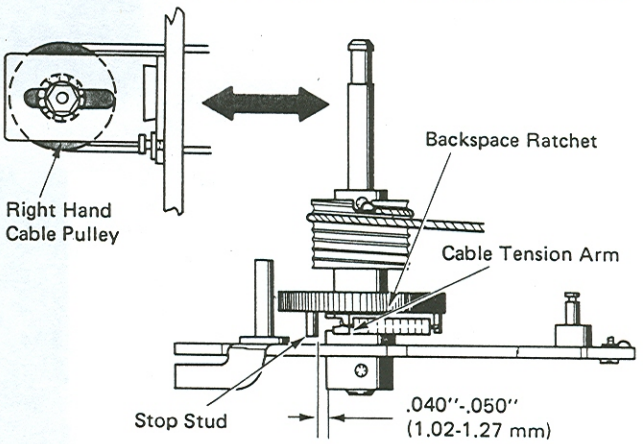

(Level 1) (Top View)

Level 2 – On dual transport equipped machines (nylon tab/escapement cord), adjust the carrier return/backspace cable drum so the nylon pulley bracket aligns with the line on the mounting bracket.

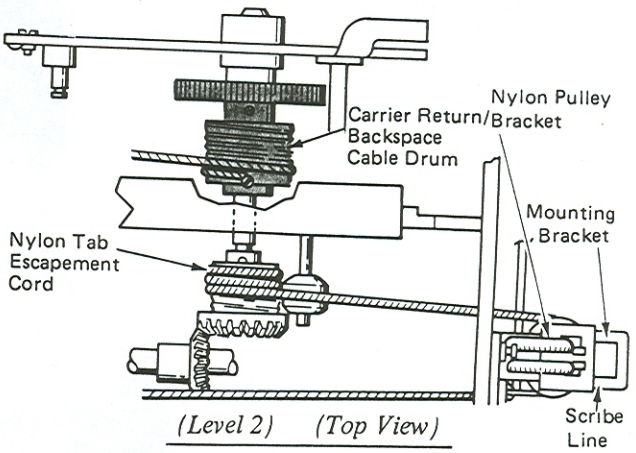

(Level 2) (Top View)

4. *Pitch Cam Cable Cover (Dual Pitch Only)* – The pitch cam cable cover should extend 1/8"-1/4" (3.18-6.35 mm) beyond the clamp on the mainspring backplate.

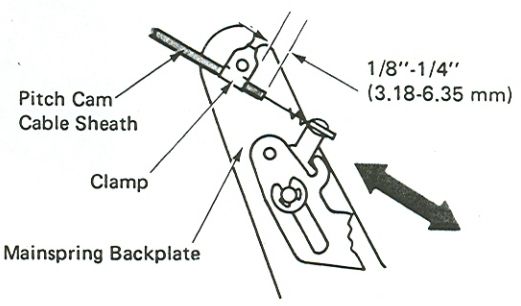

5. *Pitch Cam (Dual Pitch)* – In the 12 pitch mode, hand cycle the backspace until the driver just bottoms in the ratchet. Adjust the pitch cam cable cover on the left carriage end plate so the line on the pitch cam lines up with the center of the stud on top of the backspace driver. Observe this condition through the hole in the backplate.

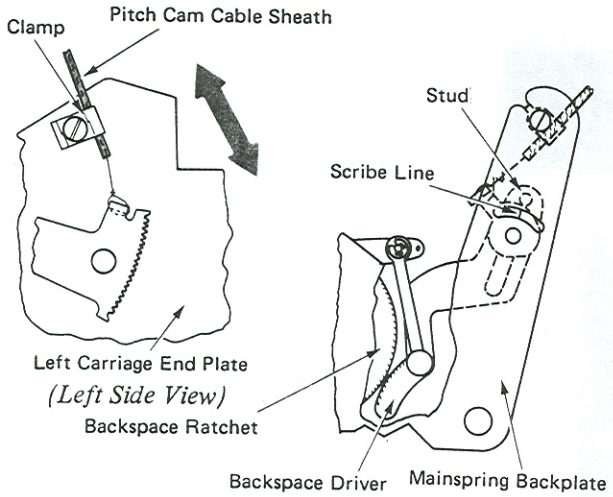

6. *Backspace Motion – Level 1* – Place dual pitch machines in the 10 pitch mode. Position the carrier approximately in the center of the writing line. Hand cycle 5 backspaces. Adjust the nut on top of the backspace latch so that all 5 backspaces move an additional .015"-.045" (0.38-1.14 mm) after the escapement pawl drops into the next rack tooth. This must be checked for 5 backspaces because the motion at the carrier can differ as much as .020" (0.51 mm). It may be necessary to manually place the latch below the cam follower to check this adjustment.

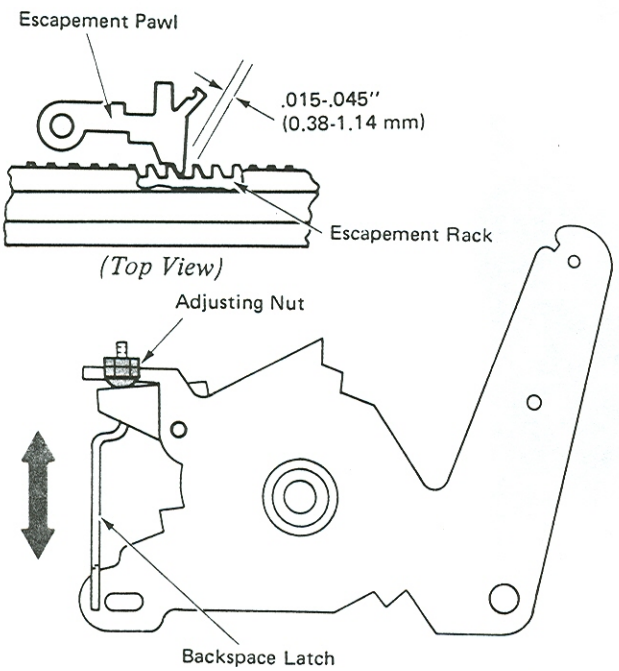

Level 2 –

NOTE: On dual pitch machines, the pitch cam adjustment must be properly adjusted in the 12 pitch mode before making this adjustment.

a. Adjust the downstop for a .030"-.040" (0.76-1.02 mm) clearance between the driver and ratchet. If the machine is dual pitch, it must be in the 10 pitch mode.

CAUTION: Be sure the bellcrank does not slip behind the downstop as it restores to rest. Form stop if necessary.

b. Adjust the backspace latch for reliable backspacing under power with a slight finger pressure on top of the carrier.

CAUTION: If latch does not go under the bail, make the adjustment again.

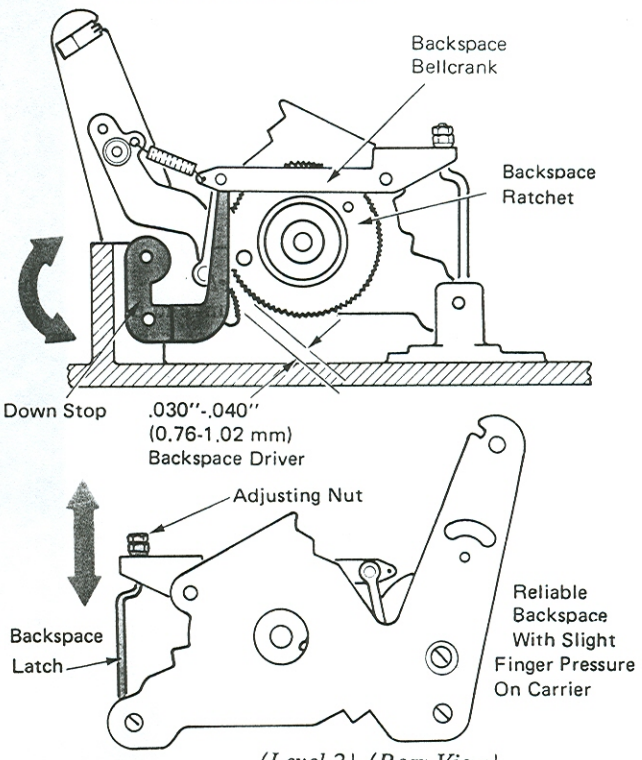

7. *Backspace Latch Height* – Form the backspace bellcrank stop lug on the mainspring backplate for .001"-.020" (0.03-0.51 mm) backspace latch clearance under the bail. After making this adjustment, check for some clearance between the backspace driver and the backspace ratchet with all parts at rest. If no clearance exists, readjust the backspace motion and the backspace latch height adjustments.

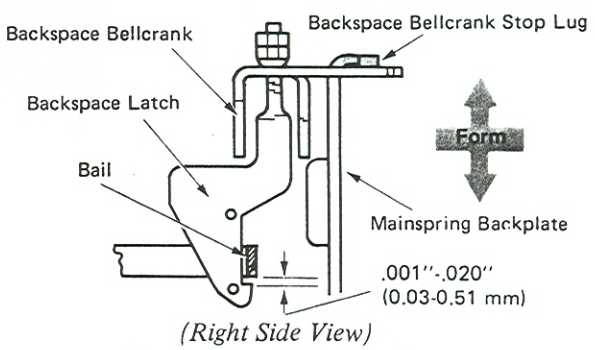

8. *Switch Bracket* – Adjust the switch bracket left or right to ensure that the lower index link does not bind in the slot in the index transfer bellcrank.

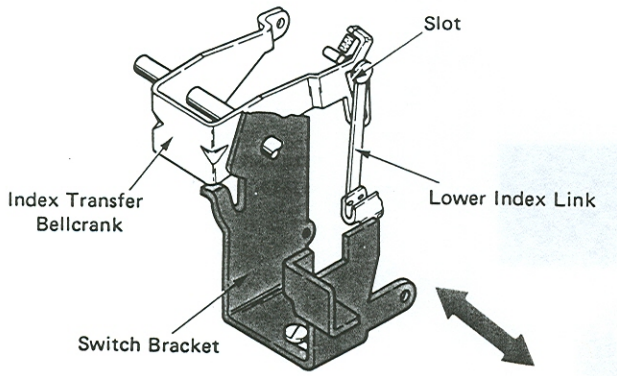

9. *Index Interlock Link* – Adjust the index interlock link so the index interlock bellcrank arm is vertical.

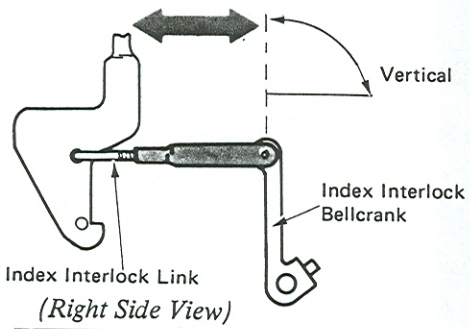

10. *Index Interlock Shaft (Levels 1 And 2)* – Adjust the index interlock shaft left or right so the paddle clears the lower index link spring by .001"-.010" (0.03-0.25 mm). Check for interference with the escapement trigger upstop. Maintain minimum end play with no binds.

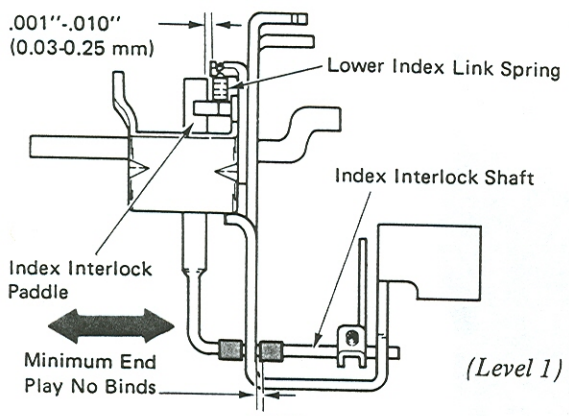

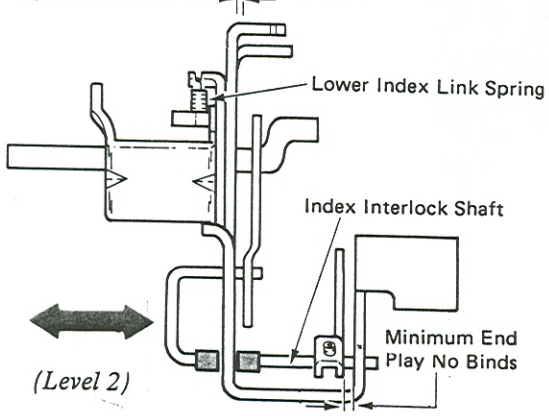

Level 3 – Adjust the index interlock shaft bellcrank left or right to get minimum end play, no binds between the switch bracket and the bellcrank.

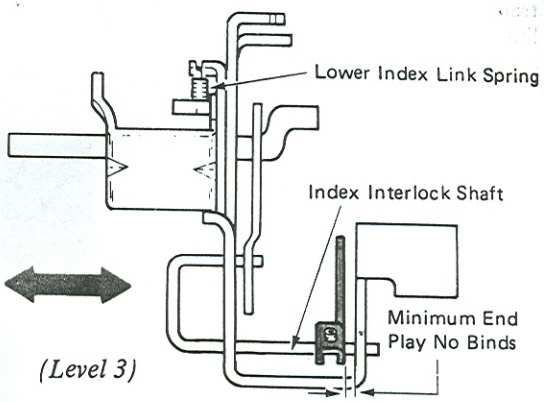

11. *Index Interlock Paddle (Level 1)* – Loosen the setscrew on the index interlock bellcrank. Adjust the paddle front-to-rear for .020"-.040" (0.51-1.02 mm) clearance to the stud on the lower index link. Position the bellcrank left or right to ensure the interlock link does not bind in the backspace latch or at the clevis.

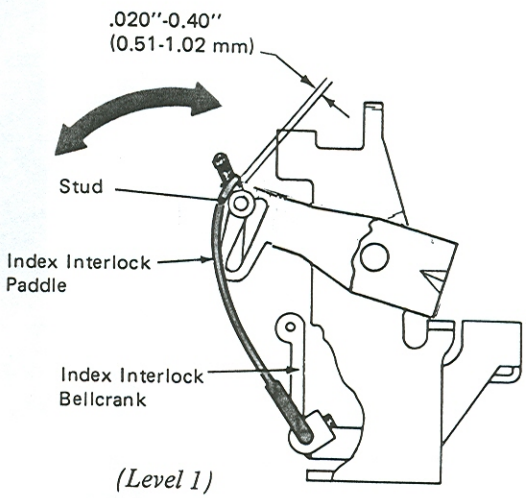

(Right Side View)

Levels 2 And 3 – Adjust the index interlock shaft front to rear for .020"-.040" (0.51-1.02 mm) clearance to the link on the index transfer bellcrank.

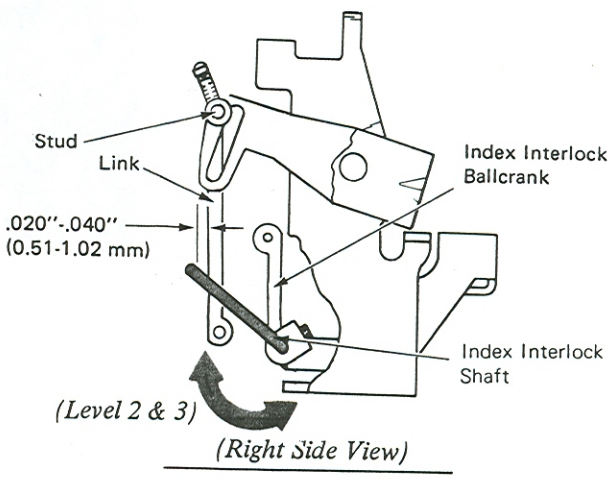

(Right Side View)

12. *Index Transfer Bellcrank Stop Lug* – Form the index transfer bellcrank stop lug for minimum clearance with no binds between the stud on the lower index link and the lower horizontal edge of the slot in the index transfer bellcrank. This will ensure that the lower index link stud reliably restores to the front of the slot after a backspace operation.

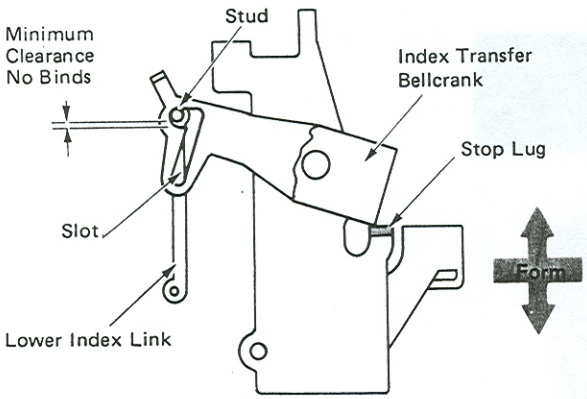

(Right Side View)

13. *Spacebar Link* – With the escapement trip link properly adjusted, adjust the spacebar link for .001"-.012" (0.03-0.30 mm) between the clevis pin and the bottom of the slot in the trigger lever.

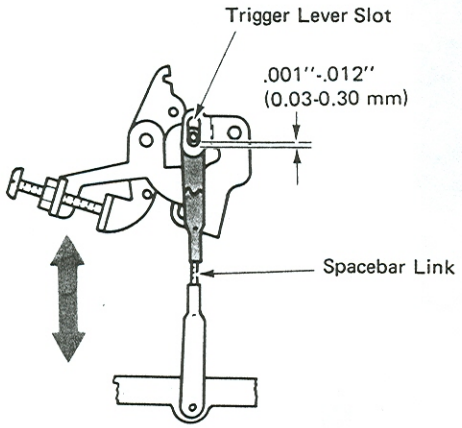

(Left Side View)

14. *Backspace Interposer Spring* – The backspace interposer spring must be in the center hole in the interposer.

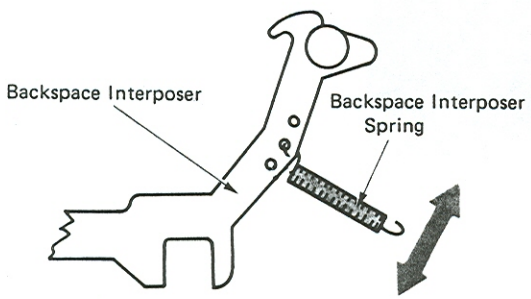

(Right Side View)

HALF BACKSPACE OPERATIONAL THEORY

The half backspace mechanism allows the typist to move the carrier one half space to the left. As long as the half backspace lever is held forward, the carrier remains one half space to the left and the typewriter will type between the normal escapement positions. This is done by moving the escapement rack one half space to the left (Figure 1).

The movement of the escapement rack is provided by the half backspace lever, operating link, cam lever and half backspace cam. When the half backspace lever is operated, it pulls up on the operating link, which rotates the cam lever, forcing it to the left, out of its bottom position with the half backspace cam. The cam lever then contacts the escapement rack gear, which is attached to the escapement rack. This cam action moves the escapement rack to the left, moving the escapement pawl and carrier, to get a half backspace operation (Figure 1).

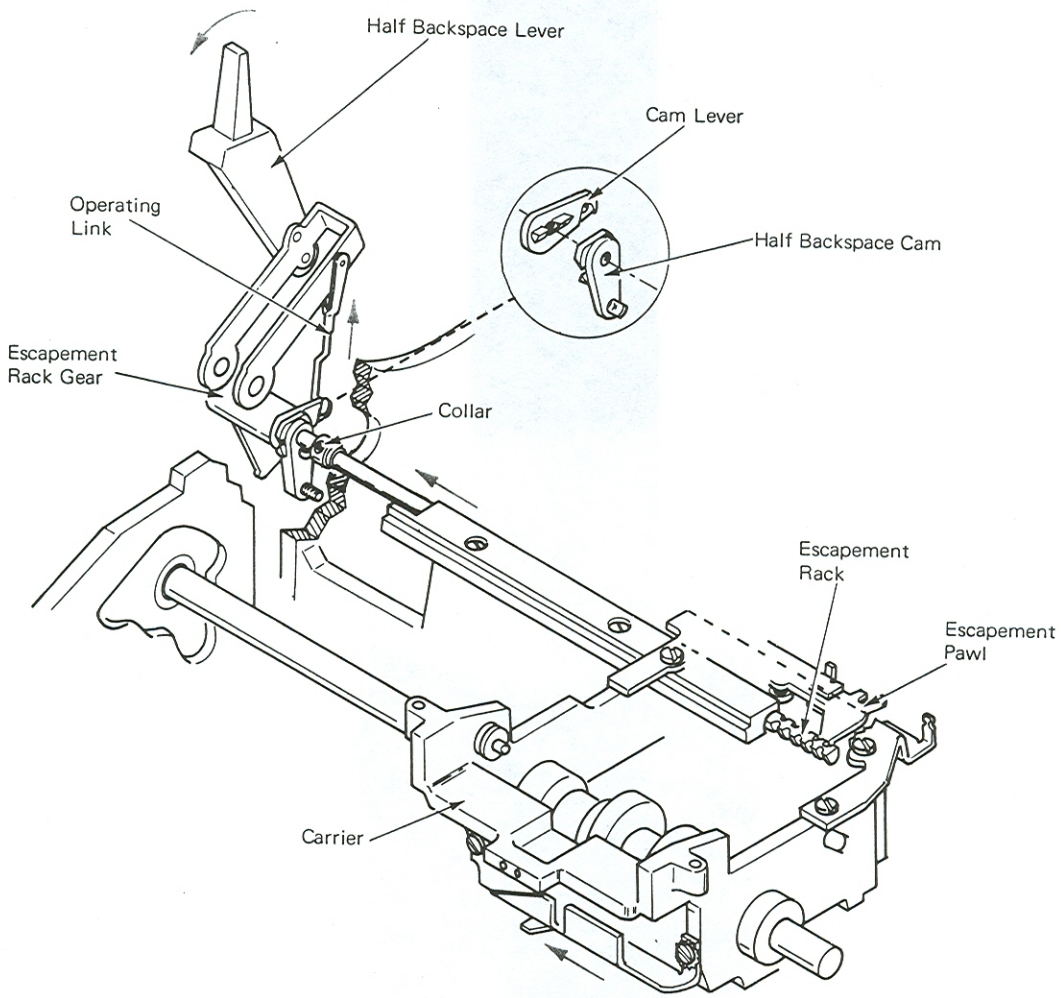

Figure 1 – Half Backspace Mechanism

HALF BACKSPACE LEVEL 1

On level 1 machines, the movement of the escapement rack is provided by the half backspace lever, intermediate lever and half backspace bellcrank. When the half backspace lever is operated, it operates the intermediate bellcrank, which operates the intermediate lever and pulls down on the half backspace bellcrank (Figure 2).

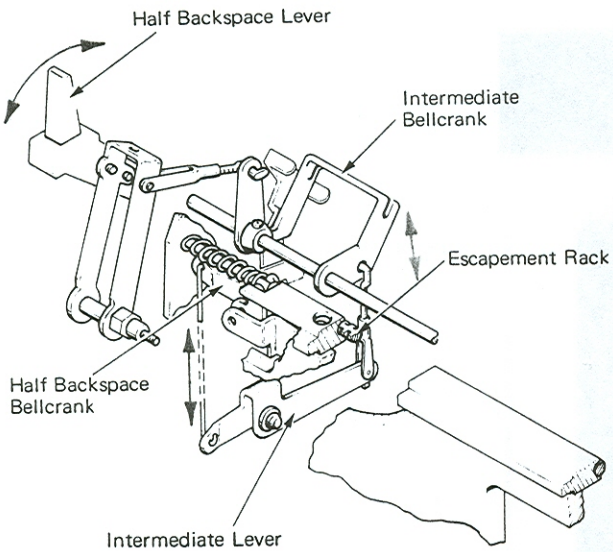

Figure 2 – Half Backspace Mechanism (Level 1)

ESCAPEMENT RACK MOVEMENT

A lug on the half backspace bellcrank is in a notch in the escapement rack. As the bellcrank is operated, the lug moves to the left, moving the escapement rack to the left. A compression spring restores the bellcrank and the escapement rack to their normal position. The working edge of the escapement rack notch has a step in it to allow for the different motion requirements for the two pitches (Figure 3).

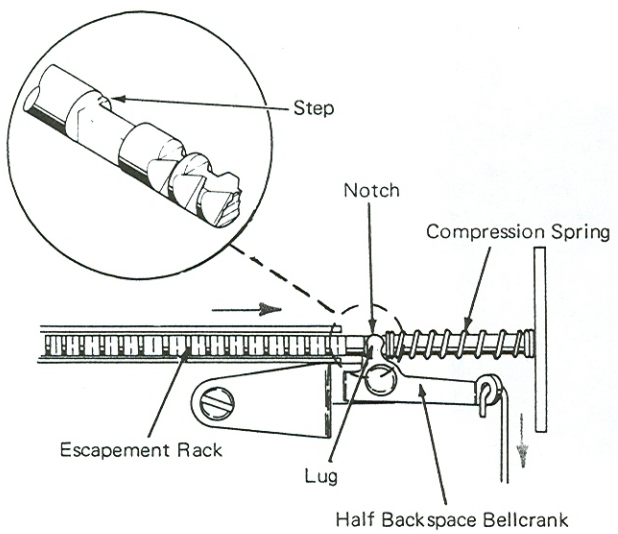

Figure 3 – Escapement Rack Movement (Rear View)

HALF BACKSPACE ADJUSTMENTS

1. *Lower Half Backspace Link (Level 1)* – Place the machine in the 10 pitch mode. Adjust the lower half backspace link so that characters typed when half backspace is operated will be centered between characters typed normally.

NOTE: The switch pitch gear must be adjusted left to right to have .005"-.010" (0.13-0.25 mm) clearance between the escapement rack bearing plate and the switch pitch gear.

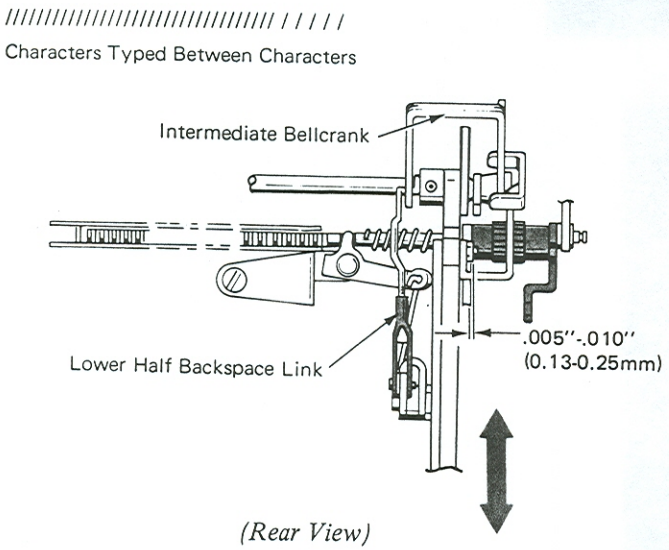

(Rear View)

2. *Switch Pitch Gear (Levels 2 And 3)* –. Adjust the escapement rack gear flush against (no clearance) the cam lever with the escapement rack in the 12 pitch mode.

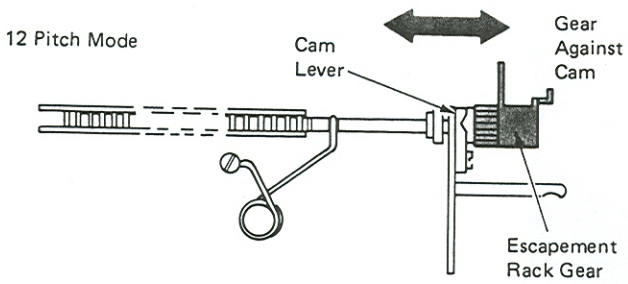

(Level 2 & 3)

3. *Half Backspace Collar (Levels 2 And 3)* – With the escapement rack in 12 pitch, position the escapement rack to ensure the teeth are vertical. Adjust escapement rack gear for minimum clearance between the gear and cam lever.

Adjust the half backspace collar so it contacts the top extension on the escapement rack bracket after approximately .045" (1.14 mm) movement of the escapement rack. Readjust so that characters typed when the half backspace is operated will be centered between characters typed normally.

NOTE: Setscrew should be toward the front of the machine in the 12 pitch mode.

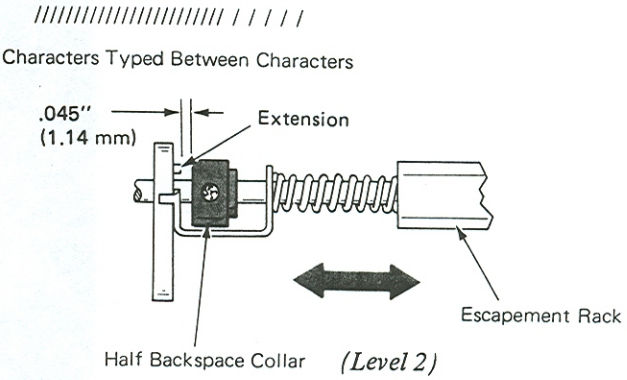

(Level 2)

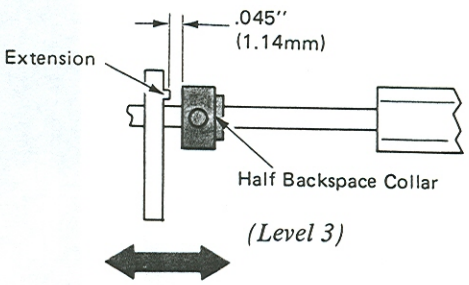

(Level 3)

The .045" (1.14 mm) adjustment can be made by inserting a 6 fluted wrench (used to adjust the Level 1 tilt ring setscrews) between the right end of the escapement rack, and the stop pin in the right end of the escapement rail.

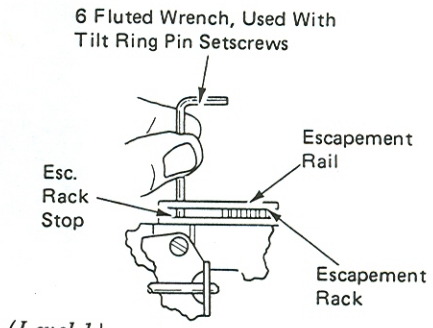

(Level 1)

(Left Rear View)

4. *Half Backspace Rest Position (Level 1)* – Hold the rear of the half backspace intermediate lever up lightly. Form the upper lug on the half backspace intermediate bellcrank so the pin in the clevis just matches the hole in the intermediate lever. This ensures that the escapement rack will rest against the pin in the escapement rail when the half backspace mechanism is at rest.

NOTE: On machines prior to "A frame" paper feed, take off the lower half backspace link.

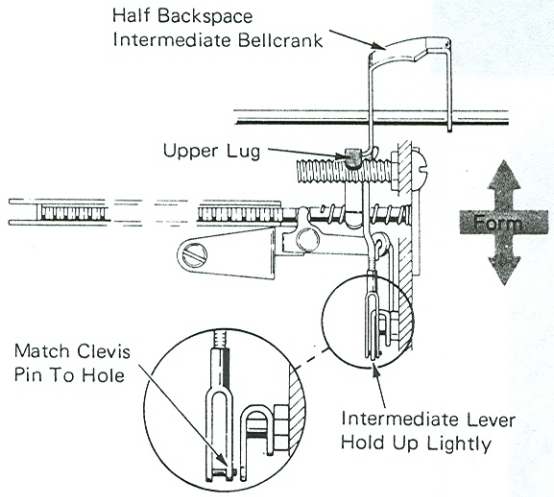

(Rear View)

Half Backspace Rest Position (Level 1) – On level 1 machines equipped with A frame paper feed, form the lower stop lug on the half backspace bellcrank control bracket so the pin in the clevis just matches the hole in the intermediate lever.

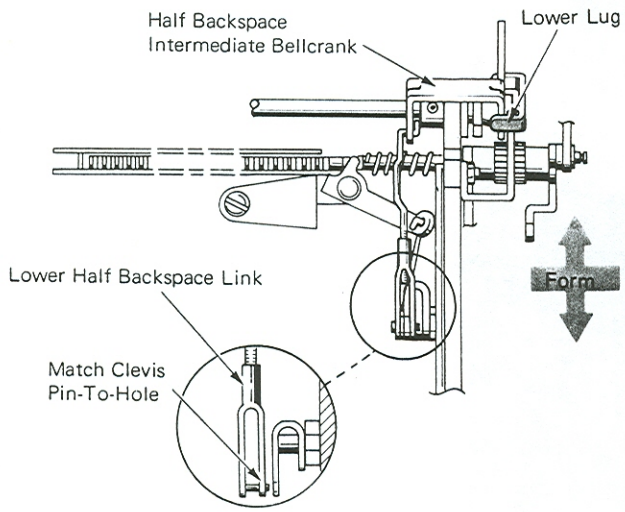

(Rear View)

5. *Half Backspace Lever (Level 1)* – Adjust the upper half backspace link so the front edge of the half backspace lever is in line with the rear edge of the platen bearing.

After the machine is placed in the covers, adjust the link so that the lever clears the end of the cover slot by about 1/16" (1.59 mm) when it is in the operated position.

On level 2 and 3 machines, adjust the operating link for this condition.

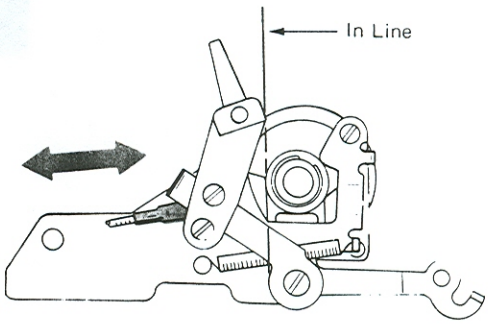

(Left Side View)

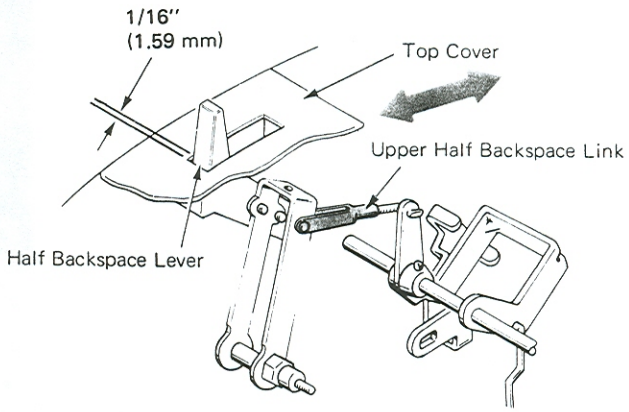

(Level 1)

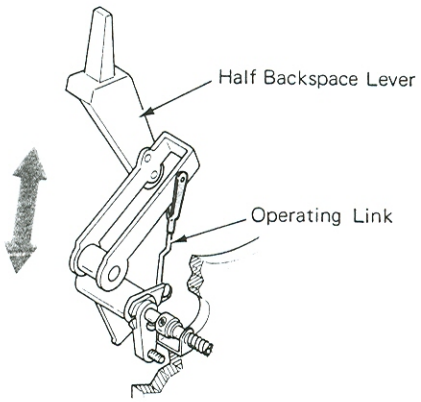

(Level 2 & 3)

EXPRESS BACKSPACE OPERATIONAL THEORY

The purpose of the express backspace mechanism is to allow the operator to move the carrier quickly to the left, from the keyboard. When the operator depresses the xpress backspace keybutton, the carrier will move to the left at the same speed as carrier return, with the escapement pawl dragging. The carrier movement stops when the keybutton is released or the left margin is reached.

The express backspace bellcrank pivots on an extension of the operational cam check pawl shaft. The express backspace shoe is mounted on the bellcrank, which is positioned under the carrier return clutch spring. When the EXP keybutton is depressed, the keylever pawl moves down and pushes on the right extension of the bellcrank. This causes the bellcrank to pivot up and press the express backspace shoe against the carrier return clutch spring. The carrier return clutch spring drives the carrier return pinion, moving the carrier to the left (Figure 1).

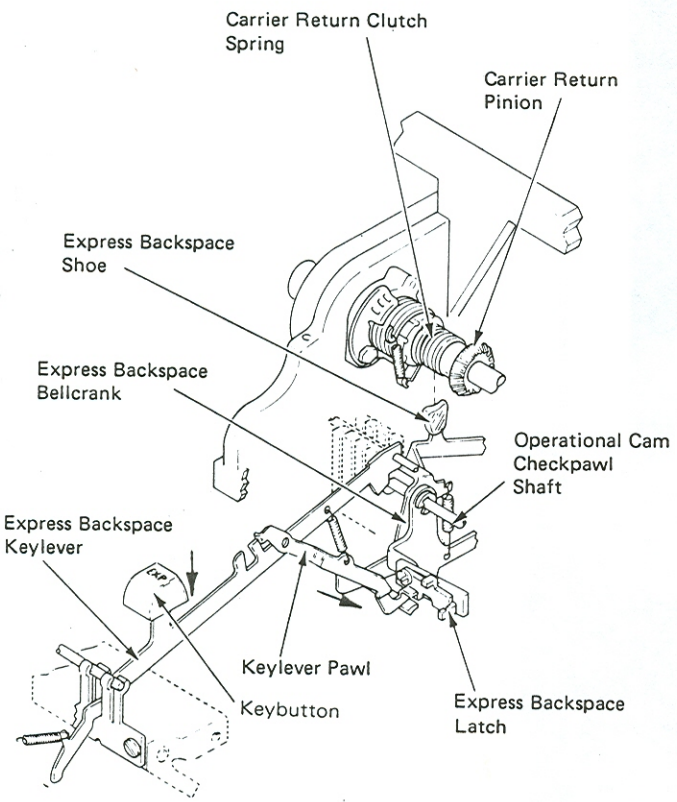

Figure 1 – Express Backspace

EXPRESS BACKSPACE LATCH (SINGLE PITCH ONLY)

On the NRB/S "Selectric" II Typewriter, there would be a possibility of the carrier holding on the backspace pawl when the express backspace keybutton is released and the carrier stops. An additional part, called the express backspace latch, prevents this from happening by causing a backspace operation when the EXP keybutton is released. The express backspace latch is mounted on the operational keylever pawl guide. When the EXP key is depressed, the express backspace keylever pawl rotates the express backspace latch, which releases the backspace interposer. At the same time, another extension of the latch moves behind a latching surface on the interposer and prevents it from moving far enough to the rear to release the operational cam. When the EXP key is released, it allows the express backspace latch to restore up, allowing the interposer to continue to the rear, causing a backspace operation (Figure 2).

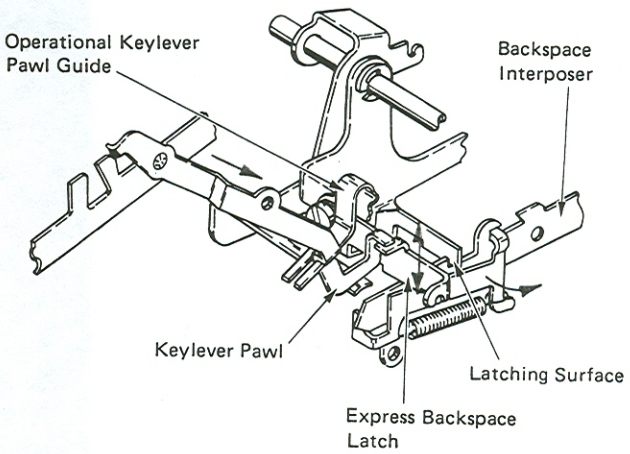

Figure 2 – Express Backspace (Single Pitch)

EXPRESS BACKSPACE ADJUSTMENTS

1. *Express Backspace Shoe Overlap (Level 1)* – Form the left arm of the express backspace bellcrank so the express backspace shoe overlaps a maximum of three coils of the carrier return clutch spring.

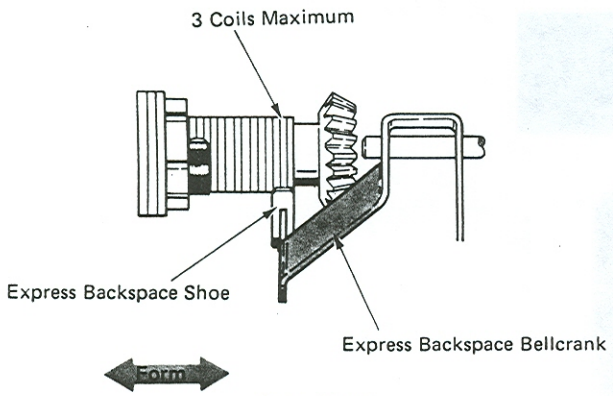

(Top View)

(Level 1)

Level 2 – Form the one-piece carrier return shoe arm left or right so that the return shoe overlaps a maximum of the last three coils on the right-hand end of the carrier return clutch spring, and there is equal shoe to pinion spring contact on all three coils.

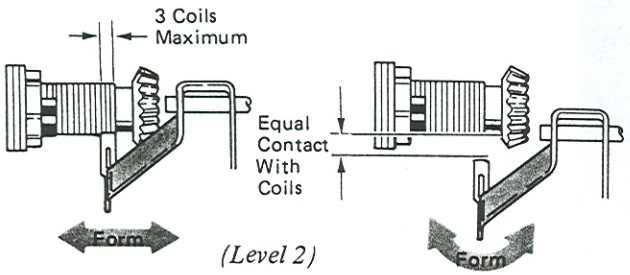

(Level 2)

2. *Keylever Pawl Guide* – Form the keylever pawl guide finger so the tip of the express backspace keylever pawl clears the guide plate by .040"-.080" (1.02-2.03 mm).

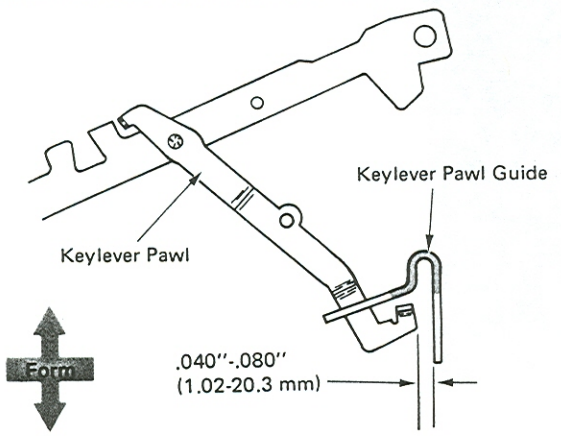

(Right Side View)

3. *Express Backspace Shoe Clearance* – Form the right lug on the express backspace bellcrank so the express backspace shoe engages the carrier return clutch spring when the keylever is .035"-.050" (0.89-1.27 mm) from the bottom of its guide comb slot.

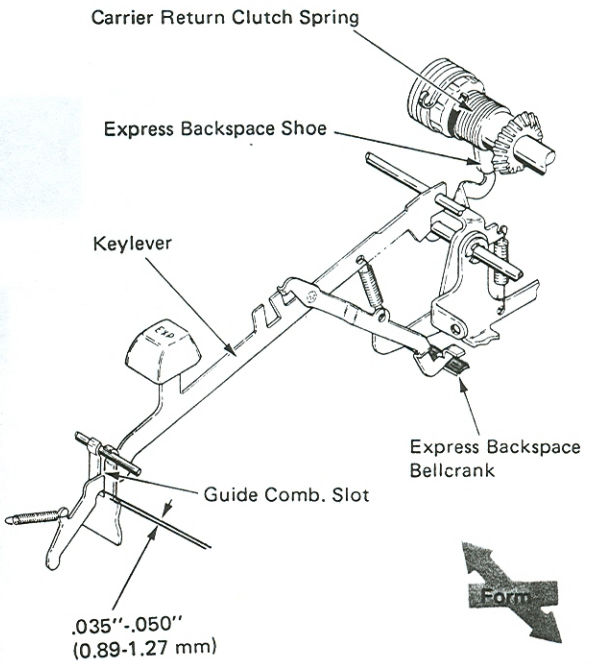

4. *Keylever Pawl (NRB/S Only)* – Form the lug on the express backspace keylever pawl so there is .010"-.020" (0.25-0.51 mm) between the express backspace latch and the backspace interposer latch.

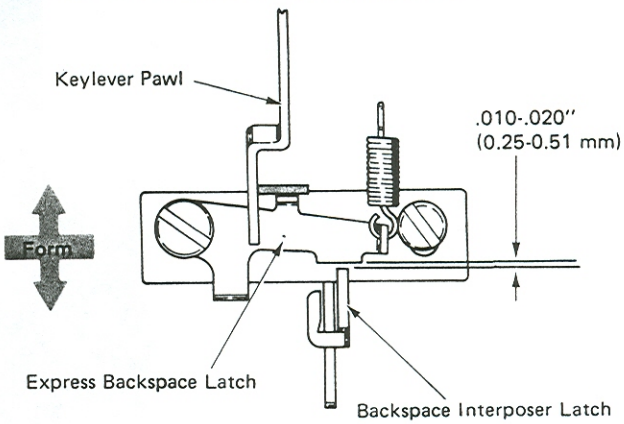

(Front View)

5. *Express Backspace Latch (NRB/S Only)* – Form the express backspace latch front to rear so the backspace interposer moves .001"-.010" (0.03-0.25 mm) to the rear when released by the latch.

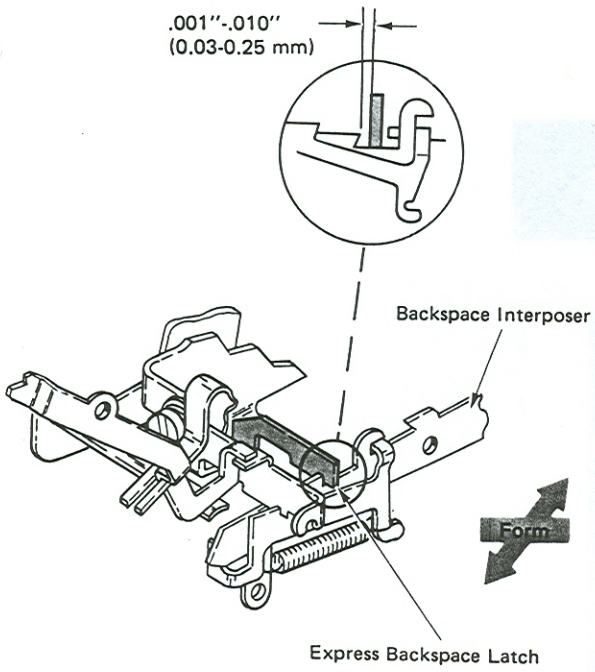

BLANK PAGE IN MANUAL FOR ADDING NOTES

TABULATION (NRB/S) OPERATIONAL THEORY

The purpose of the tab mechanism is to quickly move the carrier to the right to a desired position on the writing line. This is done by removing the escapement and backspace pawls from their racks and allowing the carrier to be pulled to the right under mainspring tension (Figure 1). When the carrier reaches a preset tab stop, the pawls are returned to their racks and the carrier is held in the new position.

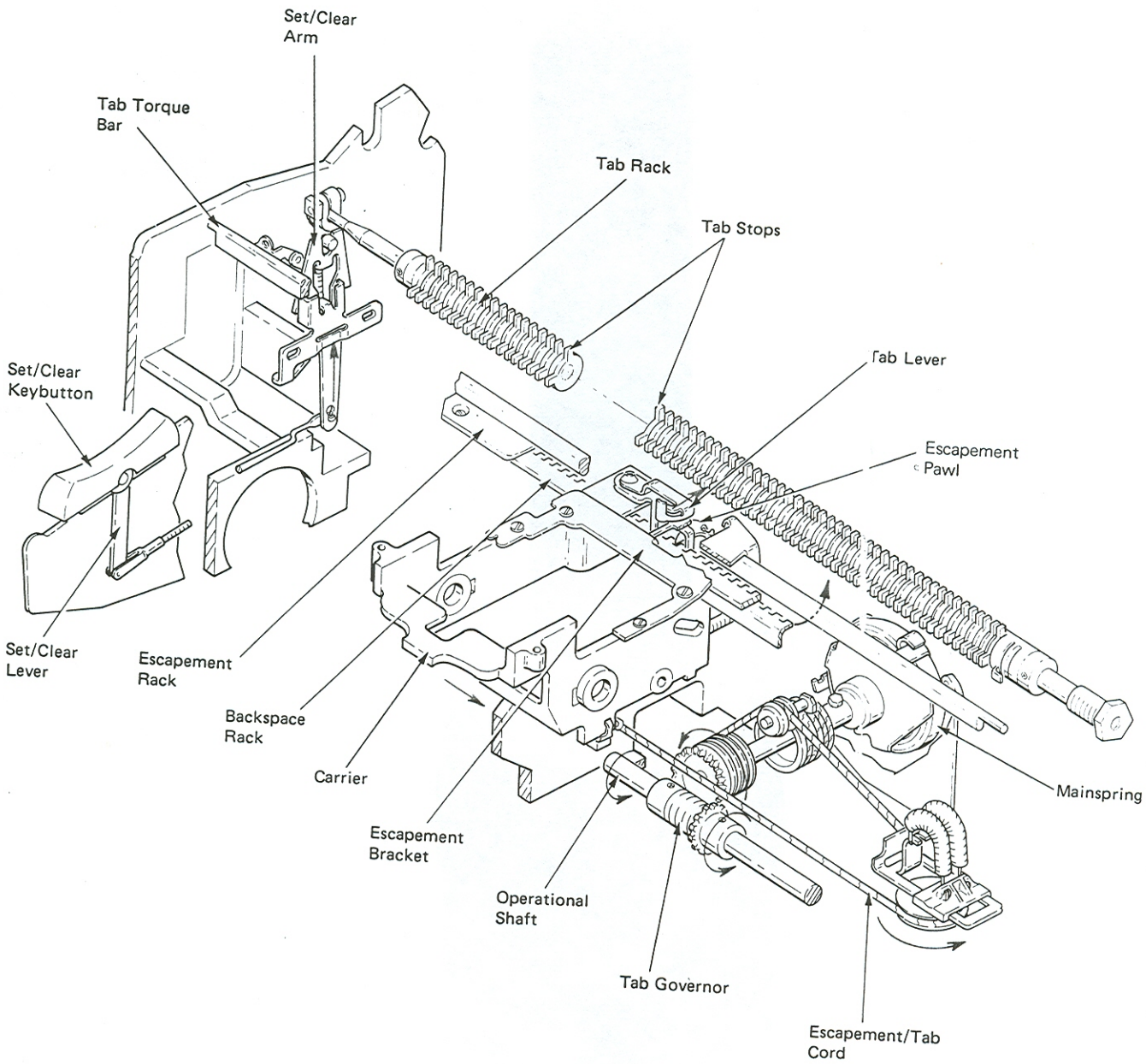

Figure 1 – Tab Mechanism

TAB SET AND CLEAR

The tab set/clear button is located at the left side of the keyboard (Figure 2). A set and clear link extends toward the rear from the set/clear keybutton and is connected to the tab set/clear arm. The tab set/clear arm is mounted on a bracket in such a way that it will toggle front or rear at the top. The tab set/clear bellcrank is mounted on the left end of the tab rack and its lower extension fits into a notch in the top of the tab set/clear arm.

When the set/clear keybutton is depressed, motion is transferred through the set and clear link, the tab set/clear arm, and the set/clear bellcrank to rotate the tab rack.

The tab rack is located parallel to and just to the rear of the escapement rack (Figure 2). Tab stops operate in slots in the tab rack with one stop for each escapement position. By rotating the tab rack, one tab stop is forced into contact with either the escapement bracket extension or the gang clear bracket. This motion rotates the tab stop within the rack to the set or clear position.

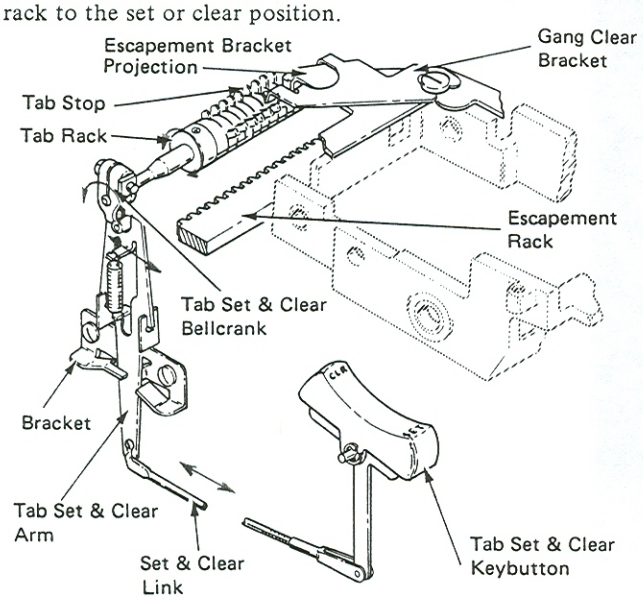

Figure 2 – Tab Set & Clear Mechanism

TAB SET

As the tab rack is rotated in the set direction (Figure 3), a tab stop at that carrier position contacts the extension on the escapement bracket and the tab stop is rotated within the tab rack.

When the tab set button is released, the tab rack restores to its rest position. The working surface of that tab stop will now be lower than the other tab stops, or in the "set" position.

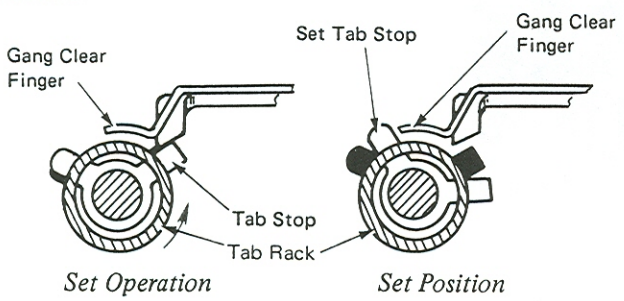

Figure 3 – Tab Set Operation (Left Side View)

TAB CLEAR

The set tab stop may be cleared by depressing the rear of the tab set/clear keybutton, which rotates the tab rack in the opposite direction (Figure 4). As the tab rack is rotated, the set tab stop will contact the gang clear finger and be rotated within the rack to its cleared position.

Tab stops may be cleared one by one or gang cleared. To gang clear, the carrier is positioned to the far right of the writing line, the tab clear keybutton is held depressed, and a carrier return operation is started. The set tab stops are moved back to their rest position by the gang clear finger as the carrier is returned to the left-hand margin.

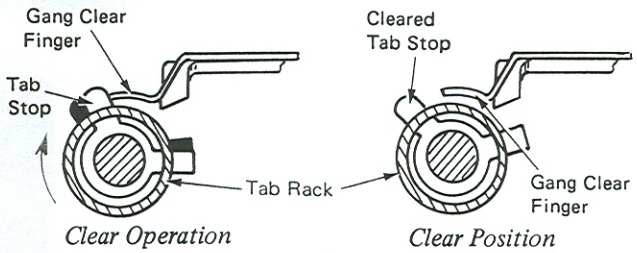

Figure 4 – Tab Clear Operation (Left Side View)

TAB ACTUATING

The tab mechanism is activated by depressing the tab keybutton, located at the upper left corner of the keyboard. As the keylever pivots on its fulcrum rod, the lower extension of the keylever moves to the rear (Figure 5). This extension is connected to the tab bellcrank by the tab keylever link. The tab bellcrank is connected to an arm on the tab torque bar by the tab torque bar link. The tab torque bar is mounted parallel to the print shaft at the rear of the carrier. Depressing the keylever will cause the bottom of the tab torque bar to pivot to the rear. The torque bar will remain pivoted to the rear until the keylever is released.

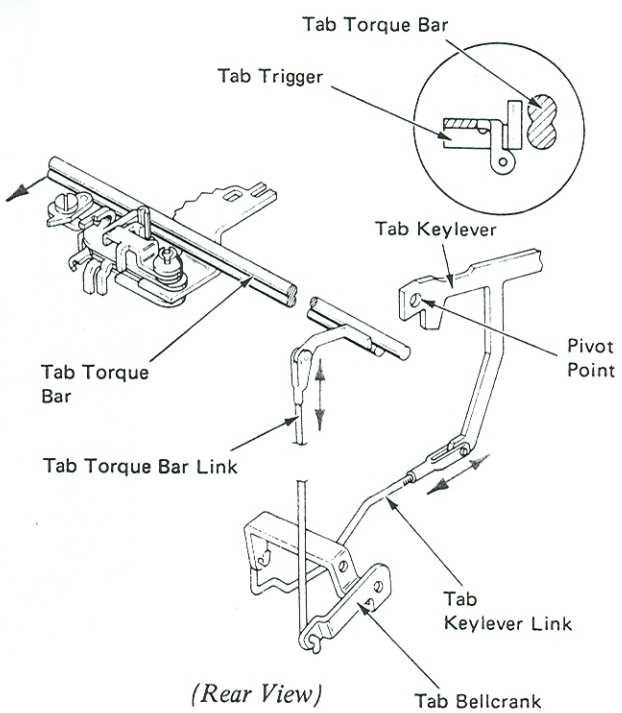

Figure 5 – Tab Actuating

TAB LEVER OPERATION

Pawl removal begins when the torque bar pushes against the tab trigger. The lower lug of the tab lever trigger pushes the tab lever to the rear (Figure 6).

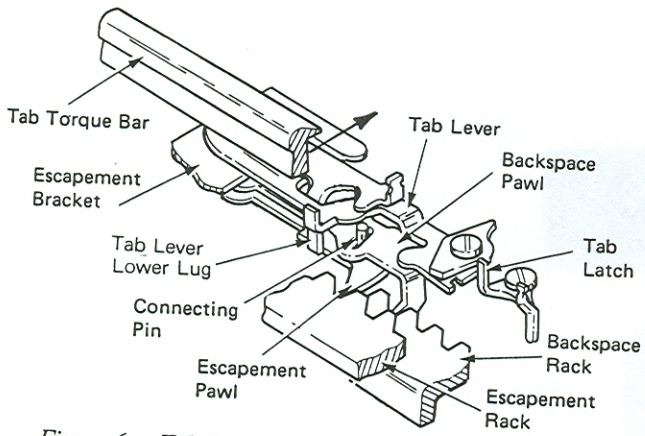

Figure 6 – Tab Lever Operation (Right Front View)

As the tab lever is moved to the rear, its lower lug contacts the backspace and escapement pawls and moves them to the rear out of their racks (Figure 7). When the escapement pawl just clears its rack, it is pulled to the right by the pawl spring. The backspace pawl will move up to the right an equal amount because of the stud connection between the escapement pawl and the backspace pawl.

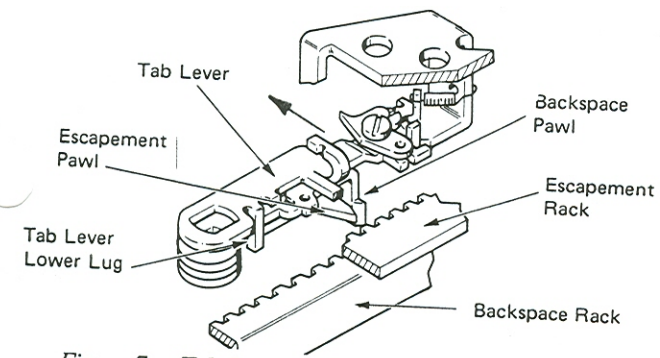

Figure 7 – Tab Lever Operation (Left Front View)

TAB LATCHING

As soon as the escapement and backspace pawls are removed from their racks, the carrier will be allowed to move to the right under mainspring tension.

As the tab lever continues to move to the rear, the tab lever latch engages a notch in the tab lever to latch the mechanism in its operated position, and to prevent the tab lever from overthrowing into the tab rack. With the tab lever latched, the tab pawl (mounted on the tab lever) is now in a position to contact the next set tab stop as the carrier moves to the right (Figure 8).

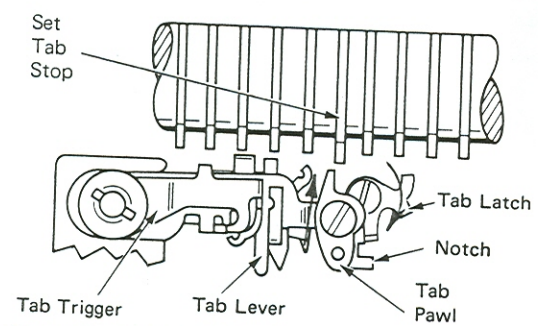

Figure 8 – Tab Latching Operation (Top View)

EARLY LEVEL MACHINES

As the pawls move to the right, they are also moved further to the rear by the tab lever. The tab lever will continue to be moved by the trigger until the trigger is limited by the tab overthrow stop. When the keybutton is released, the tab lever will be held to the rear by the tab lever latch (Figure 9).

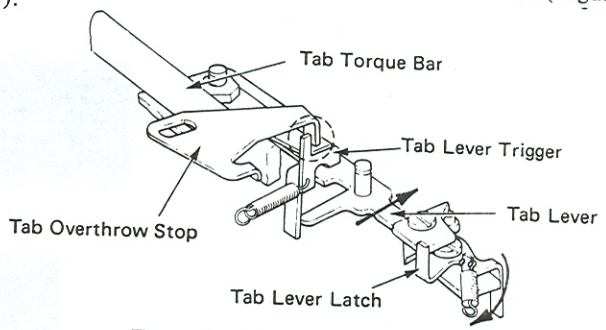

Figure 9 – Tab Overthrow Stop

TAB GOVERNOR

The carrier speed during a tab operation is controlled to prevent parts breakage or bouncing to the wrong position. The tab governor controls the carrier speed by limiting the speed at which the mainspring tension can turn the escapement cord drum to wind up the tab/escapement cord (Figure 10).

The gear of the escapement cord drum engages with the tab governor pinion gear. The governor pinion gear mounts on the operational shaft between two collars that are attached by setscrews to the operational shaft. The left collar and the pinion gear have hubs that are connected by a clutch spring. The clutch spring is wound so that it slips when the pinion gear is held still and the operational shaft is turning (Figure 10).

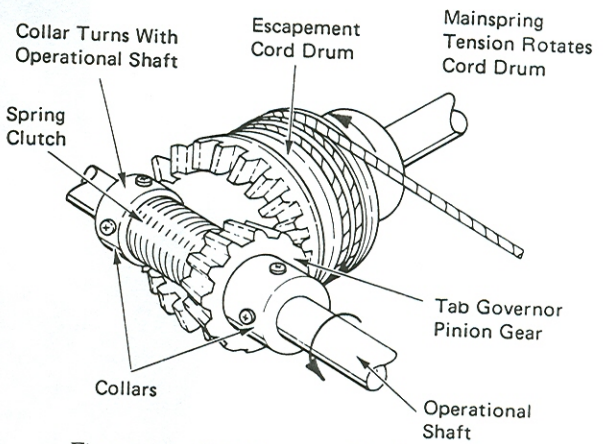

Figure 10 – Tab Governor Mechanism

During a tab operation, the escapement cord drum rotates the tab pinion gear in the same direction as the operational shaft. As soon as the rotational speed of the pinion gear tries to moves faster than the operational shaft, the clutch spring tightens around the two hubs, locking the pinion gear and the collar together. Since the collar is attached to the operational shaft, the speed of the escapement cord drum will be limited to the speed of the operational shaft.

TAB UNLATCHING

As the carrier moves to the right, the tab lever pawl contacts a set tab stop and the tab lever stops moving. However, the carrier and pawls will continue moving to the right because of the elongated mounting hole in the tab lever. Continued movement of the carrier and pawls past the stopped tab lever will cause the escapement pawl to slide off the lug on the escapement lever. The escapement pawl will then be free to restore back into the rack under its spring load. The backspace pawl does not have a notch, so it will remain held by the escapement lever lug (Figure 11).

Further movement of the carrier will cause the tab lever to slip off its latch. When the tab lever restores, it will allow the backspace pawl to reenter its rack. Although all parts have been unlatched and restored to their rest positions, the carrier has not stopped. When the escapement pawl was released from its rack, its spring tension held the escapement pawl fully extended to the right in its elongated mounting hole, and against the left side of the pawl mounting stud. After the escapement pawl enters the rack, its movement to the right is stopped by a rack tooth. The carrier continues to move to the right until the pawl mounting stud contacts the right side of the elongated slot in the escapement pawl and stops.

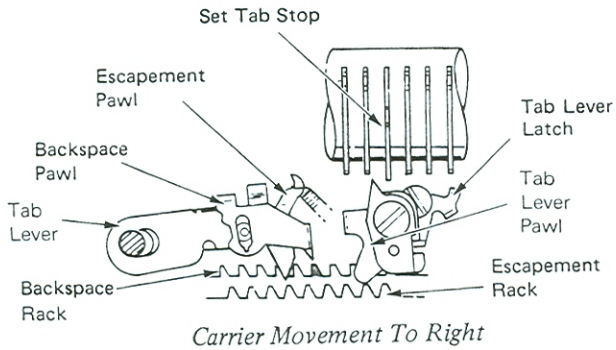

Carrier Movement To Right

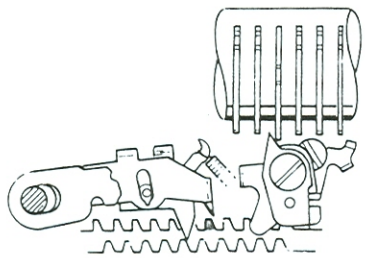

Tab Lever Pawl Contacts Tab Stop

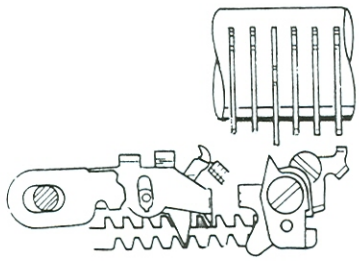

Carrier Stopped By Escapement Pawl

Figure 11 – Tab Unlatching Operation (Top View)

TAB TRIGGER

The function of the tab trigger is to allow the tab lever to restore at the end of a tab operation if THE TAB KEY-BUTTON IS STILL HELD DEPRESSED BY THE OPERATOR. The tab lever and tab trigger are designed so that when the tab lever is moved to the left after contacting a set tab stop, it will slide off the trigger lug which was holding it to the rear. With the trigger no longer holding the tab lever out, it is free to restore. When the tab keybutton is released, the tab trigger will restore to its rest position. At this time, the tab lever will move quickly to the right under spring load, resetting the tab lever behind the tab trigger lug.

Also, the tab lever moving to the right will reset its lug in front of the escapement pawl in a position to move it out of the rack on the next tab operation (Figure 12).

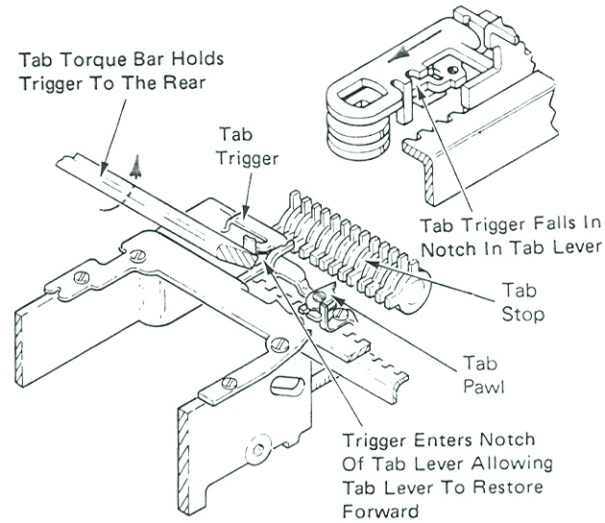

Figure 12 – Tab Lever Trigger Operation

TAB INTERLOCK

The tab interlock prevents the tab lever from being latched to the rear during a carrier return operation. If the tab lever were allowed to latch, the tab lever pawl could strike the right side of a set tab stop during a carrier return operation and lock the carrier. To prevent this from happening, the tab lever latch has a lower lug extending behind the escapement torque bar. When the escapement torque bar is pivoted, the tab lever latch will be rotated out of its latching position, preventing the tab lever from being latched out. The escapement torque bar pivots during a carrier return operation, spacebar operation, or print escapement operation (Figure 13).

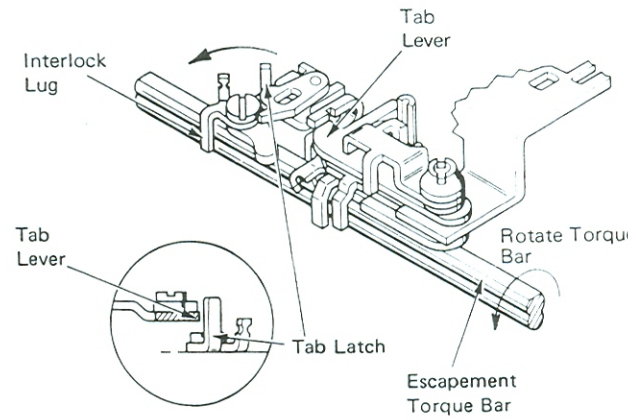

(Rear View)

Figure 13 – Tab Interlock

CARRIER RETURN/TAB INTERLOCK

The carrier return tab interlock allows a tab operation to go before or unlatch a carrier return operation after the carrier return operation has begun. Pressing the tab keybutton during a carrier return operation will pivot the tab torque bar to the rear so that a lug on its right end will pivot the carrier return/tab interlock extension of the carrier return latch keeper. When the carrier return/tab interlock lever is pivoted by the torque bar, the extension will unlatch the carrier return (Figure 14).

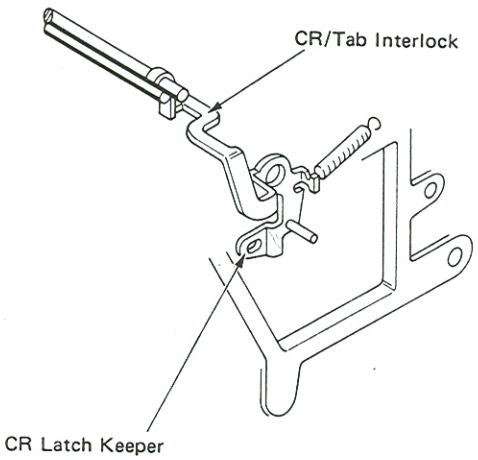

Figure 14 – Carrier Return/Tab Interlock (Right Front View)

TABULATION (NRB/S) ADJUSTMENTS

1. *Tab Rack Radially* –

   a. Position all the tab stops (except the final stop) to the rear of their slots to get .005"-.010" (0.13-0.25 mm) between the stops and tab rack.

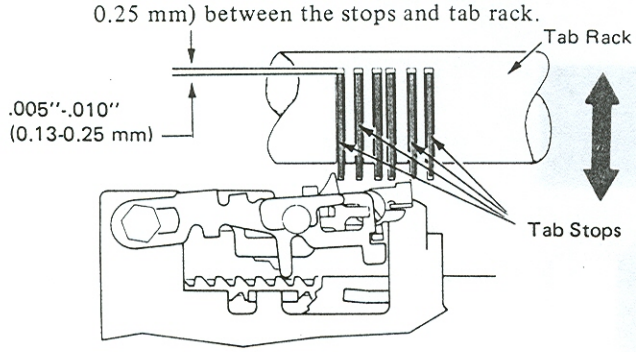

   b. Latch out the tab lever. Rotate the tab rack within the tab set and clear bellcrank for .030"-.040" (0.76-1.02 mm) between the tab stops and the tab lever pawl.

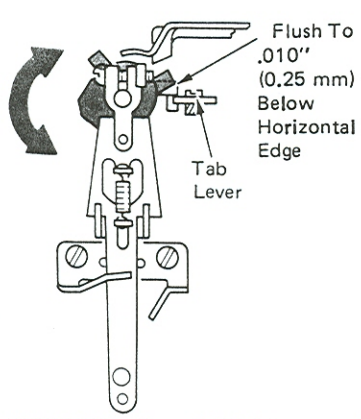

(NRB/S Pre-Snap In Tab)

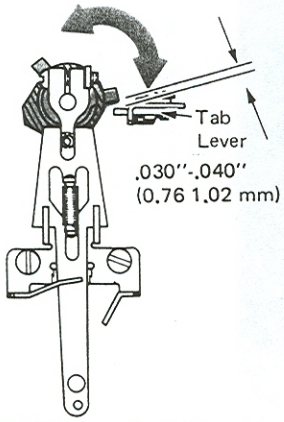

(NRB/S Snap In Tab)

2. *Tab Lever Stop* – Form the stop front-to-rear for a clearance of .001"-.003" (0.03-0.08 mm) between the vertical lug on the tab lever and the backspace pawl when the pawl is bottomed in its rack.

   NOTE: Make sure all escapement bracket and print escapement adjustments are correct before forming this stop.

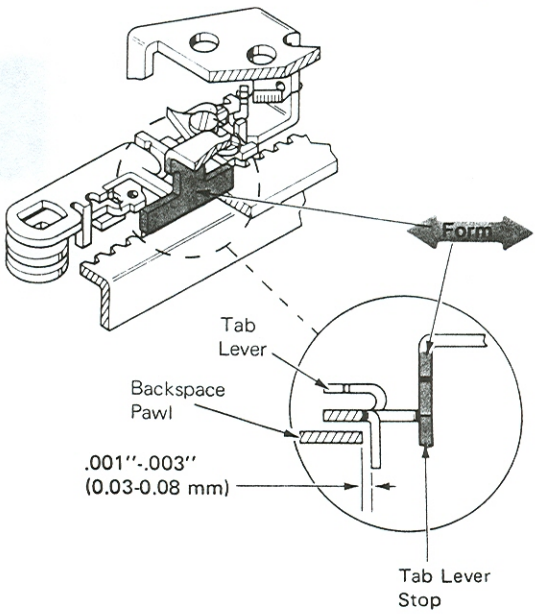

3. *Tab Lever Pawl* – Adjust the tab lever pawl front to rear for .035"-.045" (0.89-1.14 mm) clearance between the tip of the tab lever pawl at rest and the set tab stops. Make this adjustment with the carrier at the left side of the tab rack. The adjustment of the tab lever pawl has an effect on the amount of overlap between the tab stop and the pawl tip in the active position.

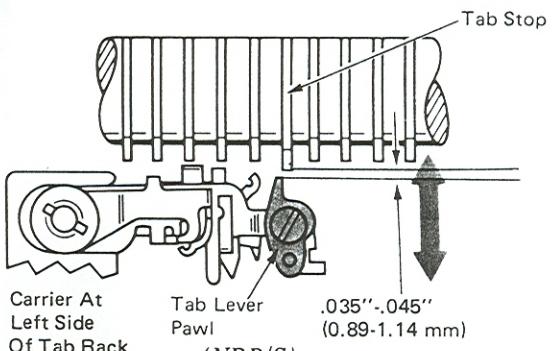

(NRB/S)

4. *Tab Rack Parallel* – Adjust the tab rack mounting bracket front to rear to get .035"-.045" (0.89-1.14 mm) clearance between the tip of the tab lever pawl at rest and the set tab stops. Make this adjustment with the carrier at the right side of the tab rack.

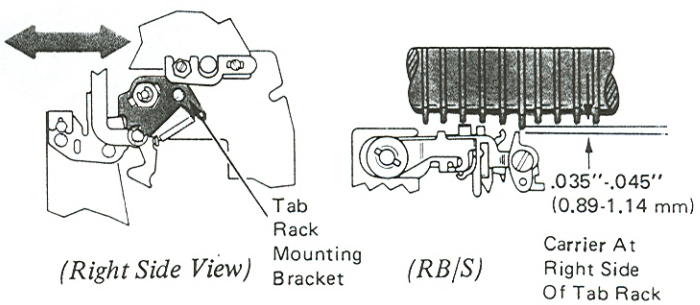

(Right Side View) *(RB/S)*

5. *Pawl Clearance* – Form the lug on the tab latch for a clearance of .005"-.015" (0.13-0.38 mm) between the tip of the escapement pawl and escapement rack teeth, with the tab lever latched to the rear. This adjustment ensures that the escapement pawl will enter the rack as quickly as possible to reduce the possibility of entering the wrong tooth.

The lug of the tab latch may be formed with the three-inch screwdriver by using it as a lever through the hole in the escapement bracket.

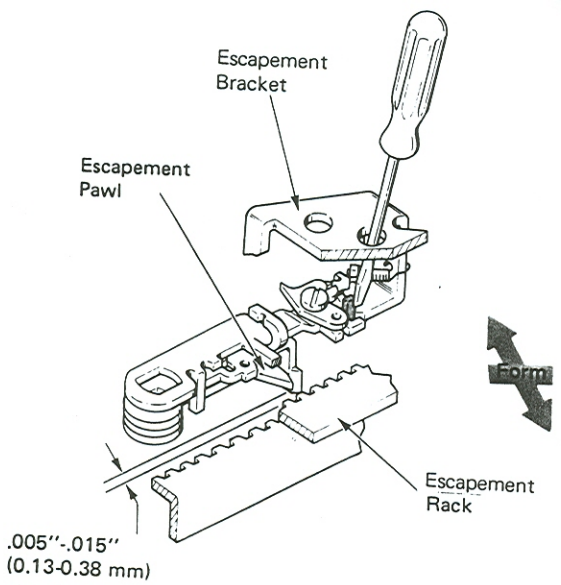

6. *Keylever Link* – Adjust the link on the tab keylever extension so that the rear arm of the tab bellcrank rests approximately 1/8" (3.18 mm) above the bottom frame.

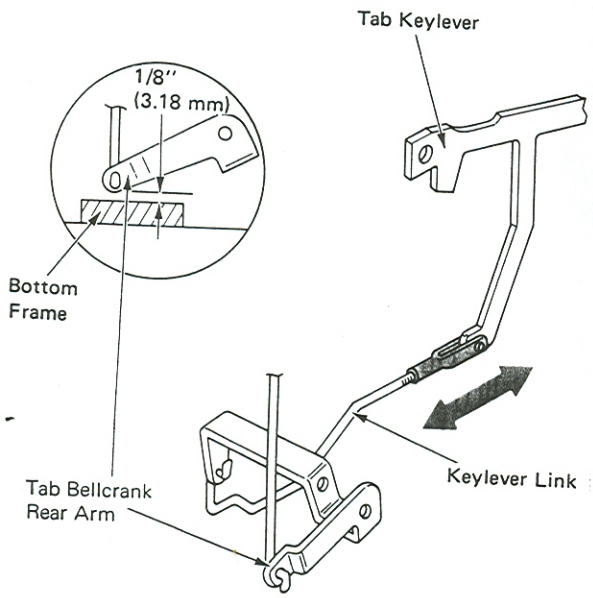

(Left Rear View)

7. *Tab Torque Bar Link* – Adjust the tab torque bar link for a clearance of .001"-.006" (0.03-0.15 mm) between the tab torque bar and the tab lever trigger at rest.

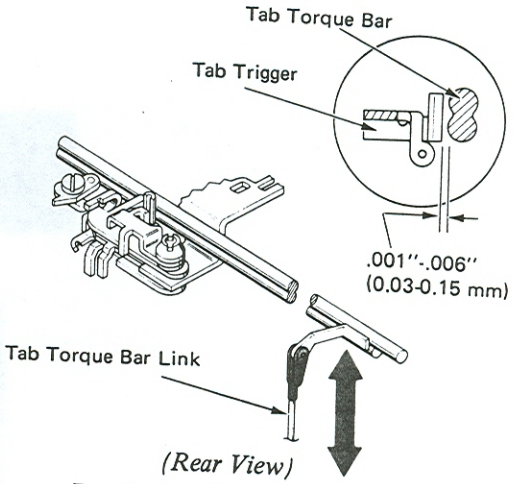

(Rear View)

8. *Tab Lever Overthrow Stop (Level 1)* – Adjust the tab lever overthrow stop front or rear so that .005"-.015" (0.13-0.38 mm) clearance exists between the lug of the tab lever trigger and the overthrow stop, when the tab lever is latched to the rear.

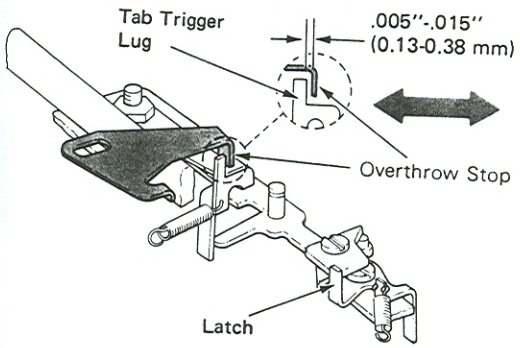

(Front View)
(Latched Position)

9. *Tab Rack Left To Right* – Adjust the tab rack left to right for .005"-.020" (0.13-0.51 mm) clearance between the tip of the tab lever pawl and the left side of a set tab stop.

To make this adjustment, clear all the tab stops. Set one tab stop, backspace one time, and then turn the machine off. The tip of the tab lever pawl should be just to the left of the tab stop. Hold the carrier to prevent it from moving, and observe the tab lever pawl as you slowly depress the tab keybutton. The tip of the tab lever pawl should clear the left side of the tab stop by .005"-.020" (0.13-0.51 mm)

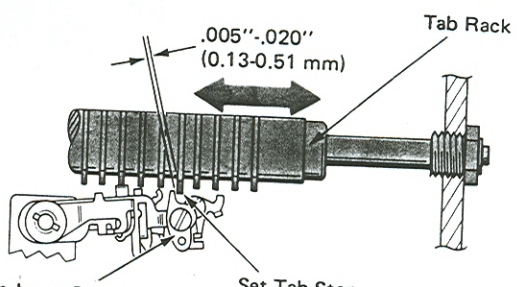

(Top View)

10. *Tab Interlock* – Form the lug on the tab latch that extends down behind the escapement torque bar so that the escapement torque bar rotates the tab latch away from the tab lever by .005"-.025" (0.13-0.64 mm). Make this adjustment with the carrier return clutch latched.

The adjustment ensures that the carrier return and tab cannot both be latched out at the same time. If both were allowed to latch, the tab lever pawl would lock against a set tab stop during the carrier return operation.

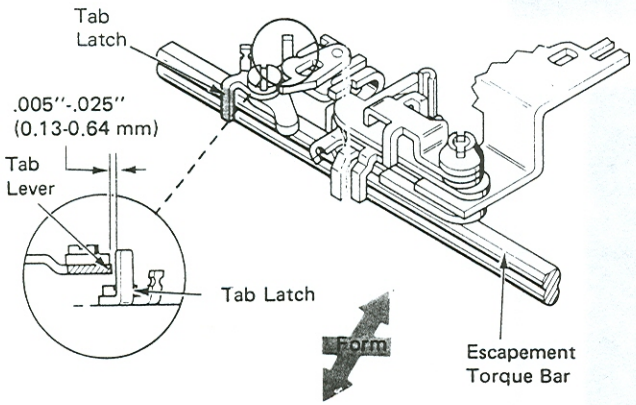

(Left Rear View)

11. *Carrier Return/Tab Interlock* –

Level 1 – Form the lug on the interlock to get the following conditions:

a. With the carrier return mechanism latched, the interlock should pull the carrier return latch keeper forward just enough to release the latch when the tab keylever is fully depressed.

b. With the carrier return mechanism at rest, depressing the tab keylever all the way down should not cause the carrier return keeper to move away from the latch (level 1 only).

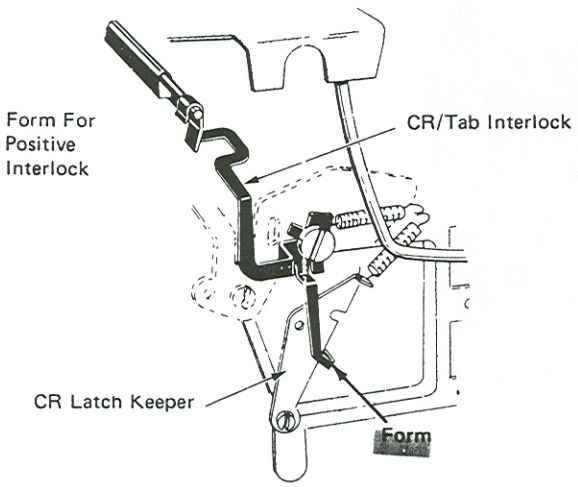

Level 1

Level 2 – With the tab keybutton held down, form the horizontal arm part of the carrier return interlock to get .010"-.020" (0.25-0.51 mm) between the carrier return latch and keeper.

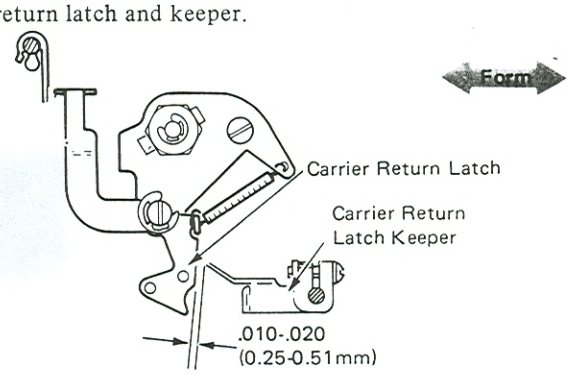

(Level 2)

12. *Tab Rack Vertical* – Adjust the tab rack mounting bracket up or down to get .010"-.020" (0.25-0.51 mm) clearance between the tab rack and the tab clear finger. Check for this condition with the carrier at each end of the tab rack.

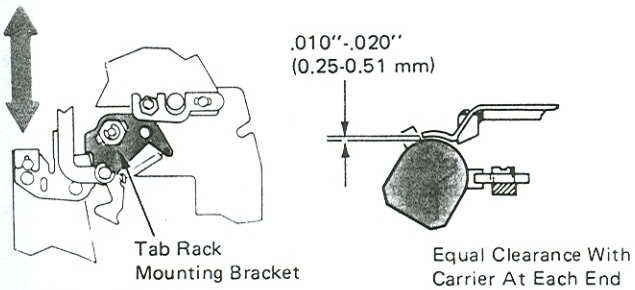

(Right Side View)

NOTE: Check to make sure the tab rack left-to-right and tab rack parallel adjustments are correct after making this adjustment.

13. *Tab Set Lug* – Form the stop lug on the tab set and clear bracket so that when a tab stop is set, the top of the tab lever pawl will be aligned with the top of a set tab stop.

If the tab stops, located on either side of the tab stop that is being set, contact the bottom of the tab clear bracket before the proper set position is gotten, the tab set finger at the rear of the escapement bracket should be formed down.

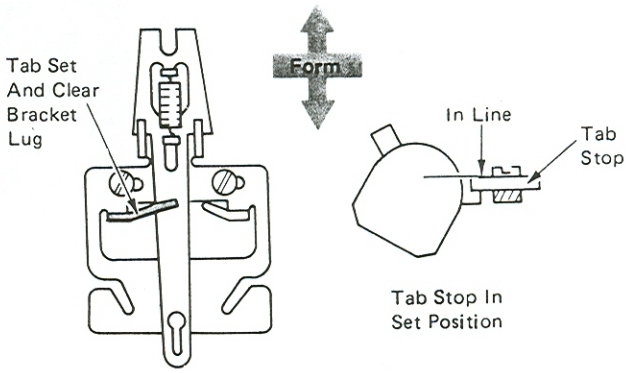

14. *Gang Clear Bracket* – The gang clear bracket should be adjusted front-to-rear for .010"-.020" (0.25-0.51 mm) clearance with the clear lug of a set tab stop. The clear bracket should be formed up or down for .010"-.020" (0.25-0.51 mm) clearance with the tab rack.

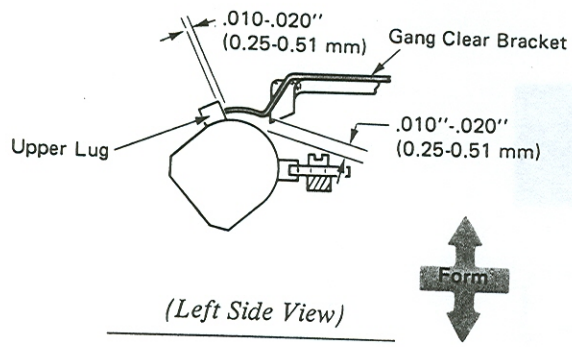

(Left Side View)

15. *Tab Clear Lug* – With the tab stops at the rear of their slots, form the stop lug so that the gang clear bracket will clear the upper lug on the tab stop by .001"-.010" (0.03-0.25 mm) when the tab clear is operated.

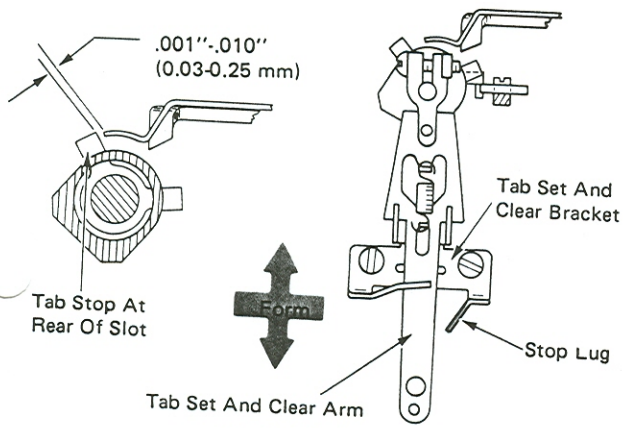

(Left Side View)

16. *Tab Set And Clear Link* – Adjust the tab set and clear link so the tab set and clear keybutton matches the angle of the keyboard.

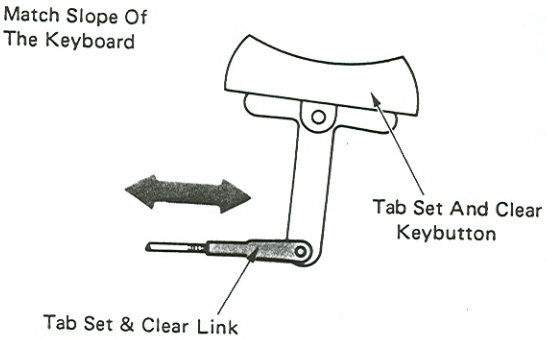

(Left Side View)

17. *Tab Pinion Backlash* – Adjust the tab governor assembly left or right to get .002"-.004" (0.05-0.10 mm) backlash between the tab pinion and the escapement cord drum gear. The pinion should have a minimum of end play between the tab governor hub and collar, yet still rotate freely. Check adjustment with power on.

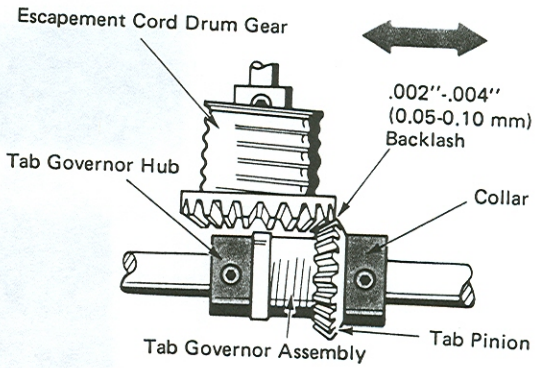

(Top View)

BLANK PAGE IN MANUAL FOR ADDING NOTES

TABULATION (RB/S) OPERATIONAL THEORY

The tab mechanism on RB/S machines can operate with either 10 or 12 pitch using the same parts. This is because of a universal tab rack. The tab stops are spaced in such a way that the escapement pawl will re-enter the proper rack tooth correctly in either pitch (Figure 1).

The tab mechanism used in RB/S machines provides the operator with the same features as machines with NRB/S, but with two additional instructions:

1. The machine will not reliably tab from within one space of a set tab stop.
2. (Dual Pitch Only) Before switching pitch, all tab stops should be cleared and necessary tab stops reset after the pitch is changed.

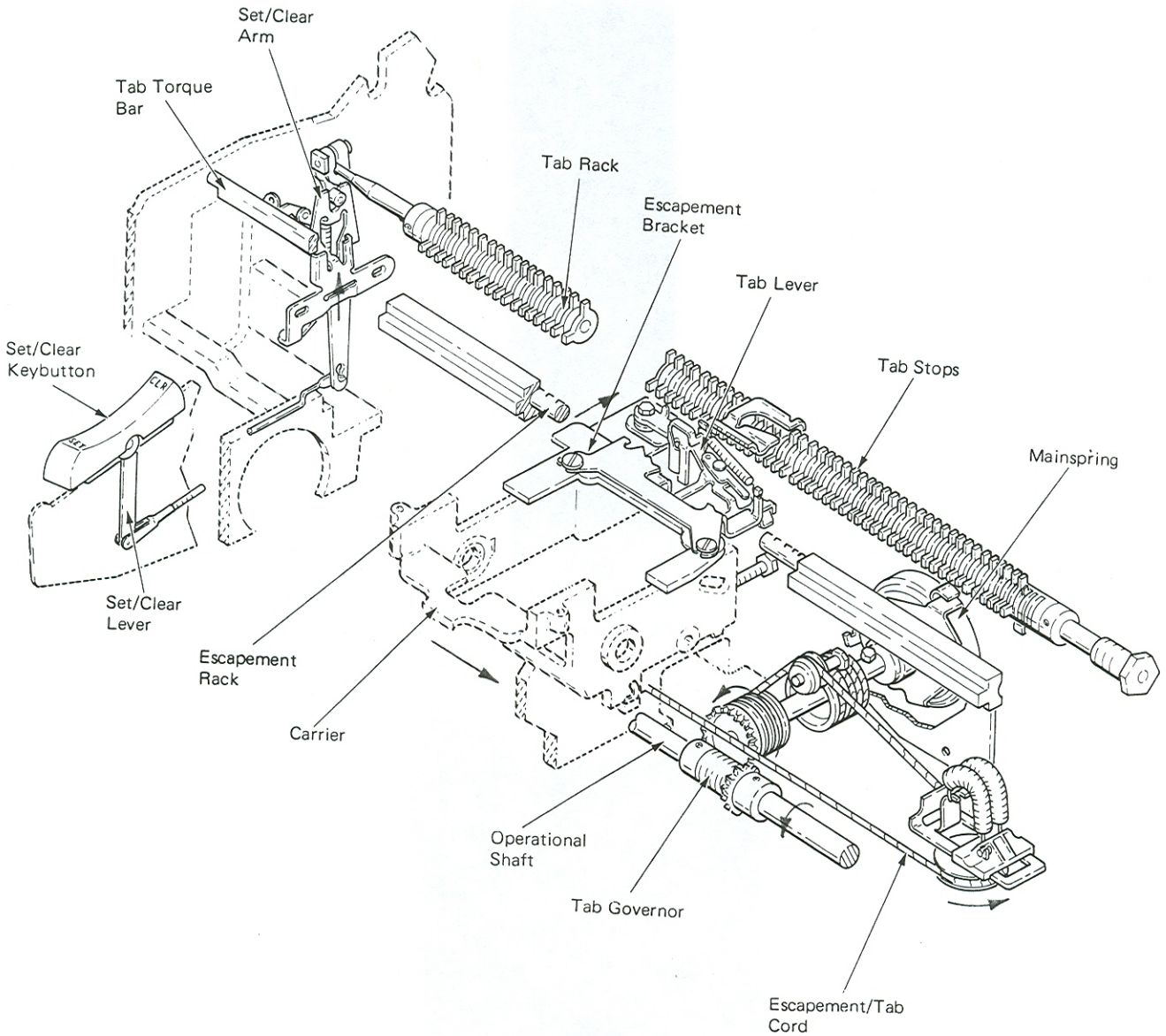

Figure 1 – Dual Pitch Tab

TAB SET AND CLEAR

The tab rack is rotated to set or clear a tab stop in the same way as NRB/S machines. However, the tab stops are both set and cleared by a lug on the tab set and clear bracket. On 10 pitch machines, and on dual pitch machines in the 10 pitch mode, the tab set and clear lug will set or clear the two closely spaced tab stops at the same time. On 12 pitch machines, and on dual pitch machines in the 12 pitch mode, it will set or clear them one at a time (Figure 2).

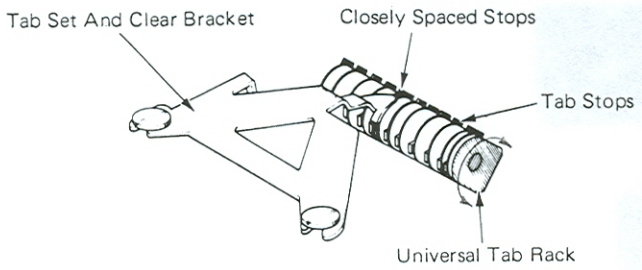

Figure 2 – Tab Set And Clear

TAB ACTUATING

The tab torque bar is pivoted to the rear in the same way as a NRB/S "Selectric" Typewriter. The tab torque bar contacts the tab lever trigger, moving it to the rear. The tab lever trigger lug contacts the upper lug on the tab lever. As the tab lever moves to the rear, its lower lug contacts the escapement pawl, removing it from the escapement rack (Figure 3).

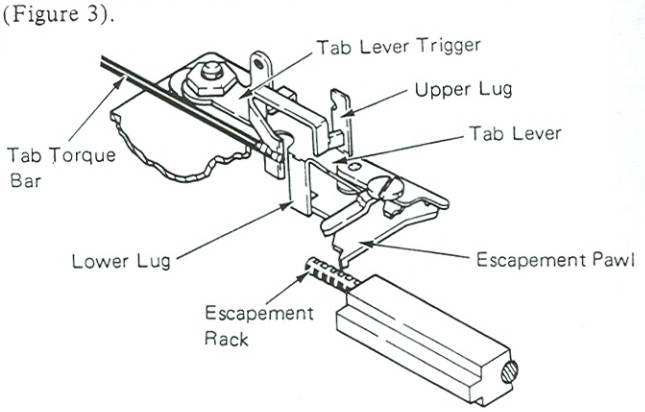

Figure 3 – Tab Actuating And Escpament Pawl Removal

The tab lever is latched by the latch lug of the tab latch, rotating into the latching notch. The rear edge of the notch acts as a latching surface for the tab lever. The front of the notch contacts the latch lug and acts as an overthrow stop for the tab lever. The interlock lug on the tab latch rests behind the escapement torque bar and will cause the tab to be unlatched any time the escapement torque bar is operated (Figure 4).

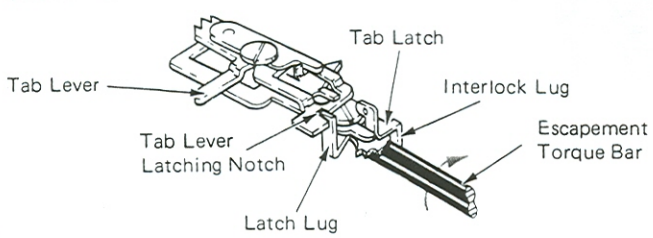

Figure 4 – Tab Lever Latching

The tab lever pawl is mounted to the tab lever by a shoulder screw. It pivots on the tab lever front-to-rear and is spring loaded toward the rear. This allows the tab lever to continue its rear movement even though the tab lever pawl contacts the end of a set tab stop. This will occur sometimes because of the universal tab stop spacing. A tab lever pawl adjusting plate is mounted to the tab lever, controlling the amount of tab lever pawl overlap on a set tab stop (Figure 5).

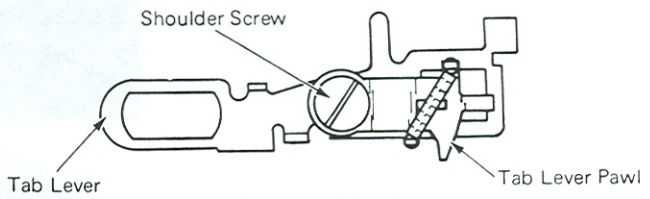

(Bottom View)

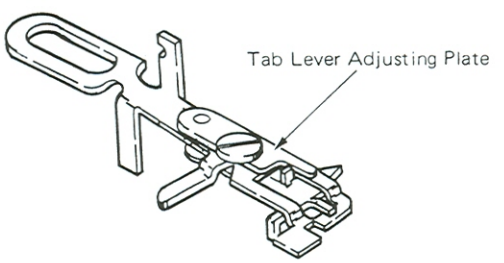

(Right Front View)

Figure 5 – Tab Lever Pawl Mounting

When the tab lever is latched out, the escapement pawl is removed from the escapement rack and the carrier moves to the right. The tab lever pawl contacts a set tab stop, causing the tab lever to stop as the carrier continues to move to the right. After .020" (0.51 mm) of additional movement of the carrier, the escapement pawl drops from the lower lug on the tab lever and, under its spring tension, restores back into the escapement rack. Further movement of the carrier causes the tab lever to unlatch and restore to its rest position. The escapement pawl against the escapement rack tooth stops the carrier (Figure 6).

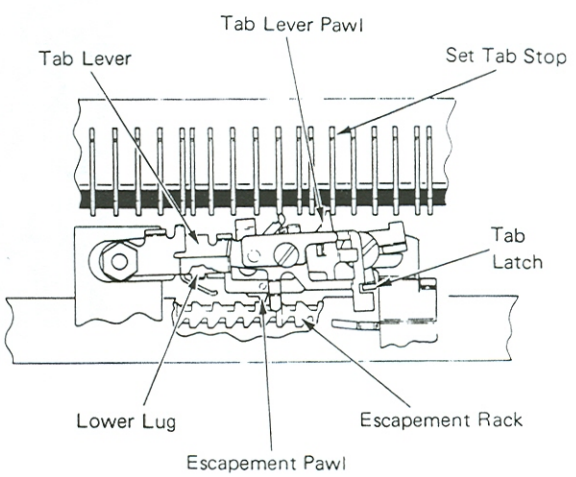

(Top View – Latched Position)

Figure 6 – Tab Operation

UNIVERSAL TAB STOP SPACING

The tab stops are spaced on the universal tab rack to work with both 10 and 12 pitch escapement racks. Figure 7 shows the tab lever pawl contacting a tab stop, if it were and approximately where the escapement pawl starts to ...r the escapement rack tooth for that stop. Every 1/2 inch (5 teeth in 10 pitch and 6 teeth in 12 pitch) an escapement rack tooth is common for both pitches; therefore, the tab stop spacing is repeated every 1/2 inch (Figure 7).

This is shown for example only. Keep in mind that the machine will not tab reliably from within one space of a set tab stop.

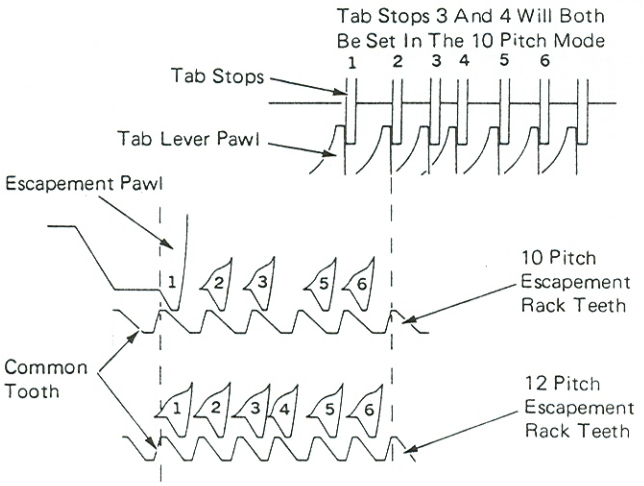

Figure 7 – Universal Tab Stop Spacing

ESCAPEMENT (RB/S)

In the RB/S escapement mechanism, the vertical position of the escapement pawl is critical. The pawl must be centered in the escapement rack within the opening in the escapement rail. An escapement pawl guide bracket is mounted above the escapement pawl. The escapement pawl guide lug extends down from the bracket and is formed under the escapement pawl to control its vertical movement. The escapement pawl vertical position is controlled by the vertical position of the rear of the carrier, which is adjustable. A diagonal mounting slot in the rear carrier shoe provides the adjustment. As the carrier shoe is adjusted left or right, the rear of the carrier is raised or lowered (Figure 8).

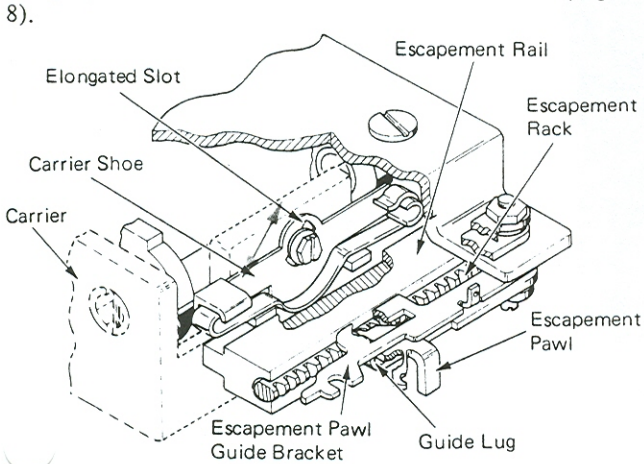

Figure 8 – Escapement Pawl And Carrier Shoe Mounting (Right Rear View)

TABULATION (RB/S) ADJUSTMENTS

1. Tab Rack Radially –

a. Position all the tab stops (except the final stop) to the rear of their slots to get .005"-.010" (0.13-0.25 mm) between the stops and the tab rack.

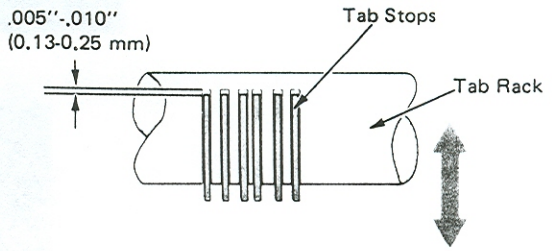

b. Latch out the tab lever. Rotate the tab rack within the tab set and clear bellcrank for .030"-.040" (0.76-1.02 mm) between the tab stops and the tab lever pawl.

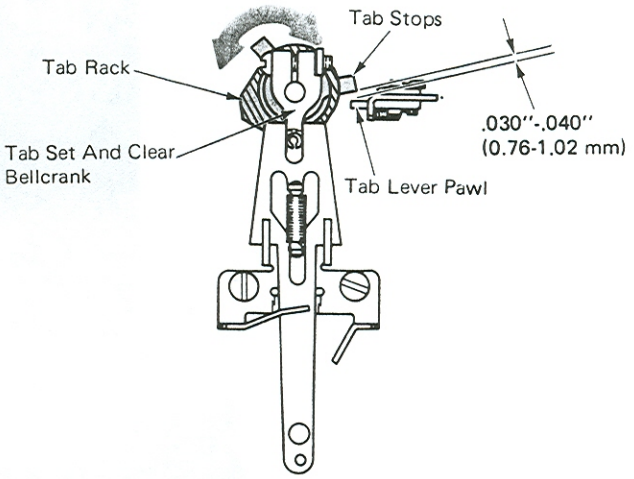

(Left Side View)

2. Tab Lever Stop – Form the tab lever stop on the escapement bracket so the lower tab lever lug clears the escapement pawl by .010"-.015" (0.25-0.38 mm) at rest.

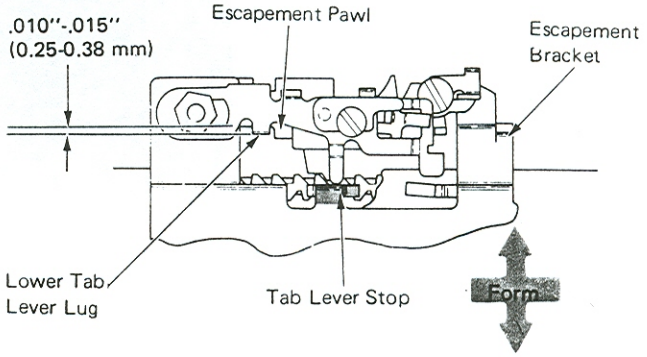

(Top View)

3. *Tab Lever Pawl* – Adjust the tab lever pawl adjusting plate so the tab lever pawl engages a set tab stop by .035"-.045" (0.89-1.14 mm) with the carrier at the left side of the tab rack and the tab lever latched out.

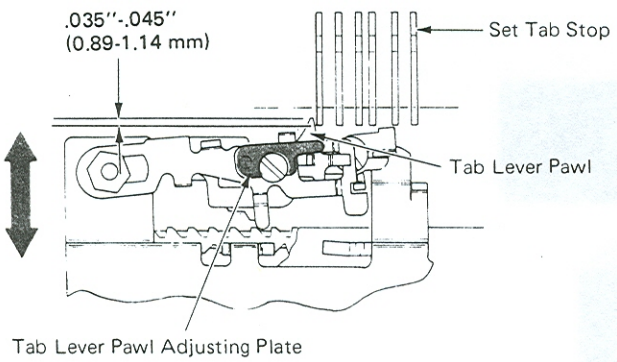

(Top View)

4. *Tab Rack Parallel* – Adjust the tab rack mounting bracket front to rear so that the tab lever pawl engages a set tab stop by .035"-.045" (0.89-1.14 mm) with the carrier at the right side of the tab rack and the tab lever latched out.

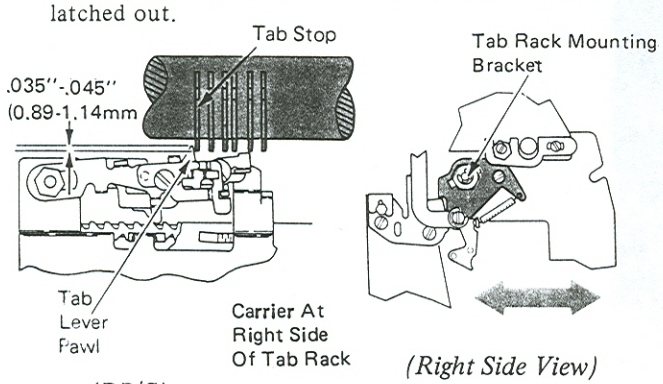

(RB/S) *(Right Side View)*

5. *Tab Latch Overlap* – With the tab lever latched out, adjust the escapement pawl guide bracket front to rear so the left edge of the tab latch lug clears the bottom of the latching slot in the tab lever by .001"-.010" (0.03-0.25 mm).

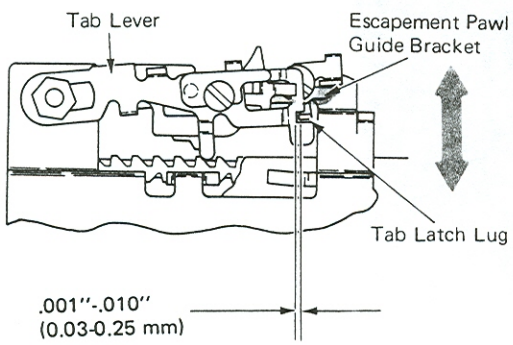

(Top View)

6. *Escapement Pawl Clearance* – With the tab lever latched out, form the tab latch lug so the escapement pawl clears the escapement rack by .005"-.010" (0.13-0.25 mm).

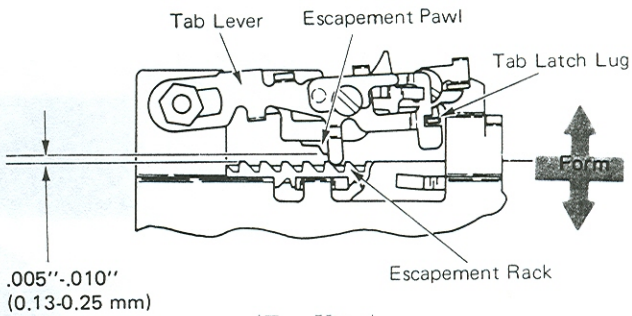

(Top View)

7. *Tab Keylever Link* – Adjust the tab keylever link so that when the tab keylever is bottomed, the tab lever overthrows the tab latch by .005"-.010" (0.13-0.25 mm).

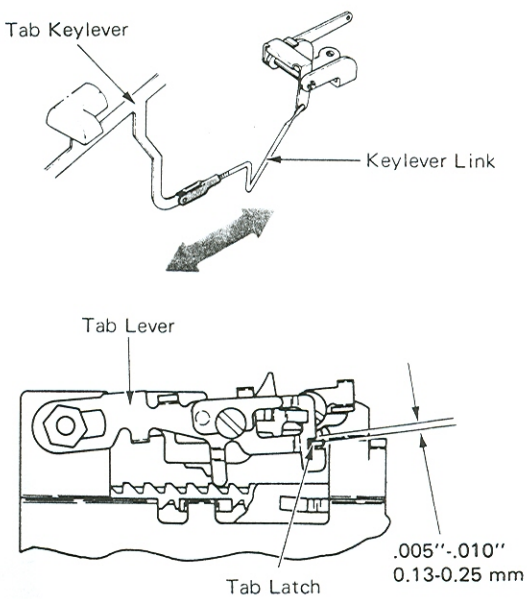

(Top View)

8. *Tab Torque Bar Link (Level 1)* – Adjust the torque bar link so the tab torque bar rest position is vertical.

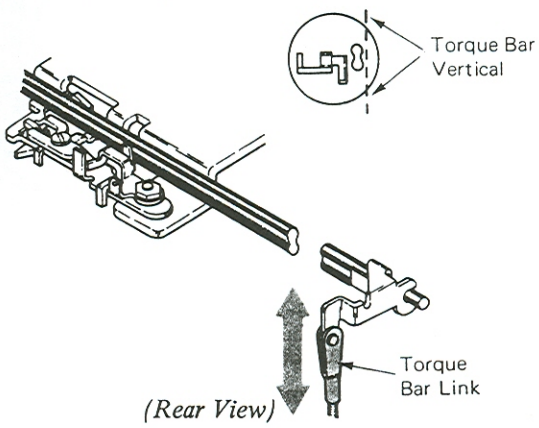

(Rear View)

Tab Torque Bar Link (Level 2) – Disconnect the tab keylever link. Adjust the tab torque bar link so the torque bar arm clears the tab.

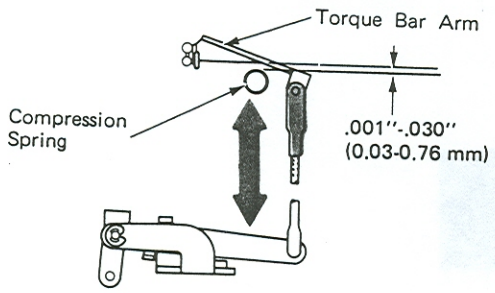

(Level 2) (Right Side View)

9. *Tab Torque Bar Backup Lug* – Form the tab torque bar backup lug for .001" (0.03 mm) clearance from the tab torque bar at the closest point.

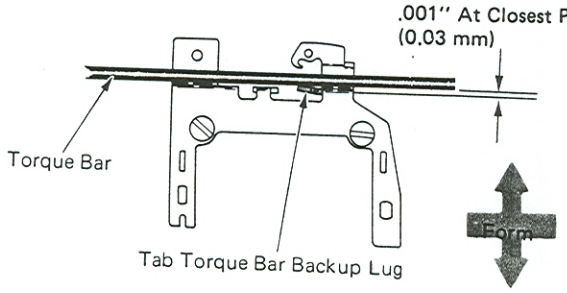

(Top View)

10. *Tab Trigger* – Form the front lug on the tab trigger so it clears the tab torque bar by .001"-.005" (0.03-0.13 mm).

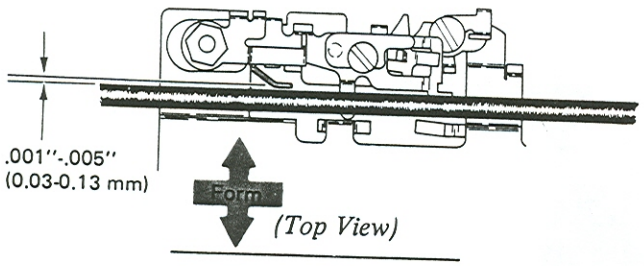

(Top View)

11. *Tab Keylever Down Stop* – With the tab keylever bottomed, adjust the tab keylever down stop so there is .005"-.010" (0.13-0.25 mm) clearance between the tab latch lug and the rear surface of the tab lever latching notch.

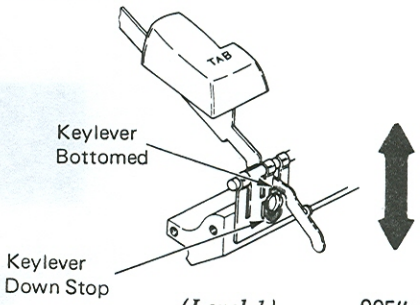

(Level 1)

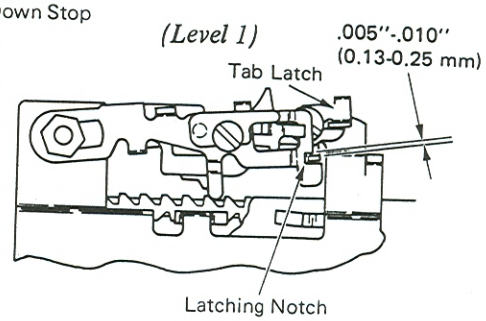

(Top View)

Level 2 – With the tab keylever bottomed, adjust the tab keylever link to get .005"-.010" (0.13-0.25 mm) clearance between the tab latch lug and the rear surface of the tab lever latching notch.

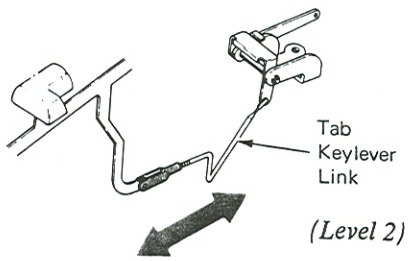

(Level 2)

12. *Tab Rack Left-To-Right* – Set the first tab stop and position the carrier at the far left (first escapement rack tooth). As the tab lever is moved to the rear, adjust the tab rack left to right so the tab lever pawl clears the set tab stop by .000"-.002" (0.00-0.05 mm). Dual pitch machines are to be adjusted in the 10 pitch mode.

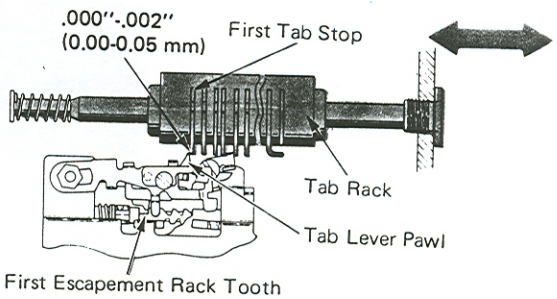

(Top View)

13. *Tab Interlock* – Form the lug on the tab latch that extends down behind the escapement torque bar so that the escapement torque bar rotates the tab latch away from the tab lever by .005"-.025" (0.13-0.64 mm). Make this adjustment with the carrier return clutch latched.

The adjustment ensures that the carrier return and tab cannot both be latched out at the same time. If both were allowed to latch, the tab lever pawl would lock against a set tab stop during the carrier return operation.

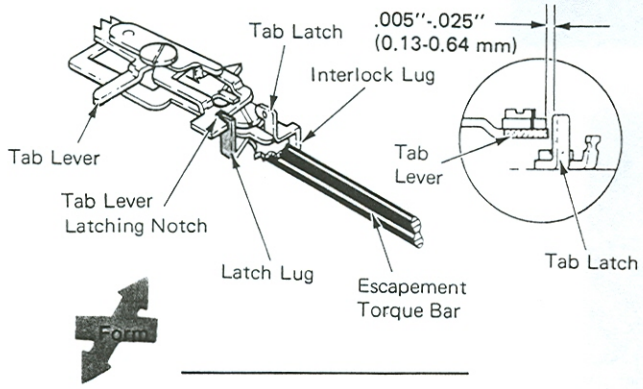

14. *Carrier Return/Tab Interlock* – Form the lug of the interlock to get the following conditions:

Level 1 –

a. With the carrier return mechanism latched, the interlock should pull the carrier return latch keeper forward just enough to release the latch when the tab lever is fully depressed.

b. With the carrier return mechanism at rest, the tab keylever should not cause the carrier return keeper to move away from the latch when the keylever is fully depressed.

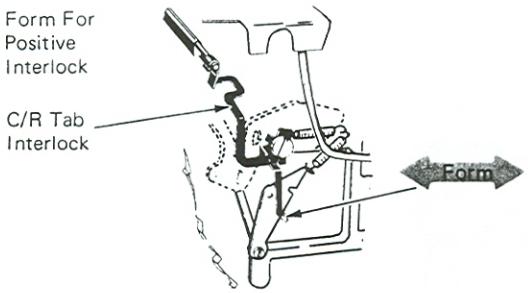

(Level 1)

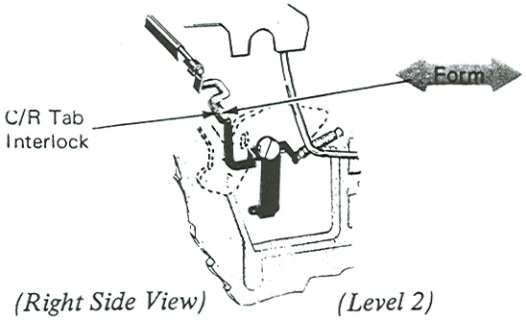

(Right Side View) *(Level 2)*

Level 2 – With the tab keybutton held down, form the horizontal arm part of the carrier return interlock to get .010"-.020" (0.25-0.51 mm) between the carrier return latch and keeper.

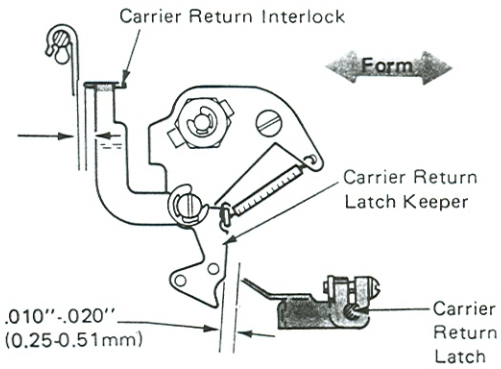

(Level 2)

15. *Tab Rack Vertical* – Adjust the tab rack mounting bracket up or down to get .005"-.015" (0.13-0.38 mm) clearance between the top of a tab stop and the bottom of the clear finger of the tab set and clear bracket.

NOTE: Check to make sure the tab rack left to right and tab rack parallel adjustments are correct after making this adjustment.

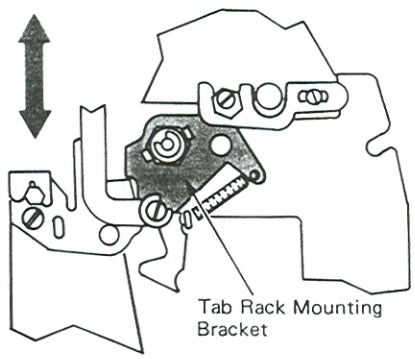

(Right Side View)

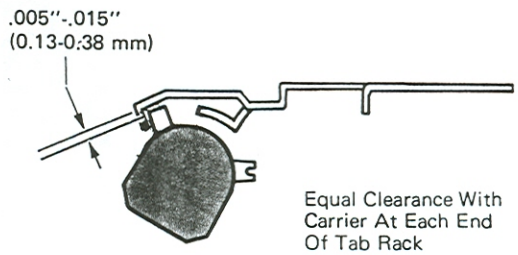

(Left Side View)

16. *Tab Set And Clear Bracket* – Adjust the tab set and clear bracket for the following conditions:

a. Adjust the tab set and clear bracket front to rear so the clear finger and a cleared tab stop will have .001"-.010" (0.03-0.25 mm). Form the clear finger up or down to get a .010"-.020" (0.25-0.51 mm) clearance between the clear finger and the tab rack. Adjust left to right so that the set finger will reliably set and clear each tab set stop when a dual pitch machine is in the 12 pitch mode or when adjusting a 12 pitch RB/S machine. Adjust left to right so that the set finger will set and clear the two stops that are spaced close together at the same time when a dual pitch machine is in the 10 pitch mode, or when adjusting a 10 pitch RB/S machine.

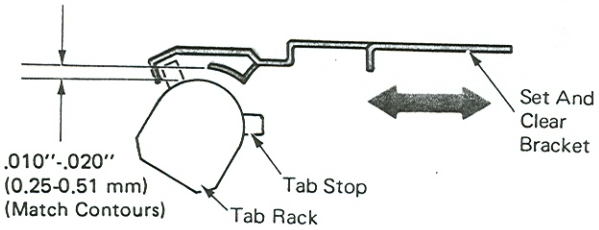

(Left Side View)

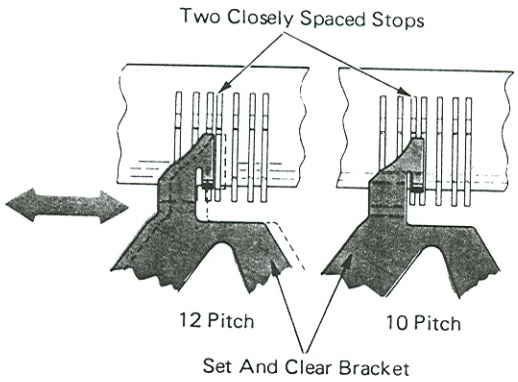

(Top View)

b. With the tab rack rotated in the clear position, form the set finger so that it clears the upper lug of a tab stop by .005"-.015" (0.13-0.38 mm) and the tip clears the rack by .001"-.010" (0.03-0.25 mm).

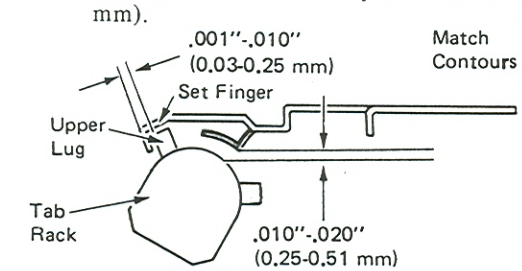

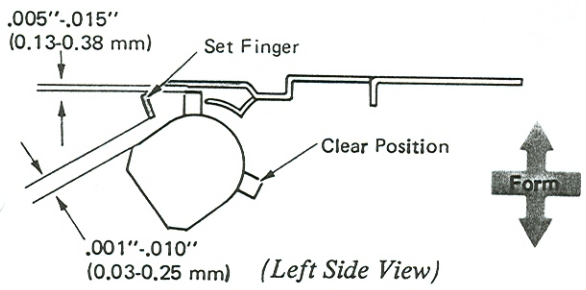

(Left Side View)

17. *Tab Set Stop Lug* – Form the set stop lug on the tab set and clear arm bracket so the top of the tab lever pawl engages the top of a tab stop when set.

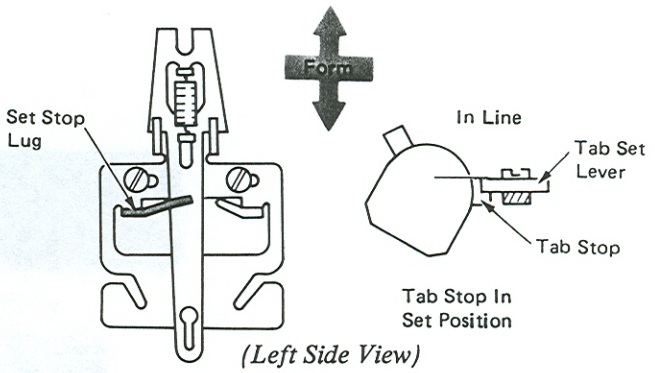

(Left Side View)

18. *Tab Clear Lug* – With the tab stops positioned .005"-.010" (0.13-0.25 mm) from the rear of their slots, form the clear stop lug of the tab set and clear arm bracket so the tab stops are .001"-.010" (0.03-0.25 mm) from the tab clear finger when the tab set and clear arm is against the lug. This ensures minimum noise during gang clear.

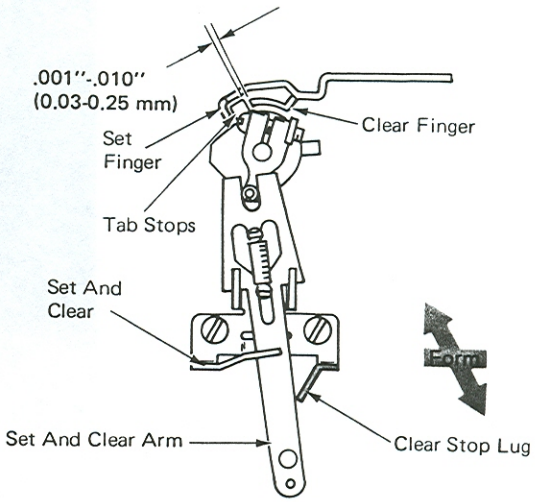

(Left Side View)

19. *Tab Set And Clear Link* – Adjust the tab set and clear link so the tab set and clear keybutton matches the angle of the keyboard.

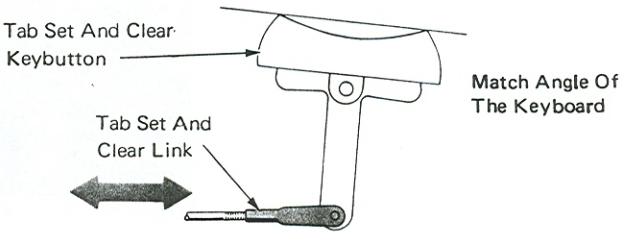

(Left Side View)

BLANK PAGE IN MANUAL FOR ADDING NOTES

PRINT OPERATIONAL THEORY

The purpose of the print mechanism is to cause the typehead to strike the paper after a character is selected. When the printer is cycled for a character selection/print operation, motion is transferred by the print shaft through the print cam, a cam follower and the rocker assembly to power the typehead toward the platen (Figure 1).

There are two basic conditions necessary for a correct print operation. They are: correct velocity of the typehead as it strikes the paper, and proper platen position.

Two levels of velocity may be selected on machines having the dual velocity feature. Alphanumeric characters receive the highest velocity while smaller characters, such as punctuation and symbols, receive a lower velocity.

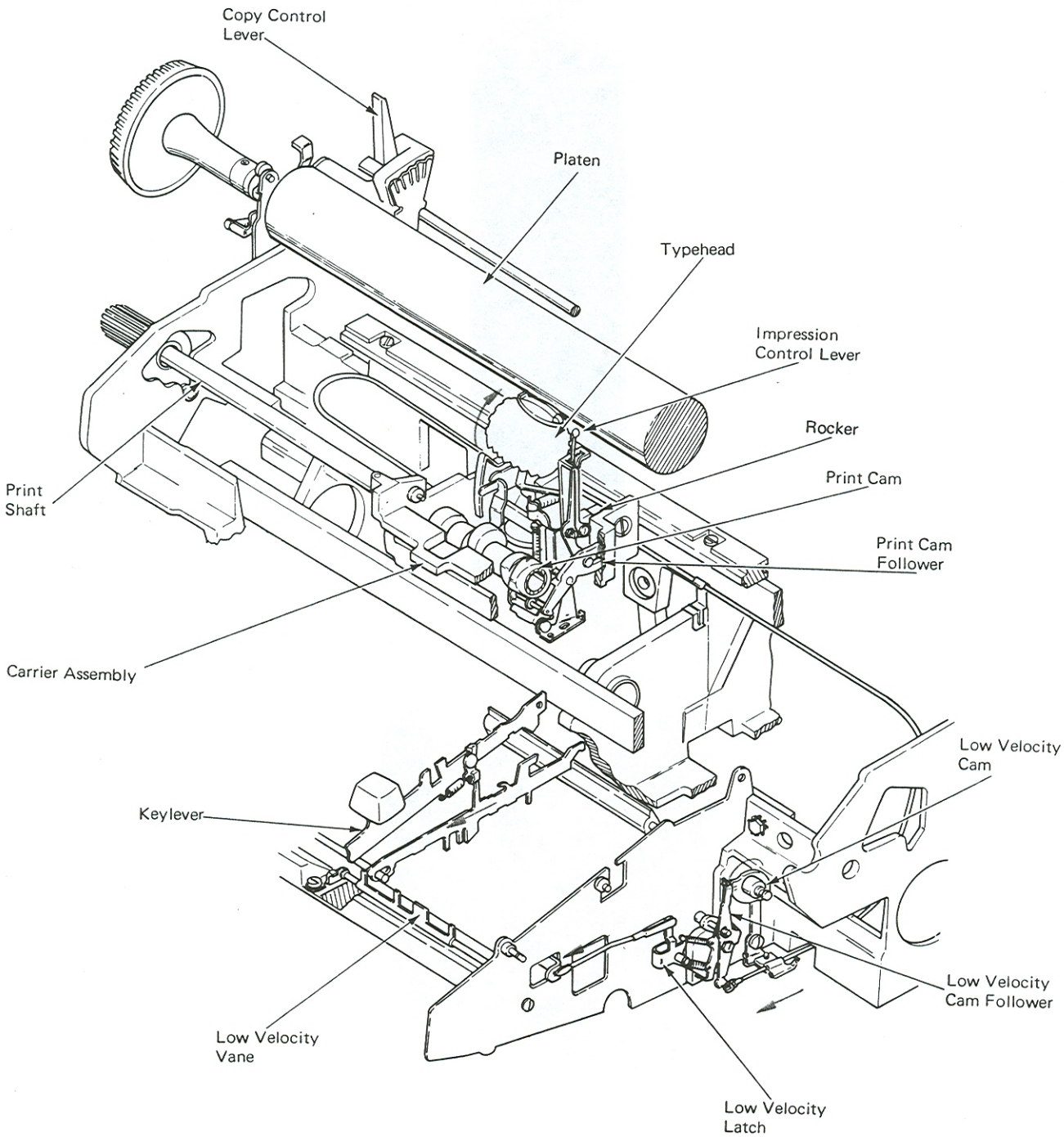

Figure 1 – Print Mechanism

FRONT CARRIER SUPPORT

The typehead is supported in front of the paper by a frame called the carrier (Figure 2). The carrier transports the typehead and related mechanism across the writing line. The carrier assembly is supported in front by the print shaft and a print sleeve. The print sleeve is keyed to the print shaft and turns when the print shaft is rotated. Motion for a print operation is taken off the print sleeve.

Due to up and down motion of the print shaft, the front of the carrier needs additional support. A support is located under the front of the carrier (Figure 2). On level 2 (XX3 and XX5) machines, a carrier pad contacts this anvil when motion of the print shaft occurs. On level 1 machines, a buffer screw and a buffer plate serve the same function. (Rear carrier support is covered in the Fine Alignment Section of this manual.)

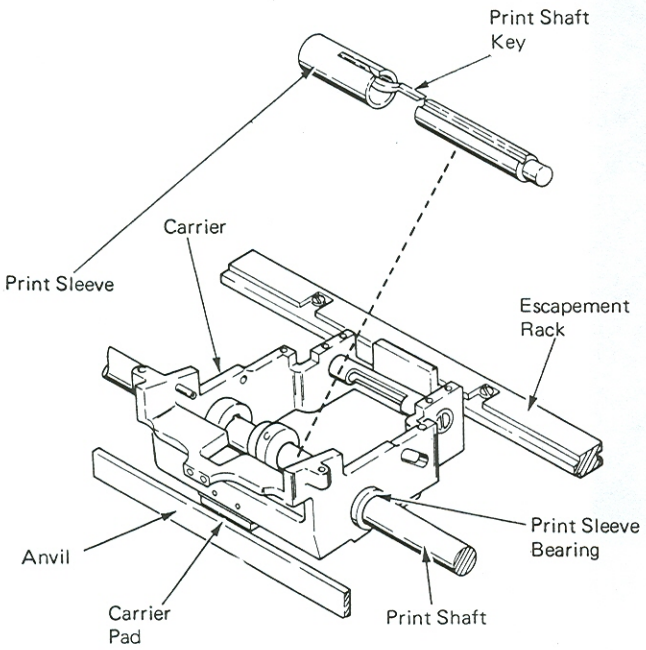

(Level 2)

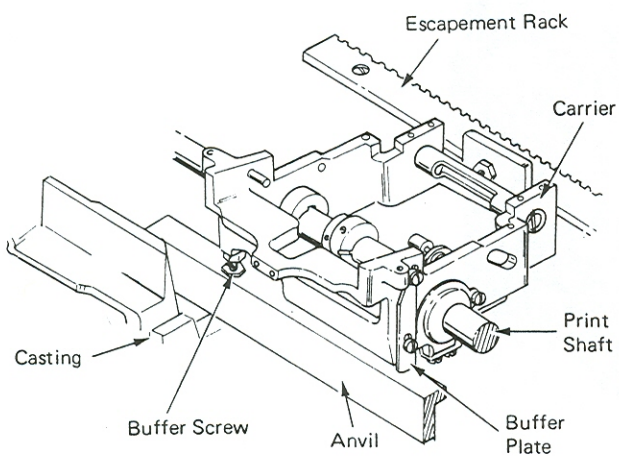

(Level 1)

Figure 2 – Front Carrier Support

PRINT OPERATION

The print shaft supplies the drive to operate the print cam mechanism (Figure 3). The print shaft extends the width of the frame and is supported in a bearing at each end. A gear at the left end of the print shaft engages an idler gear of the character selection mechanism. When the character selection mechanism is cycled, motion is transferred through the idler gear and the print shaft gear to rotate the print shaft top to rear. The print shaft is rotated 360 degrees each cycle.

The print cam is attached to the print sleeve, which in turn is keyed to the print shaft.

When the print shaft is rotated, motion is transferred through the print sleeve to rotate the print cam. Print cam motion is then transferred through the cam follower and the impression control lever to pivot the rocker assembly about the rocker shaft, and power the typehead toward the platen.

On level 2 print mechanisms, the print cam follower roller may be positioned opposite either side of the print cam. On machines without dual velocity, the print cam follower roller will always be positioned opposite the high velocity side.

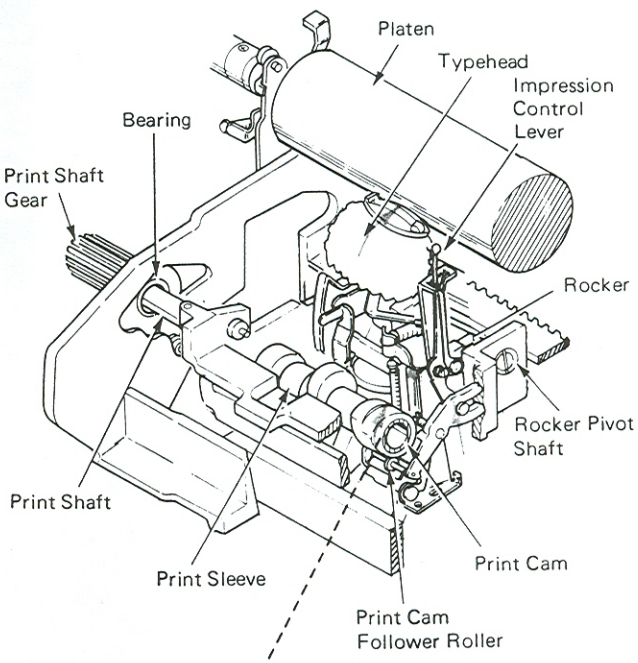

(Level 2)

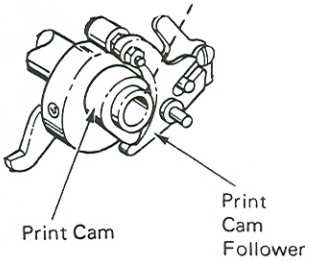

(Level 1)

Figure 3 – Print Operation

IMPRESSION CONTROL LEVER (LEVEL 2)

The impression made by the typehead is determined by the velocity of the typehead upon impact with the paper. By increasing or decreasing the velocity of the typehead with the impression control lever, the impression for all characters can be changed equally.

The impression control lever may be positioned by the operator to one of five different impression settings (Figure 4). Changing the position of the impression control lever causes a pin in the lower part of the lever to move to the front or to the rear of the print cam follower arm. The front-to-rear position of the pin determines the amount of powered travel the typehead receives from the print cam follower. This, plus the amount of free flight, determines the velocity of the typehead upon impact with the paper.

Powered flight is the distance the typehead is driven toward the platen by the print cam. The remaining distance is called free flight. Free flight is the amount of typehead movement from the high point of the print cam to the platen.

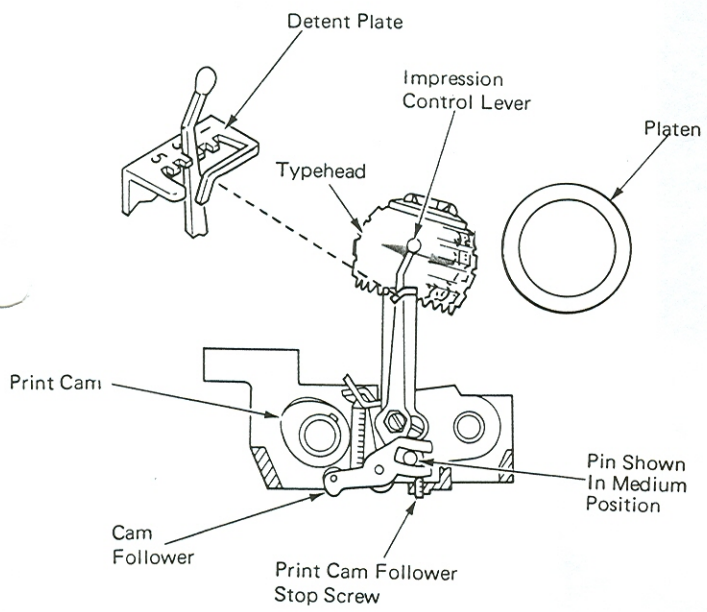

Figure 4 – Impression Control Lever (Level 2) (Right Side View)

PRINT MECHANISM (LEVEL 1)

Level 1 machines did not have the automatic velocity control mechanism. The impression was a preset adjustment and could not be changed by the operator (Figure 5).

The print cam is a double cam. Its function is to power the typehead toward the platen and restore it to rest. A small cam surface on the right is the print cam and moves the typehead toward the platen. A larger cam surface on the left is called the restoring cam. It restores the typehead to rest and prevents rocker bounce.

The cam surface of the print cam is designed so the typehead is powered within a few thousandths of an inch of the platen. Because the typehead is powered nearly all the way to the platen, all the characters are forced to strike the paper slightly, even those with a larger surface area. This arm limits the amount of free flight of the typehead to provide an equal print force for all characters. A heavy arm called the anvil striker is attached to the bottom of the carrier and serves as a stop for the rocker. An anvil is located just under the front of the carrier, and extends between the side frames. It is an angle-shaped bar with an extension to the rear. As the typehead strikes the paper with the correct impression, the striker hits the bottom of the anvil and prevents further movement of the rocker and typehead. This means that the impression for each character will be consistent, with little change between characters.

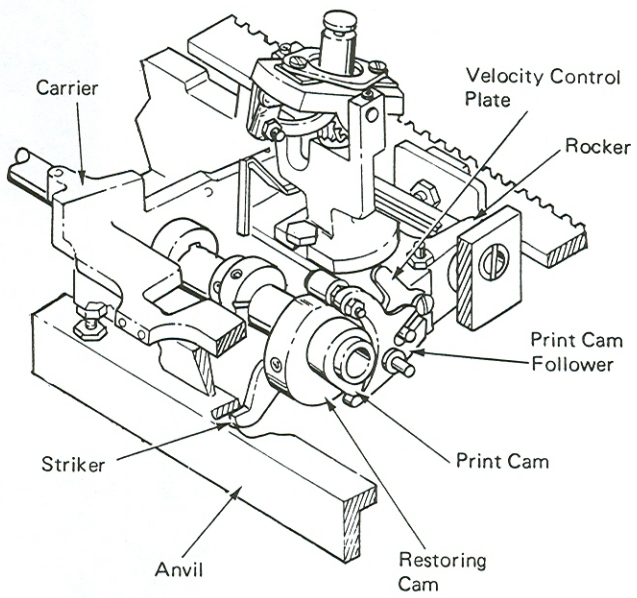

Figure 5 – Print Mechanism (Level 1)

PLATEN

The quality of typed impression is affected by the condition of the platen. Light, heat, chemicals, etc. may affect the platen rubber. An old or worn platen may not be consistent in diameter.

The platen is supported by the carriage guide brackets and held in position by the platen latches (Figure 6).

The platen may be removed by pressing the rear of the latches down and lifting the platen out. It may be installed without depressing the latches; however, caution must be taken to prevent bending the platen shaft. Releasing the feed roll tension will also aid in the installation of the platen.

COPY CONTROL LEVER

The copy control mechanism positions the platen front to rear to allow for different thicknesses of typing material. The copy control mechanism is operated by a lever located at the left end of the carriage (Figure 6). The lever is attached to a shaft that extends through the sides of the power frame. An eccentric collar attached to each end of the shaft operates between platen adjusting plates attached to the carriage end plate. As the lever is moved to the rear, the shaft rotates, causing the eccentric collars to force the carriage end plates to the rear. The platen and paper feed mechanism moves with the carriage end plates. When the copy control lever is pulled forward, the eccentric collars contact the platen adjusting plates and force the carriage forward into the normal position. The copy control lever can be set in five different positions. A spring detent attached to the power frame presses against a knob on the copy control lever to hold it in place.

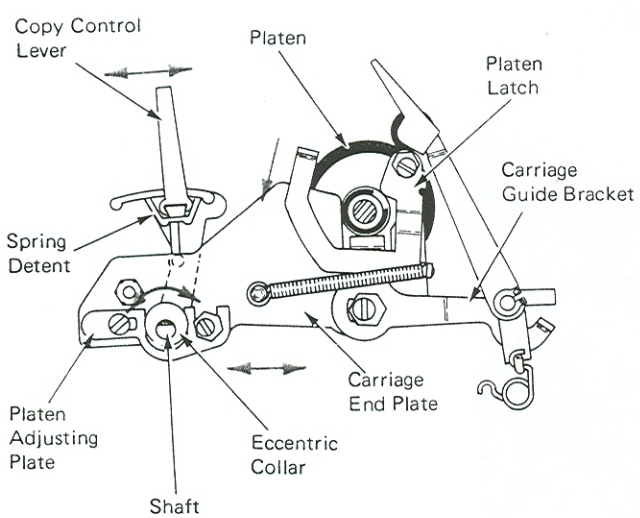

Figure 6 – Platen & Copy Control Lever (Left Side View)

DUAL VELOCITY SELECTION

On machines with dual velocity, selecting a low velocity character causes a pull on the velocity control cable to shift the roller to the low velocity side on the print cam (Figure 7). A low velocity vane is mounted in the keyboard in a position to be contacted by the selector interposer as it is driven forward by the filter shaft. Attached to the right end of the low velocity vane is the low velocity vane link. Rotation of the vane causes a pull on the link, causing the low velocity latch to rotate counterclockwise about its mounting stud. As the latch rotates, it pivots out of the operating path of the adjustable stop attached to the low velocity cam follower. The low velocity cam follower is spring loaded against the low velocity cam. With the low velocity latch removed from its operating path, the cam follower will move to the low spot of the low velocity cam, and cause a pull on the velocity control cable.

If a high velocity character is selected at the keyboard, the low velocity latch will remain at rest in the operating path of the stop on the cam follower. The cam follower is prevented from following the bend of the cam, and no pull is felt on the velocity control cable. The print cam follower roller remains to the right under the high velocity side of the print cam and a high velocity print operation results.

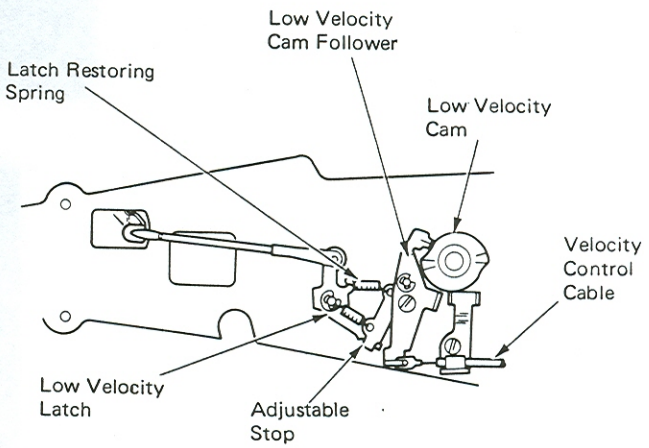

Low Velocity Operation
(Right Side View)

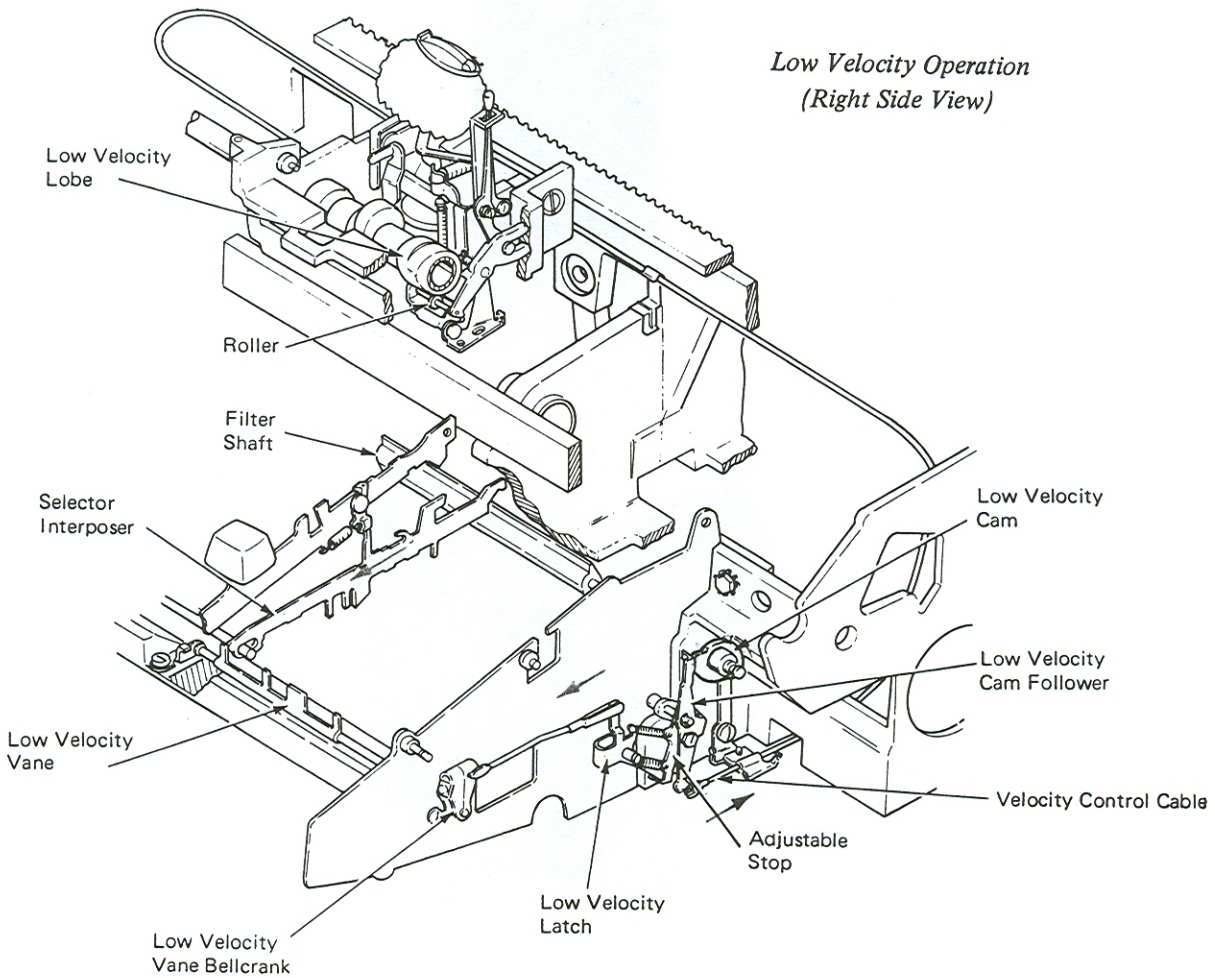

Figure 7 – Low Velocity Sequence

This is done by using a print cam that has two different cam surfaces (Figure 8). The low and high points of both cam surfaces are the same. The only difference is in the bend between their low and high points. The bend of one cam surface has less of a rise and provides the typehead with a lower impact velocity than the other. The difference in typehead velocities produced by the two cam surfaces remains proportional between all settings of the impression control lever.

The print cam follower has a roller mounted on a pin and is free to slide left to right to select the desired velocity side. The cam surface, or side on the print cam that produces the most impact velocity, is called the high velocity side. This is the right-hand side on the print cam. The left-hand side, producing less impact velocity, is called the low velocity side.

The roller is positioned left to right under the desired cam side by a roller yoke that fits over the roller. A lever, called the yoke actuating lever, controls the lateral position of the yoke and roller. It mounts on the tab cord anchor bracket by a shouldered rivet. The yoke actuating lever is spring loaded at the rear and maintains the rest position of the roller directly under the high velocity side of the print cam.

A covered cable called the velocity control cable connects to the yoke actuating lever. Whenever a pull is produced on the velocity control cable, the yoke actuating lever and roller yoke will shift the print cam follower roller from the high velocity side to the low velocity side of the print cam. When the pull on the velocity control cable is released, the yoke actuating lever spring shifts the roller back to its position under the high velocity side of the print cam.

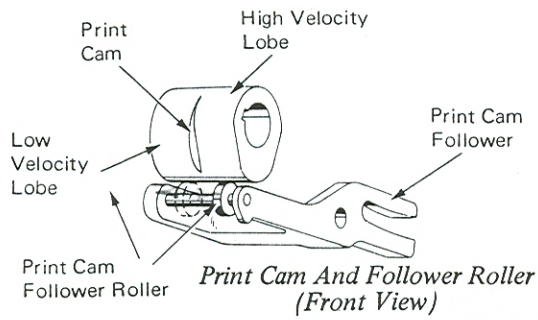

Print Cam And Follower Roller (Front View)

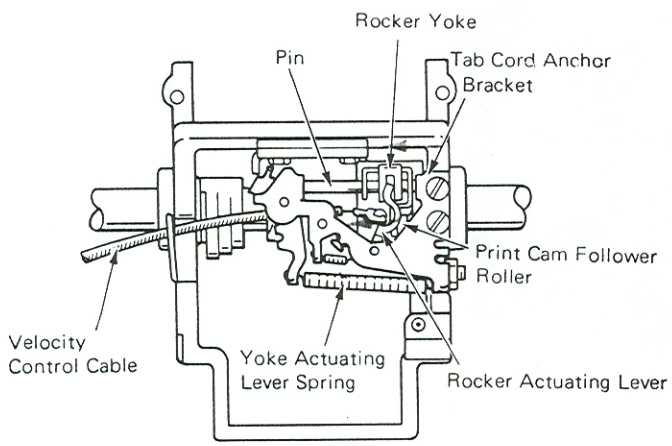

Figure 8 – Yoke Actuating Lever And Spring (Bottom View)

PRINT CAM FOLLOWER STOP SCREW

On the level 2 print mechanism, the print cam follower and roller are held disengaged from the print cam by an adjustable stop screw until the roller has shifted (Figure 9). This prevents the print cam from interfering with the print cam rollers as it shifts from one side to the other.

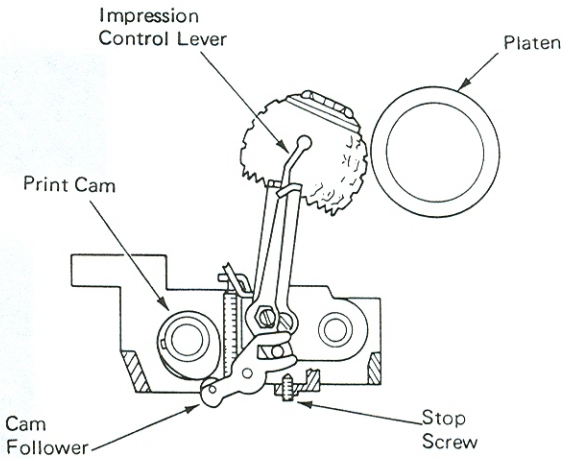

Figure 9 – Print Cam Follower Stop Screw (Right Side View)

PRINT ADJUSTMENTS

1. *Copy Control Lever* – Loosen the multiple copy lever setscrews and rotate the shaft until the high point of the eccentric is up when the multiple copy lever is in the forward detent position. The stop extensions on the copy control detent spring should be formed to provide a positive detent in the far front and rear positions of the lever.

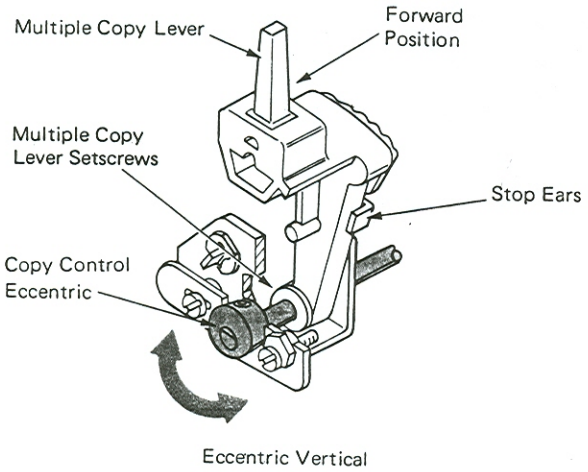

(Left Front View)

2. *Platen Adjusting Plates* – Adjust the eccentric retaining plates front to rear on level 1 machines, or the copy control eccentric left to right on level 2 machines so there is no front-to-rear motion and no binds exist between the eccentric and the platen adjusting plates on each side of the machine.

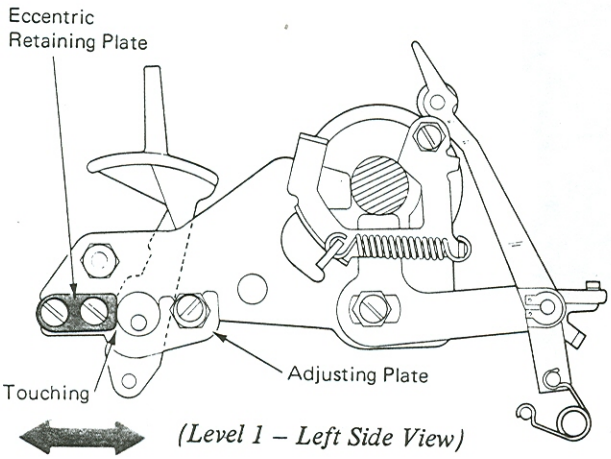

(Level 1 – Left Side View)

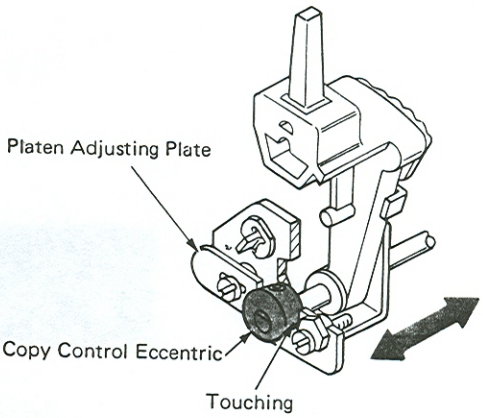

(Left Front View)

3. *Carrier Shoe* – Adjust the level 1 carrier shoe eccentric mounting stud to get .001"-.004" (0.03-0.10 mm) vertical play between the carrier shoes and the escapement rack. The level 2 carriers equipped with the spring loaded carrier shoe should be adjusted for .002"-.006" (0.05-0.15 mm) of vertical movement with the spring pressure removed. This adjustment should be checked at several points along the escapement rack.

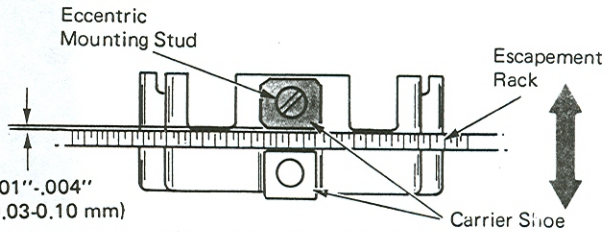

(Level 1 – Rear View)

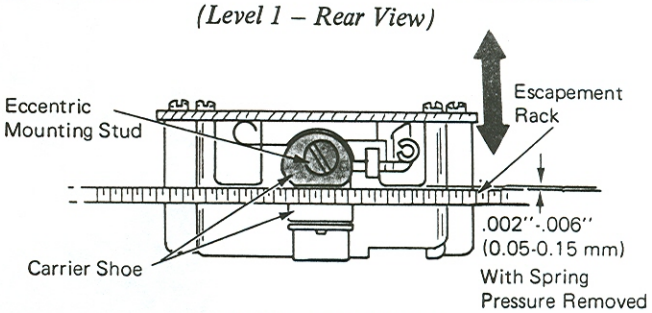

(Level 2 – Rear View)

Level 3 Parallel – Loosen mounting screw on carrier shoe. Press down firmly on rear of carrier, keeping carrier shoe parallel with escapement rack; tighten screw.

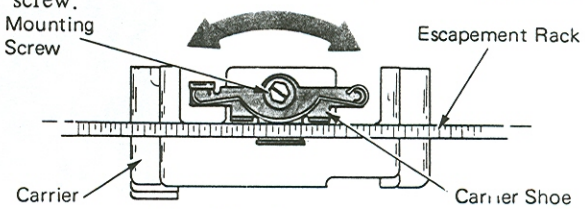

(Level 3 – Rear View)

NOTE: On RB/S machines, ensure that the escapement pawl is centered in the escapement rack teeth.

NOTE: Adjustments 5 through 8 are for level 1 machines only.

4. *Carrier Support – Dual Impression* – Adjust both ends of the carrier support vertically to get .001"-.004" (0.03-0.10 mm) clearance with the bottom of the carrier pad across the whole length of the writing line. The support is attached to the machine power frame by a binding screw at each end.

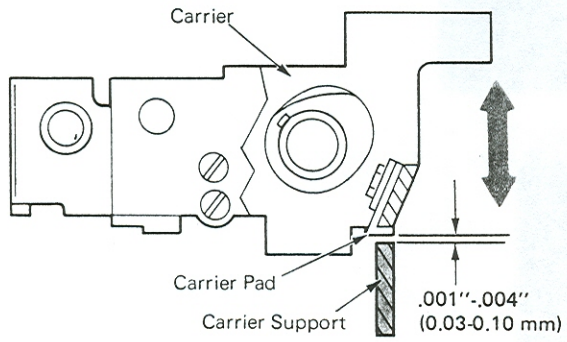

(Left Side View)

5. *Anvil (Level 1)* – Adjust the eccentric at each end of the anvil to properly limit the free flight of the type-head. With one sheet of paper installed in the machine, the period should just fail to print with the copy lever all the way back. With the copy lever pulled forward one notch (second position), the period should print lightly.

NOTE: The restoring cam follower eccentric should be adjusted all the way up while the anvil is being set. On 7X5 machines, the carrier buffers must also be moved up out of the way of the anvil.

No Period Copy Lever – 5
Light Period Or Copy Lever – 4

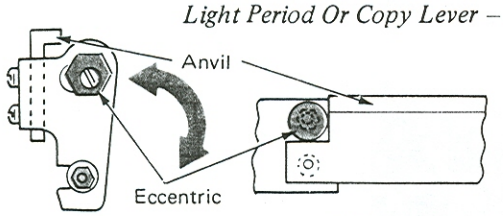

7X1 *(7X3-7X5)*

(Right Side View)

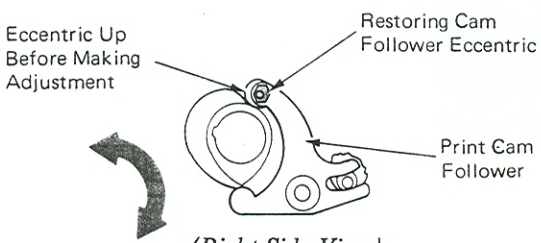

(Right Side View)

6. *Carrier Buffers (Level 1 Only) (7X3-7X5)* – Adjust the buffer plate attached to the right side of the carrier, and the adjusting screw under the left side of the carrier so that each has .002"-.004" (0.05-0.10 mm) clearance with the top of the anvil.

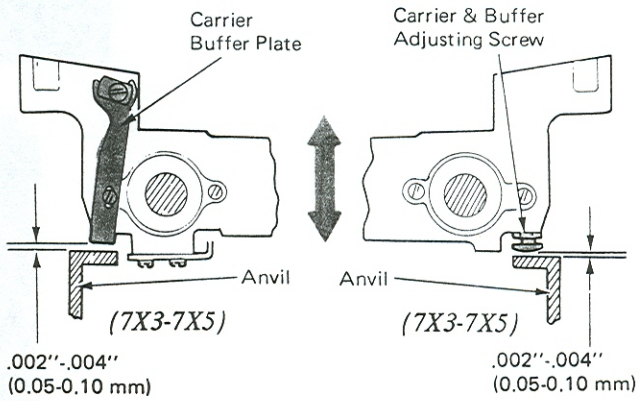

(Right Side View) *(Left Side View)*

7. *Platen Latches* – Adjust the platen latch eccentrics, with the high side down, so the platen is held tightly in position vertically and horizontally. The latches should latch and unlatch freely with the feed rolls released.

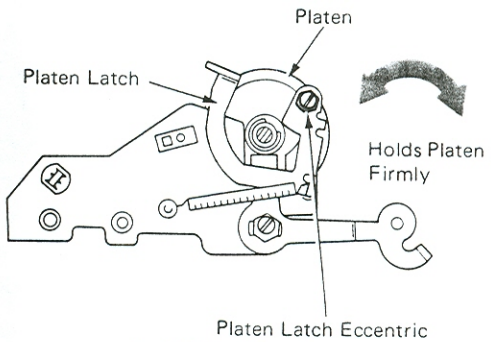

(Left Side View)

8. *Platen Position* –

NOTE: To properly adjust the print mechanism, the correct position of the platen must be established first and then the print adjustments made relative to the platen position.

With the copy control lever forward and the print shaft keyway down, loosen the platen eccentrics and move the platen to the far rear, and as low as possible. Insert the platen gauge on the print shaft and escapement rack at one end of the machine.

a. Adjust the platen front to rear until the platen just touches the platen gauge.

b. Adjust the platen height so that the platen clears the gauge by .030" (0.76 mm). Move the gauge to the opposite end of the machine and repeat the procedure. Check for a parallel condition by sliding the gauge back to the beginning end. With the gauge removed, the platen height adjustment should now be readjusted for even top and bottom color of printed characters.

CAUTION: Any change in the front-to-rear position of the platen requires a readjustment of the velocity control plate and anvil on early level machines. Also, any change in the platen position may change the paper feed adjustments. All paper feed adjustments should be checked and readjusted if necessary.

NOTE: On NRB/S machines, the rear of the platen gauge must be held up against the bottom of the escapement rack. On RB/S machines, the platen gauge must be held down against the escapement rail while making this adjustment.

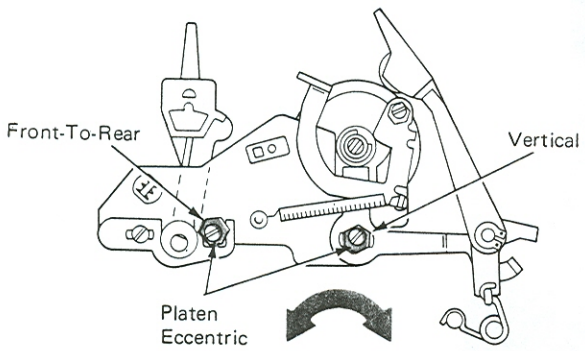

(Left Side View)

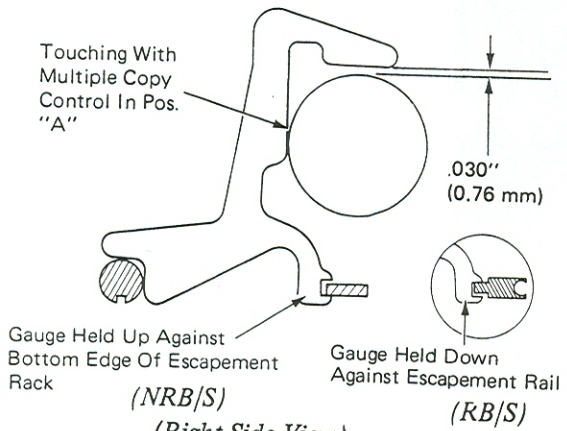

(NRB/S) *(RB/S)*

(Right Side View)

9. *Print Cam Follower Stop Screw* – Adjust the print cam follower stop screw so the print cam follower roller clears the print cam by .020" (0.51 mm) when the machine is at rest. This clearance allows the roller to shift from one side to the other without touching the cam.

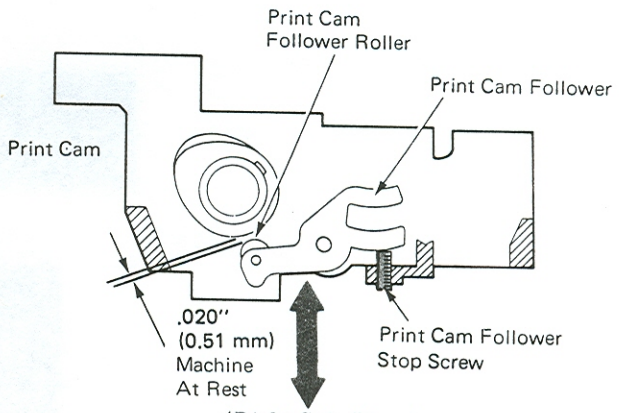

(Right Side View)

This adjustment may be checked by applying a light film of grease on the print cam and then observing the track that the roller makes in the grease when the machine is hand cycled. If the stop screw has been adjusted properly, the roller track in the grease should begin at point A on the print cam. This is just before the beginning of the rise on the print cam.

If the roller track begins before point A, the roller is adjusted too close to the print cam when the machine is at rest. Incorrect roller-to-cam clearance may cause the roller to drag on the print cam as it shifts during a low velocity selection. The roller may then fail to shift, or shift incorrectly. Also, if the roller is adjusted too close to the cam at rest, it may bounce from the print cam as it tries to follow the print cam. This will cause excessive noise and wear, and will affect the typehead impact velocity.

If the roller track begins after point A, the roller rests too far away from the low spot of the print cam and a loss of typehead velocity may result.

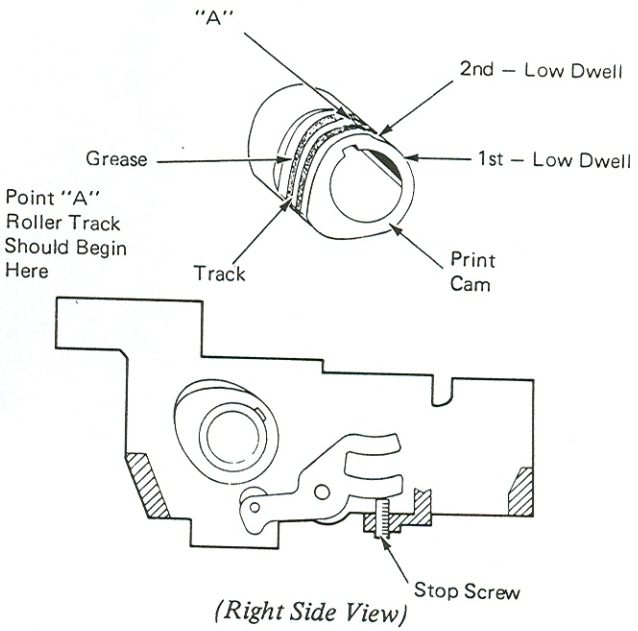

(Right Side View)

NOTE: Adjustments 11 through 21 are for dual impression machines only.

10. *Velocity Control Plate (Level 1)* – The velocity control plate must be adjusted to satisfy the following two conditions.

a. With the cam follower held lightly against the low point of the print cam, the center of the home character should clear the platen by .260"-.270" (6.60-6.85 mm).

NOTE: The adjustments should be checked with the ribbon removed. The .260"-.270" (6.60-6.85 mm) can be checked with two or three tab cards plus the foot of the Hooverometer handle.

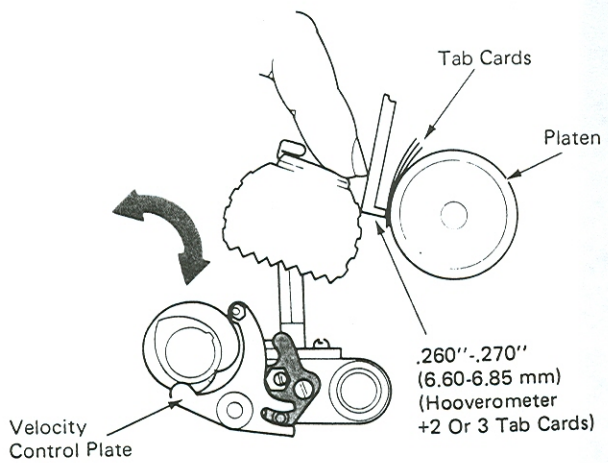

(Right Side View)

b. With the cam follower held lightly against the high point of the print cam, the home character should clear the platen by .020"-.030" (0.51-0.76 mm). Be sure the anvil does not limit the rocker motion.

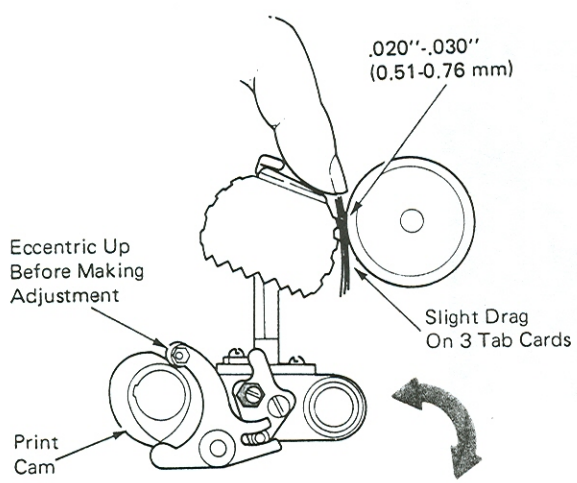

(Right Side View)

11. *Print Cam Follower (Level 1)* – The print cam follower must be adjusted to satisfy the following conditions:

a. *Print Cam Follower Stud* – Adjust the pivot stud left to right so the rubber roller on the follower is centered on the surface of the restoring cam. The stud is held in place in the carrier casting by a setscrew that may be accessed from the bottom of the machine.

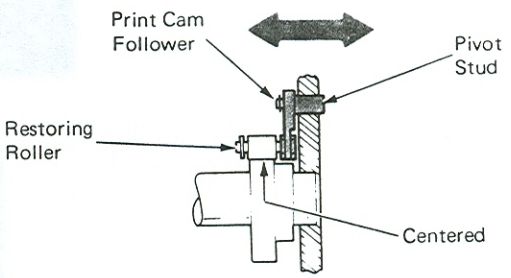

(Top View)

b. Adjust the eccentric, keeping the high point forward, so that the roller just touches the restoring cam when the typehead is held toward the rear. The print cam follower should be on the high point of the cam, and the platen removed to make this adjustment.

NOTE: If the roller is too close to the restoring cam, it may bind against the cam during print shaft rotation. If too much clearance exists, the typehead may not be restored as quickly as is necessary and unclear characters may result.

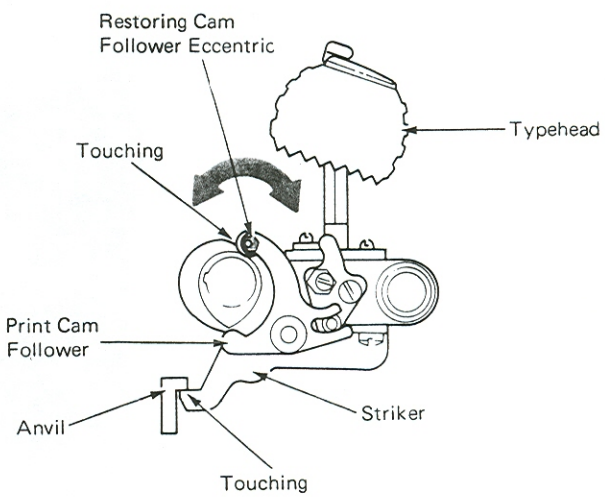

(Right Side View)

12. *Yoke* – Position the yoke under its mounting screws so the density of the left and right sides of a printed character is the same.

This adjustment will affect the tilt ring homing adjustment, the typehead homing adjustment and skirt clearance. Be sure to check these adjustments after changing the position of the yoke.

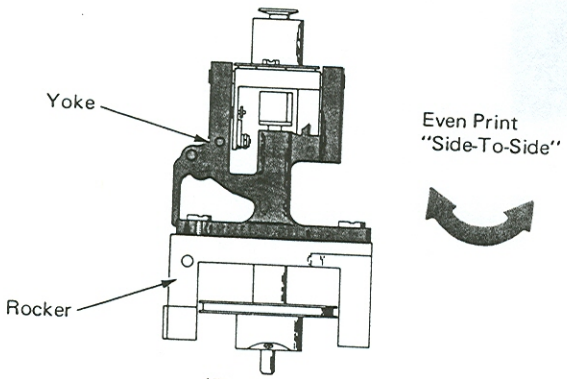

(Front View)

13. *Velocity Control Cable Clamp* – Adjust the cable cover left to right under the carrier clamp until the end of the cover is flush to .010" (0.25 mm) inside the right-hand edge of the cable clamp. This adjustment prevents the yoke actuating lever from binding against the cable cover.

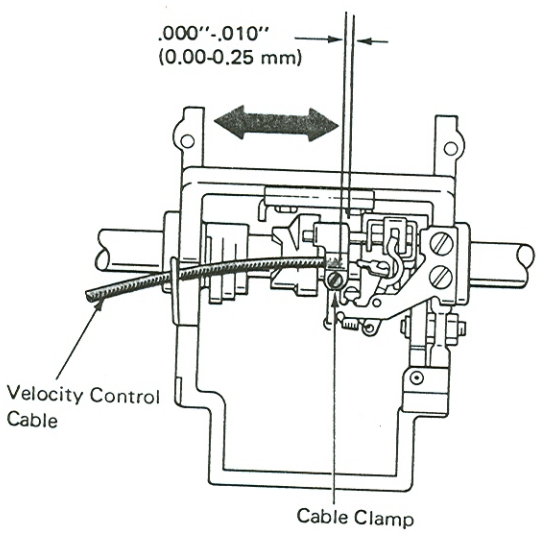

(Bottom View)

14. *Carrier Cable Deflector* – Form the deflector to the rear as far as possible without touching the power frame.

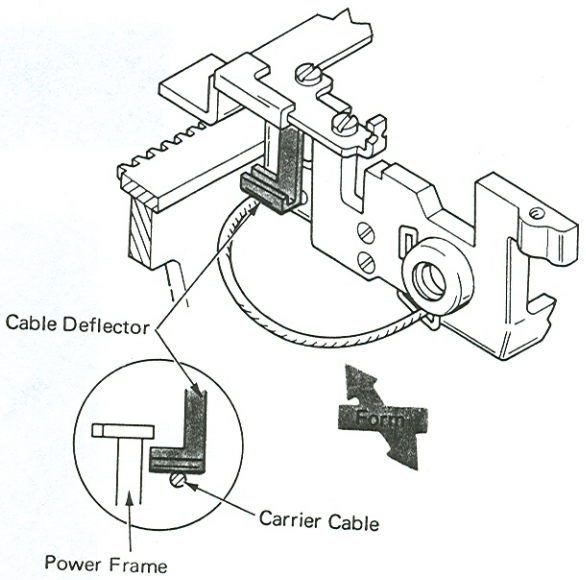

(Left Side View)

15. *Center Cable Clamp* – Position the cable cover left to right within the center cable clamp so the bend in the cable will just touch the machine left-hand side frame when the carrier is resting two spaces from the far left-hand margin and will clear the power frame on the third space. This adjustment allows the carrier to operate freely across the whole writing line and allows the velocity control cable to operate with a minimum of bouncing.

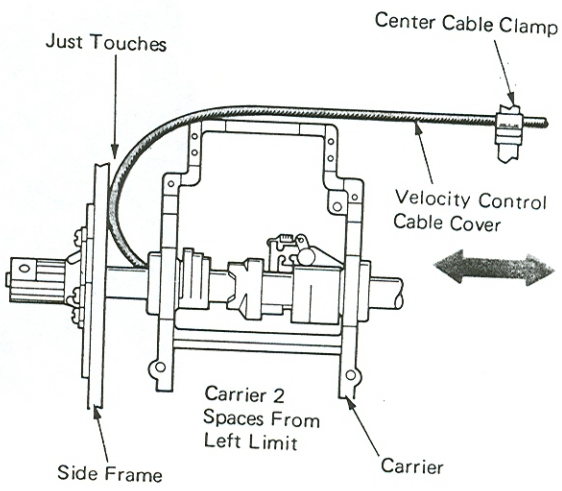

(Top View)

16. *Velocity Control Keyboard Cable Clamp* – Adjust the cable cover front to rear under the clamp so the print cam follower roller will shift on the low velocity side of the print cam by the width of the roller plus .030"-.040" (0.76-1.02 mm) when a low velocity character is half cycled. Moving the cable cover to the rear will produce more motion to the roller.

This adjustment should be checked by observing the track of the roller in the grease on the print cam.

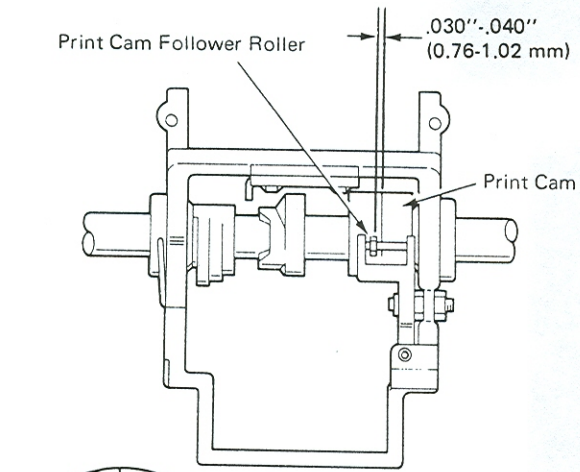

(Top View)

(Bottom View)

17. *Low Velocity Latch Link* – With the machine at rest, the low velocity latch link should be adjusted to just reach the distance between the low velocity vane and the low velocity latch. This adjustment ensures the latch will fully overlap the follower, and there will be no lost motion in the system.

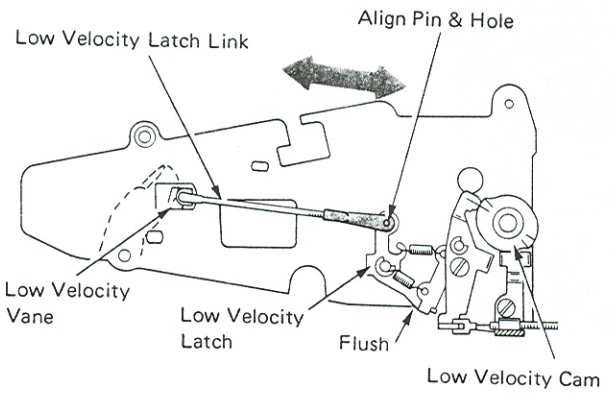

(Right Side View)

18. *Low Velocity Cam* – Adjust the cam so that when a low velocity character is slowly hand cycled, the low velocity latch clears the adjusting stop on the cam follower by .008"-.012" (0.20-0.30 mm) just as the cam follower mark lines up with the second mark on the low velocity cam.

This adjustment can easily be made using the following procedure:

a. With the machine at rest, loosen the low velocity cam. Align the second mark with the mark on the cam follower.

b. While holding the cam in position, hand cycle a low velocity character until the latch clears the stop by .008"-.012" (0.20-0.30 mm). Tighten the cam and recheck this adjustment.

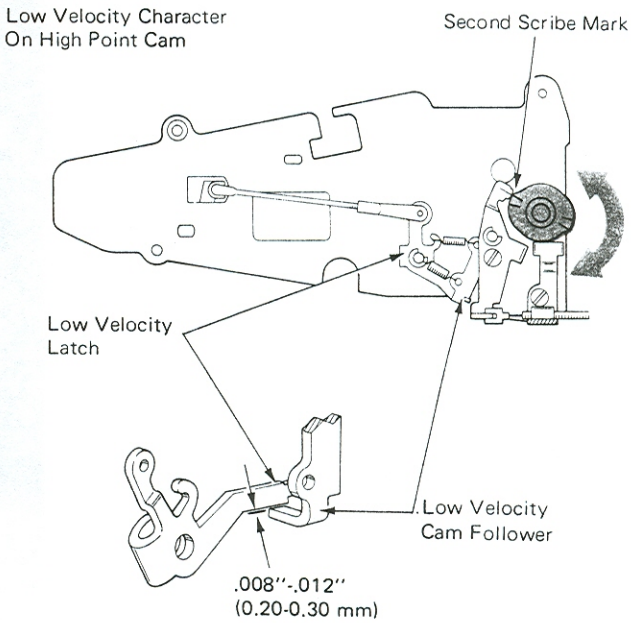

(Right Side View)

19. *Low Velocity Cam Follower Stop* – With the cycle shaft latched at rest, adjust the low velocity cam follower stop for .008"-.012" (0.20-0.30 mm) clearance with the low velocity latch. Loosen the binding screw and rotate the low velocity cam follower stop to satisfy this condition.

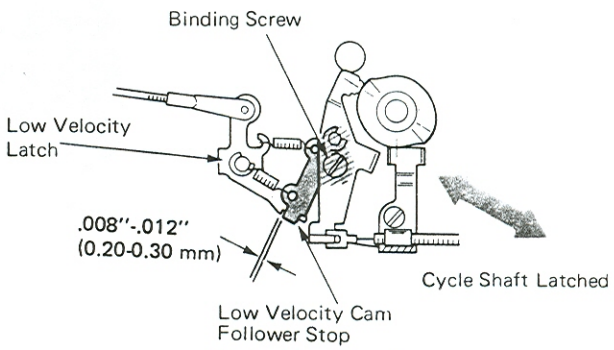

(Right Side View)

20. *Powered Flight* – With the machine latched at rest and the impression control lever set at position 4, loosen the binding screw and move the detent plate front-to-rear until a clearance of .250" is obtained between the center of the letter "z" and the platen. The foot of the Hooverometer may be used to measure the clearance.
CAUTION: The copy control lever must be positioned all the way forward when making adjustment No. 20 and No. 21.

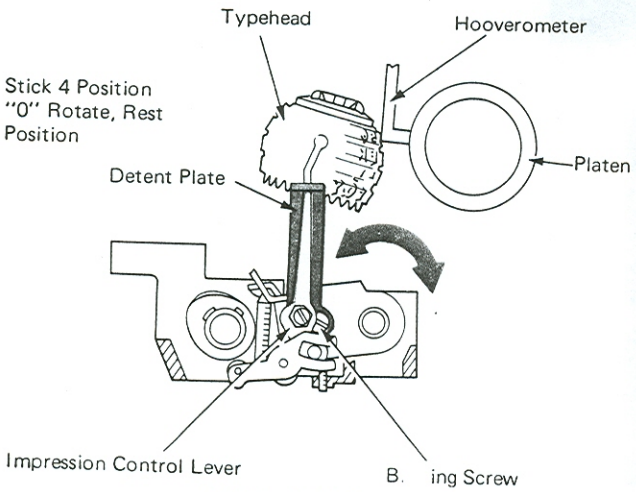

(Right Side View)

21. *Free Flight* – With the impression control lever set at 4, hand cycle the letter "z" until the machine is resting on the high point of the print cam. Adjust the eccentric on the impression control lever for .035" (0.89 mm) between the typehead and platen. Keep the high part of the eccentric forward. The pusher end of a spring-hook may be used to measure this clearance.

NOTE: Adjustments No. 20 and No. 21 directly affect each other and both must be adjusted until they are correct.

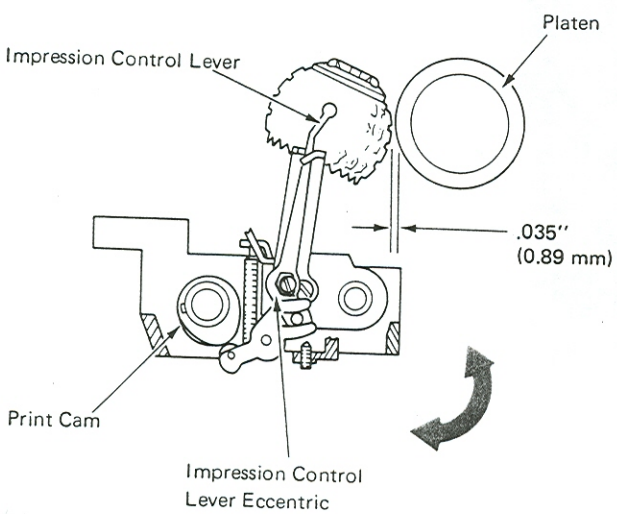

(Right Side View)

BLANK PAGE IN MANUAL FOR ADDING NOTES

PAPER FEED AND INDEX OPERATIONAL THEORY

The purpose of the paper feed and index mechanism is to hold the paper against the platen so that it will move with the platen as it is indexed vertically.

The paper feed mechanism uses an "A frame" for support and contains all the parts necessary to control paper feed.

The paper is held against the platen by the front and rear feed roll assemblies located below the platen. Each feed roll assembly contains three or four rubber rollers equally spaced across the feed roll shaft and attached to the shaft.

The feed rolls mount in the front and rear feed roll arm assemblies. Each feed roll arm assembly turns on a pivot stud at the rear of the "A frame." Heavy extension springs, connected between the "A frame" and feed roll arm assemblies, supply constant tension on the feed rolls. There are several notches cut into the feed roll arm assemblies to provide a means of adjusting the feed roll pressure.

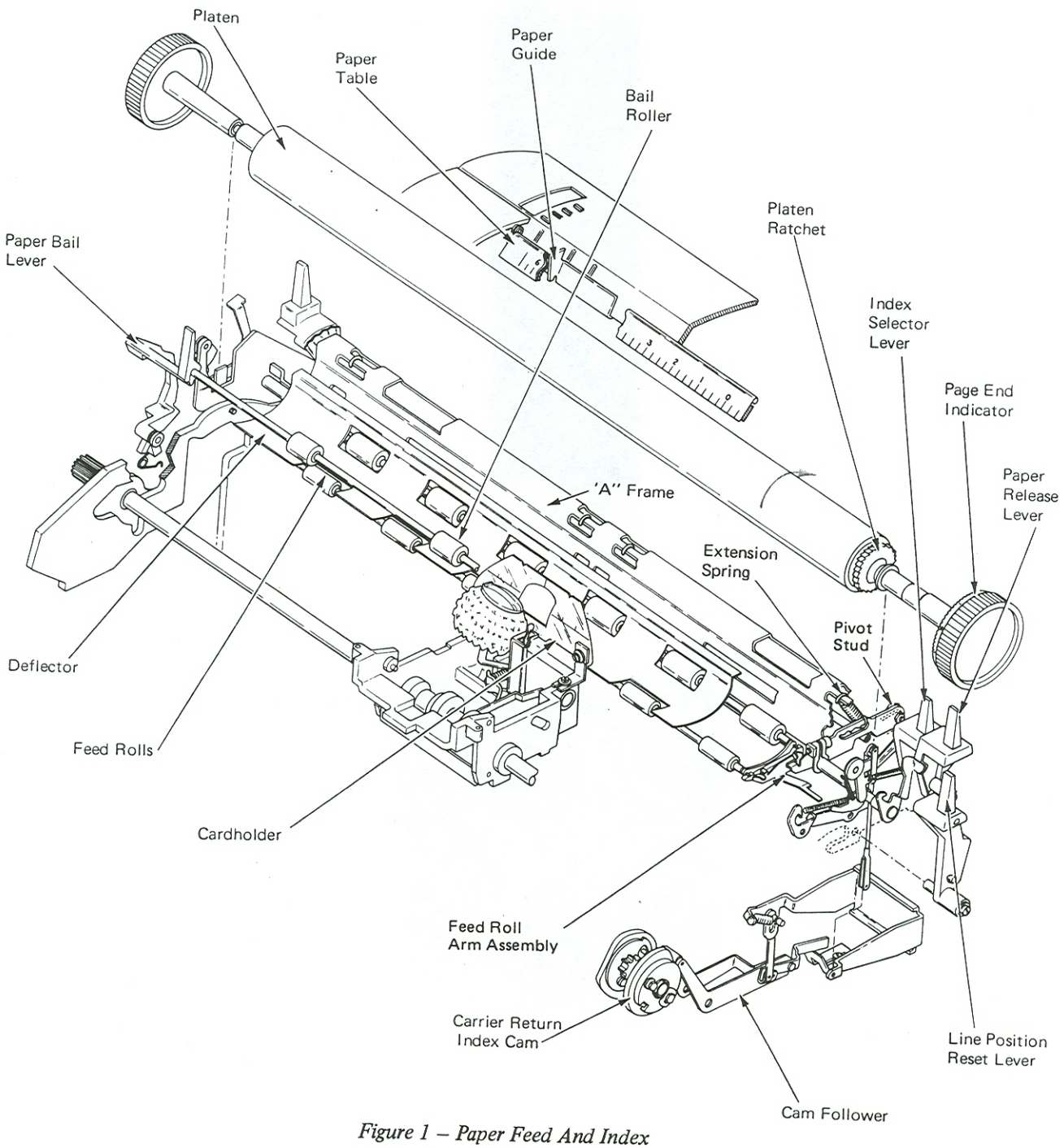

Figure 1 – Paper Feed And Index

LEVEL 1 PAPER FEED

On level 1 paper feed assemblies, a carriage tie rod supports the paper feed mechanism. The paper feed mounting arms attached to the carriage tie rod support the feed roll arm assemblies and the feed roll actuating shaft. The feed rolls mount in the front and rear feed roll arm assemblies. The front feed roll arms pivot on the feed roll actuating shaft. Also pivoting on the feed roll actuating shaft is a feed roll tension arm. Heavy extension springs are connected between the carriage tie rod and one of the holes in the feed roll tension arm to provide a means of adjusting the feed roll pressure (Figure 2).

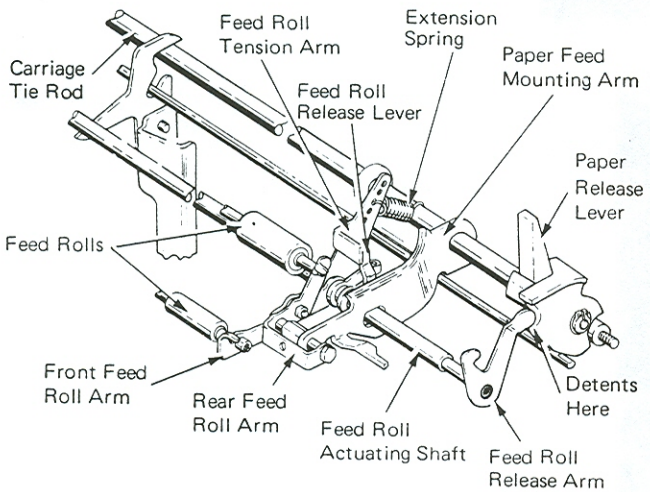

Figure 2 – Paper Feed (Level 1) (Released Position)

PAPER FEED

As the paper is inserted into the machine, an adjustable paper guide, mounted on the center cover at the rear of the platen, serves to position the paper for its left margin position (Figure 3). The paper deflector guides the paper between the rear feed roll and the platen. As the platen is turned, the paper is forced to move with the platen. The deflector guides the paper around the platen into position between the front feed roll and the platen. As the paper is fed further, the end of the paper is guided up by the cardholder attached to the rear of the carrier.

The cardholder helps to hold the typing material against the platen in the printing area. A scale on each side of the cardholder aids the typist in inserting material into the machine to a particular printing point. The vertical marks on the scale indicate the center of the character space and the horizontal line indicates the bottom of the writing line. A single mark, located at the top of the cardholder, indicates the center of the next character to be typed.

Above the writing line the paper is engaged by three rubber rollers mounted on the paper bail (Figure 3). These rollers hold the paper against the platen above the writing line to reduce the possibility of overprinting on the paper. The rollers are also used to feed the paper vertically after the bottom of the paper has left the front feed rolls.

The paper bail is supported by a lever at each end and pivots front to rear. A toggle spring attached to each bail lever serves to hold the bail rolls either to the rear against the platen or forward in the release position.

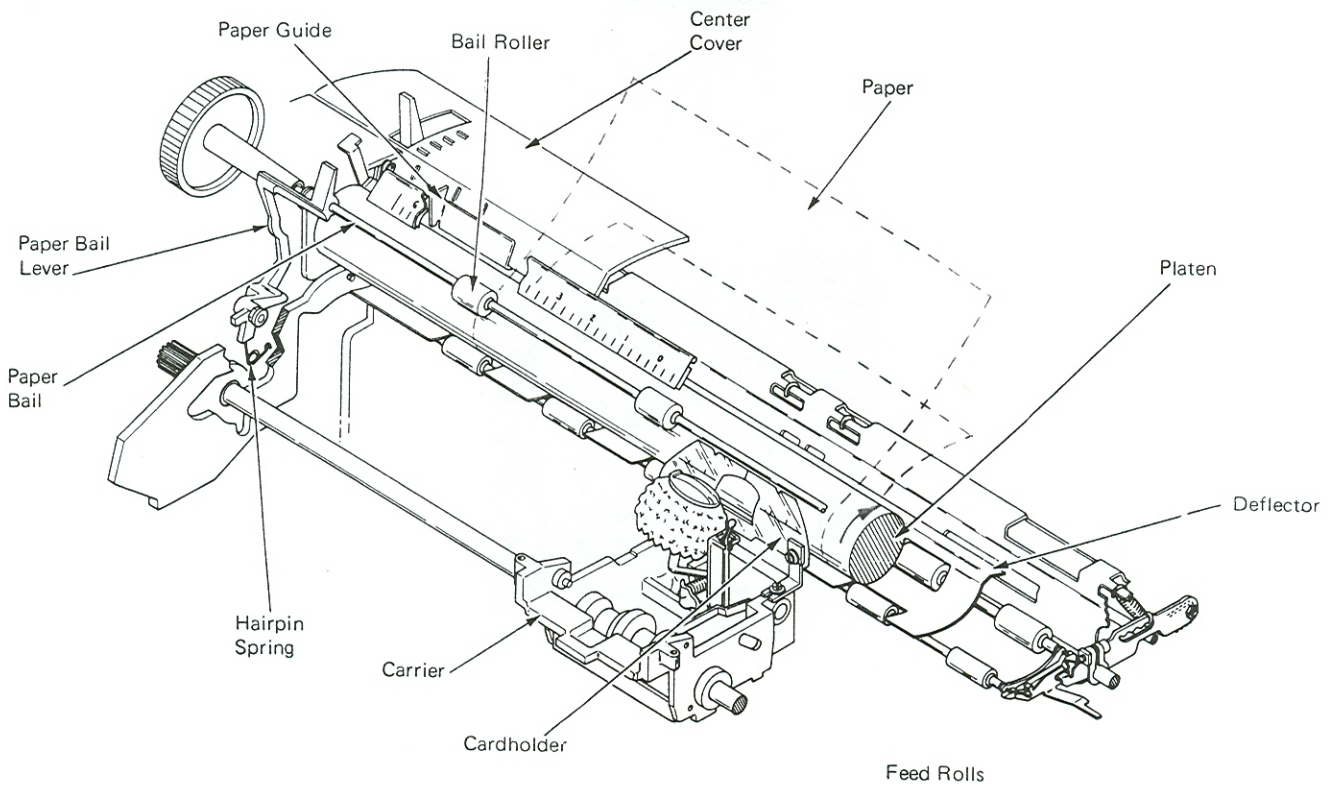

Figure 3 – Paper Feed

PAPER RELEASE

The pressure of the feed rolls can be released from the platen by pulling forward on the paper release lever located at the right end of the machine. This will allow the operator to position the paper correctly and make it easier to insert nd remove the paper (Figure 4). The front of the paper lease lever cams the feed roll actuating shaft and has a lug resting on each feed roll tension arm. As the shaft rotates, the feed roll release levers rotate the feed roll tension arms, moving the feed rolls away from the platen. When the paper release lever has been pulled all the way forward, the end of the feed roll release arm moves into a detent that holds the feed roll release lever in the released position.

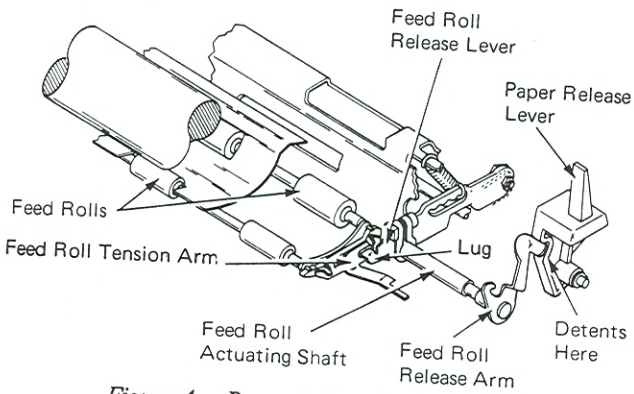

Figure 4 – Paper Release Mechanism (Released Position)

Paper release on machines equipped with tie rod support is done by pulling forward on the paper release lever located e right end of the machine (Figure 5). A cam surface on the front of the paper release lever cams the feed roll release arm forward to rotate the feed roll actuating shaft. The feed roll release levers are clamped to the feed roll actuating shaft and rest behind a lug on each feed roll tension arm. As the shaft rotates, the feed roll release levers rotate the feed roll tension arms and the front feed roll arms down, away from the platen. Due to the connection between the front feed roll arm and the rear feed roll arm, the rear feed roll arms are forced away from the platen. When the paper release lever has been pulled all the way forward, the end of the feed roll release arm moves into a detent to hold the feed roll release lever in the released position.

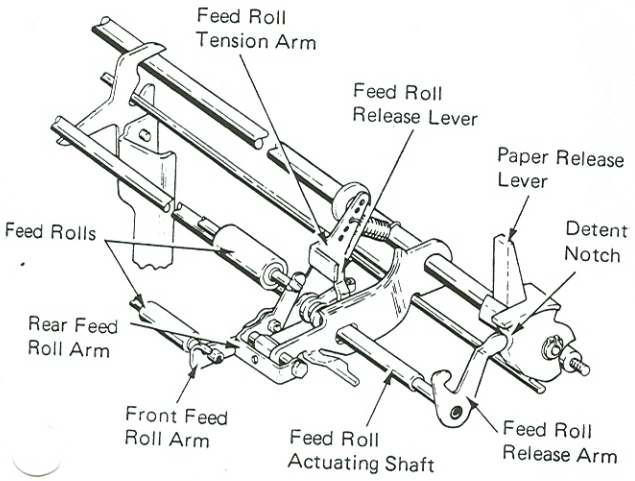

Figure 5 – Paper Release (Released Position)

INDEX MECHANISM

The index mechanism linespaces the paper vertically. An index operation can be done by depressing either the carrier return keylever or the index keylever. Depressing the carrier return keylever also causes the carrier to move to the left margin. Depressing the index keylever causes only an index operation. The index selector lever may be positioned so the mechanism will line space either one or two lines during each operation. With the lever in the forward position, single line spacing will occur. The mechanism will double line space if the lever is to the rear. Indexing is done by a pawl which engages and rotates a ratchet on the right end of the platen (Figure 6). The ratchet is locked to the platen so the platen will rotate.

Motion to operate the index mechanism is supplied through the carrier return/index cam. Motion is then transferred through the cam follower to the multiplying lever and the index link. The rear of the multiplying lever is always in contact with the multiplying lever stop which is attached to the power frame. The index link will receive the same amount of motion each time the cam operates, for each position of the index selector lever.

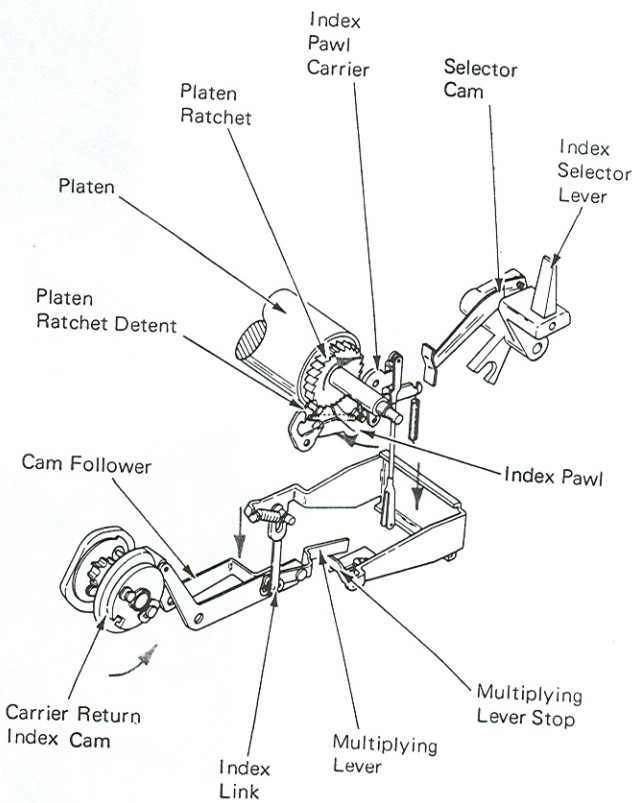

Figure 6 – Index Operation

INDEX SELECTION MECHANISM (EXCEPT 54 TOOTH)

The index pawl entry into the platen ratchet is controlled by the selector cam located on the index lever (Figure 7). The selector cam has two steps at the forward end, in a position to contact the rear of the index pawl. The index pawl is spring loaded toward the ratchet.

The selector cam is held in the single or double space position by a toggle spring. The selector cam movement is limited by two extensions at the bottom of the lever that contact the toggle spring mounting stud.

In the double line space position, the index pawl is allowed to enter the platen ratchet immediately. The index pawl then rotates the ratchet two spaces until the pawl contacts the platen overthrow stop. The platen overthrow stop holds the pawl into the ratchet tooth to prevent further rotation of the platen. The platen detent roller is spring loaded into the ratchet teeth. During an index operation, the platen detent roller is moved into the next tooth of the platen ratchet to maintain platen position.

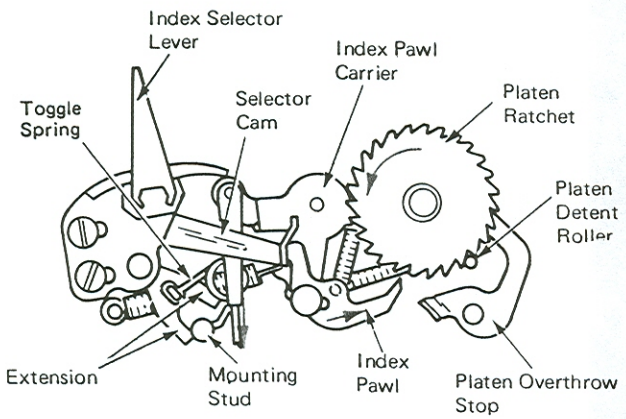

Figure 7 – Index Selection Mechanism (Double Space Position – Left Side View)

If only a single space operation is desired, the index pawl must be prevented from entering the ratchet until it has passed one tooth of the ratchet.

This is done with the index selector lever forward. The index pawl maintains contact with the line space cam lever longer, which delays the entry of the pawl into the platen ratchet (Figure 8). The remaining motion after the index pawl enters the ratchet is enough to cause only one tooth of rotation to the platen.

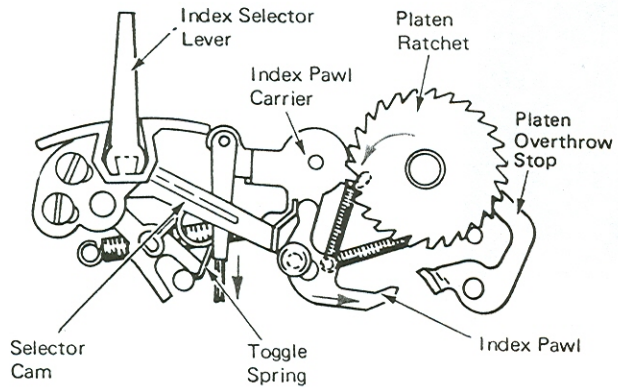

Figure 8 – Index Selection Mechanism (Single Space Position – Left Side View)

PAWL OPERATION

The index pawl has an elongated pivot hole so that it moves forward during part of the index stroke (Figure 9). As the index mechanism operates, the pawl engages the ratchet tooth. There is a slight delay until the pawl carrier reaches the end of the elongated slot in the index pawl. Because of the speed at which the pawl carrier operates, the platen is caused to move before the index stroke. Without the elongated hole in the index pawl, the platen ratchet would reach the final position before the index pawl. This is prevented by the pawl moving with it and reaching the overthrow stop at the same time the platen reaches the final position. The pawl is then held into the ratchet and blocks any further rotation of the platen.

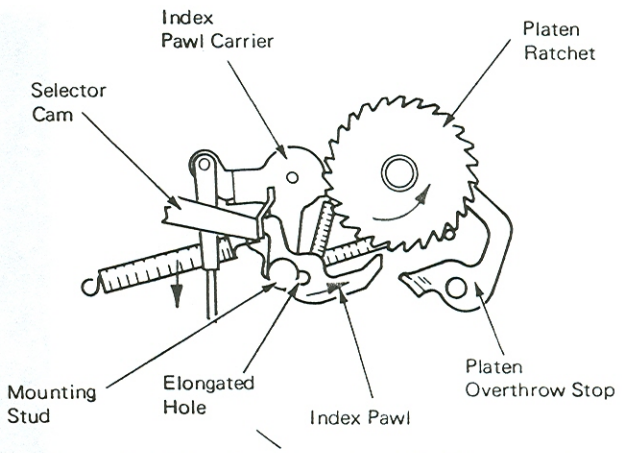

Figure 9 – Index Pawl Operation (Left Side View) (Double Space Position)

54-TOOTH INDEX SELECTION MECHANISM

The 54-tooth index mechanism operates basically the same as the mechanism just described. However, there are three positions for the index lever (Figure 10). The selector cam has an elongated hole with three detent positions on the lower side. An adjustable stud mounted on the index bracket moves into one of the detents of the selector cam to control index pawl entry into the platen ratchet. This controls feeding two, three or four ratchet teeth to index the platen a space, space and a half, and two spaces.

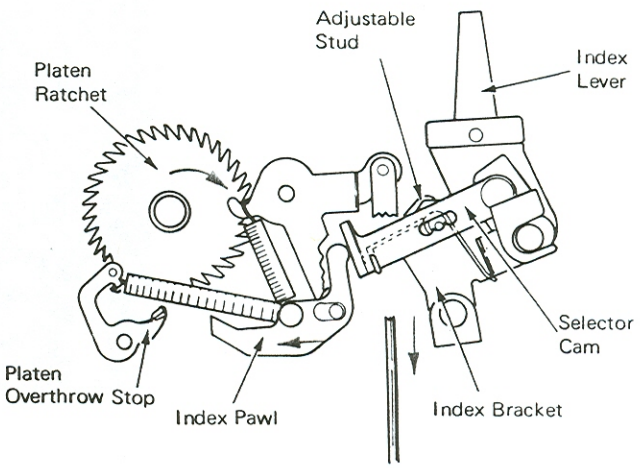

Figure 10 – Half Line Spacing (Right Side View) (One And A Half Space Position)

PLATEN VARIABLE

The platen variable is used for typing permanently above or below the writing line or locating the writing line after inserting the paper (Figure 11). The platen ratchet must remain stopped when selecting a new writing line so that e detent roller will be bottomed between the two teeth of ..e ratchet at the new position. A clutch mechanism connects the ratchet to the platen so that it can be engaged for line spacing and disengaged by pushing the left-hand platen knob toward the right. As long as the platen knob is held to the right, the platen can be rotated freely while the ratchet remains stopped. When the knob is released, the clutch is automatically re-engaged by spring tension.

When the driver is disengaged from the platen end plug, the platen can be turned to the desired position. The driver can then engage different grooves and lock the platen in the new position. The left-hand platen knob is mounted to a shaft that slides left to right inside the platen. A light compression spring holds the shaft toward the right to prevent free play. The shaft pushes against the platen driver. Movement of the platen knob toward the right is transferred to the driver to disengage it from the platen end plug.

The left side of the platen ratchet contains two pins that fit into holes in the platen driver. The platen driver operates left to right and always turns with the ratchet. A compression spring between the ratchet and the driver loads the driver to the left so the grooves on the outer surface of the driver engage with matching grooves inside the platen end plug. The engaging of the grooves causes the platen, the driver and the ratchet to be locked together and turn as a unit.

PAGE-END INDICATOR

The page-end indicator (Figure 11), located on the inside of the right-hand platen knob, allows the operator to know how much space remains to the end of the page. It is calibrated in half inches. The operator must align the top edge of the paper with the writing line on the cardholder. For a standard size sheet of paper, the operator must rotate the indicator until position 2 is in line with the horizontal mark on the top of the typewriter next to the right platen knob. When using other than standard 11" paper, the operator may locate the indicator setting from the page-end indicator chart in the operator manual.

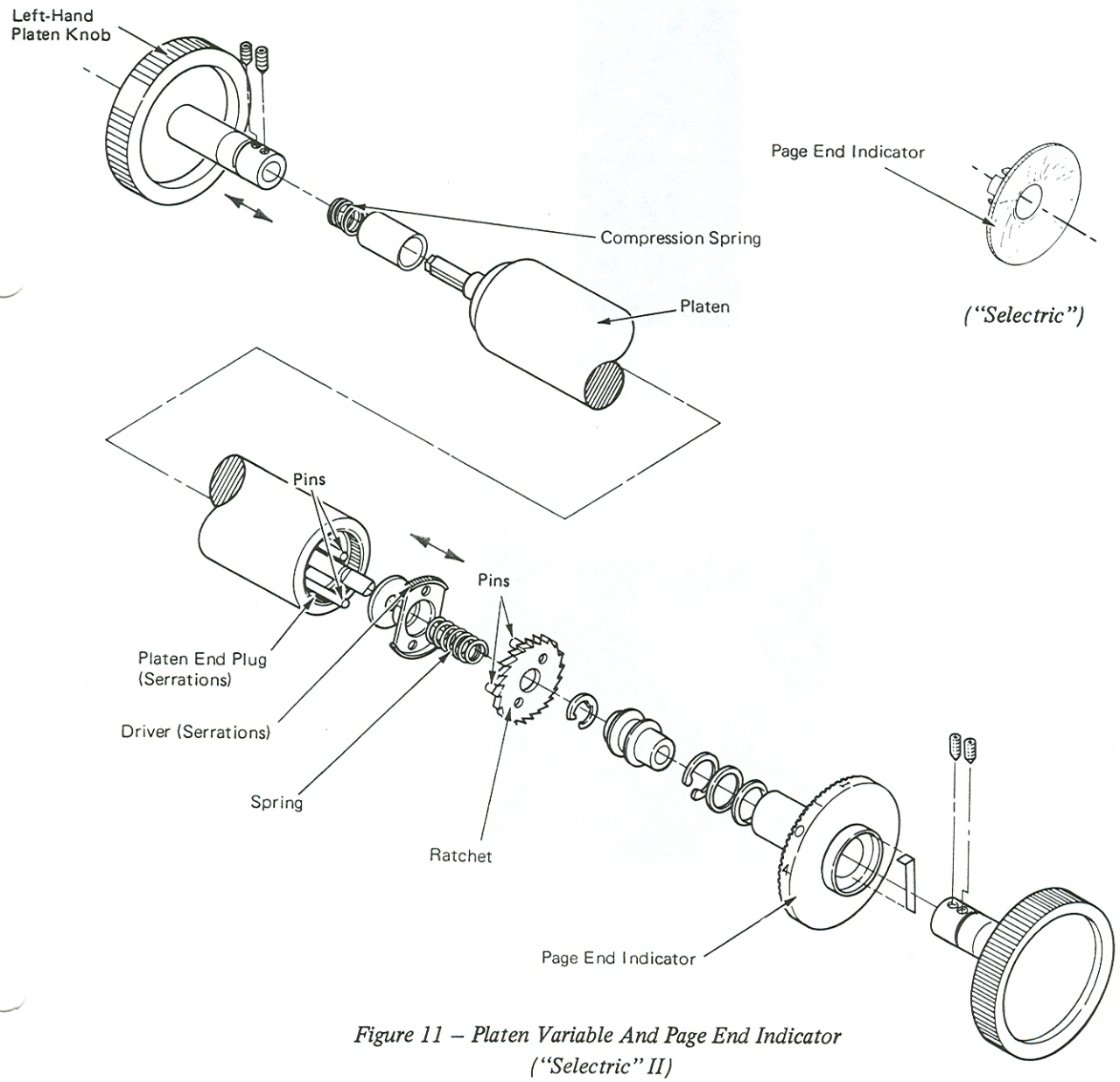

Figure 11 – Platen Variable And Page End Indicator ("Selectric" II)

LINE POSITION RESET LEVER

The line position reset lever mechanism (Figure 12), located on the right end of the platen, allows the operator to leave a typed line, and return again. When the lever is moved forward, the ratchet detent is moved away from engagement with the platen ratchet. The platen is then free to turn without contacting the detent. After the operator has made the insertion or correction, the platen must be returned to the approximate typing line, and the lever to its home position. This relocates the typing line by allowing the ratchet detent to engage the platen ratchet.

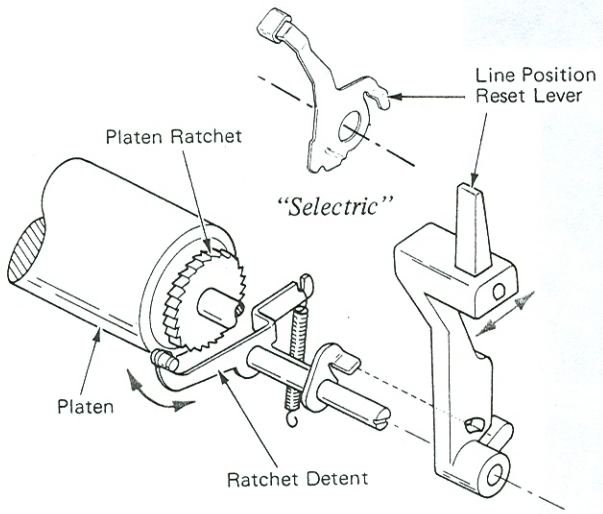

Figure 12 – Line Position Reset Lever "Selectric" II

PAPER FEED AND INDEX ADJUSTMENTS

NOTE: The platen position must be correct before any paper feed adjustments are made. (See Print section.)

1. *Paper Feed Support (Tie Rod Only)* – With the feed roll tension spring disconnected, position the center support bracket so that the forward lug just touches the bottom of the feed roll actuating shaft while the rear lug just touches the top of the carriage tie rod. The center support bracket should not bend the copy control shaft.

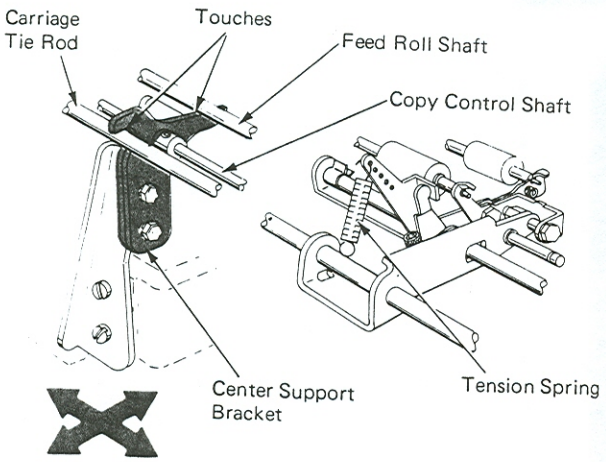

(Left Rear View)

2. *Feed Roll Tension (Tie Rod Only)* – Place the feed roll tension springs in the hole of the feed roll arms that will provide proper tension measured at the front feed roll pivot points. The 7X1 machines should be adjusted for 48 oz. (1350 g) tension and the XX3-XX5 machines should be adjusted for 32-40 oz. (907-1134 g) tension.

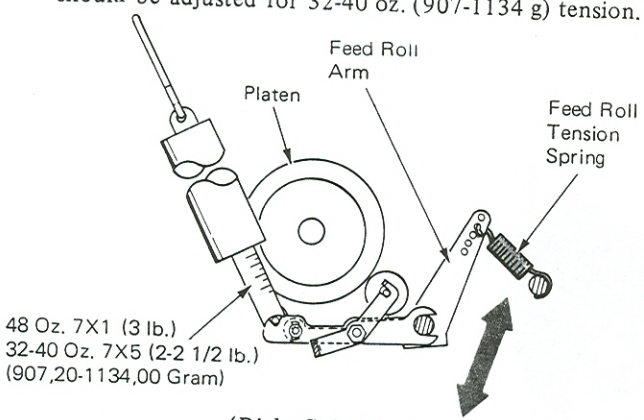

(Right Side View)

Feed Roll Tension ("A Frame") – Place the feed roll tension springs in the notch that will provide 32-40 oz. (907-1134 g) tension when measured at the front feed roll pivots.

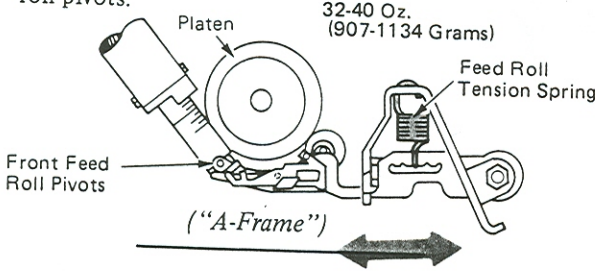

("A-Frame")

3. *Feed Roll End Play (Tie Rod Only)* – Adjust the feed roll assemblies for .010"-.015" (0.25-0.38 mm) side play of the feed rolls. Make this adjustment by moving the grip clips on the actuating shaft and moving the right front feed roll assembly on 7X1, and the left and right front feed roll assemblies on the XX5.

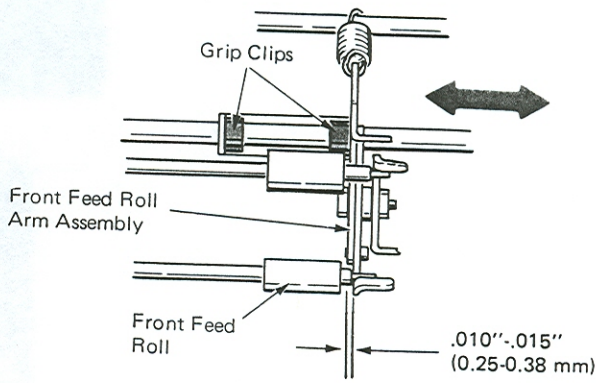

(Top View)

4. *Feed Roll Arms (Levels 1 And 2)* –

a. Adjust the feed roll arms to get .008"-.012" (0.20-0.30 mm) clearance between the front feed rolls and the platen when three tab cards are inserted between the rear feed rolls and the platen.

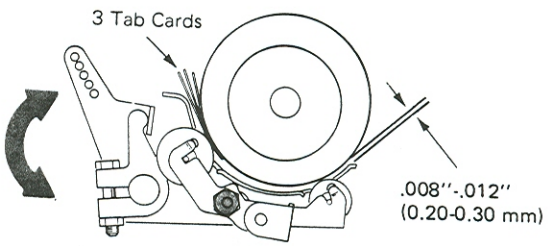

(Level 1 – Left Side View)

b. Adjust the front feed roll arms vertically to get a slight clearance between the rear feed rollers and the platen when two tab cards are between the front feed rollers and the platen. With one tab card between the front feed rollers and the platen, the rear feed rollers should have a slight drag on the platen.

An easy way to make this adjustment is as follows: Remove the paper deflector and insert three tab cards between the rear feed rollers and the platen. Loosen the adjusting screw. While pressing the front feed roll arm toward the platen, tighten the adjusting screw. Do the same for the opposite end. Then check for the above adjustment. The feed roll release arms must not limit the motion of the feed roll arms.

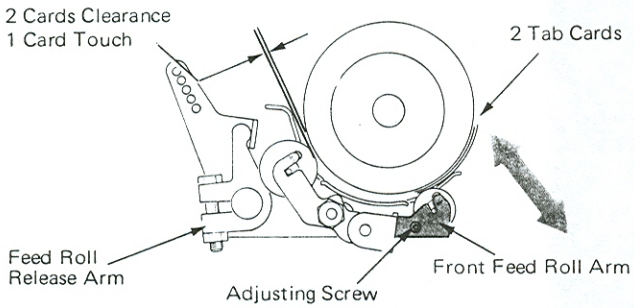

(Level 2 – Left Side View)

Feed Roll Arms ("A Frame" Only) – Adjust the feed roll arms front to rear so a clearance of .001"-.003" (0.03-0.08 mm) exists between the rear feed roll and the platen with five tab cards .035"-.037" (0.89-0.94 mm) between the platen and all the front feed rolls. With the cards removed, there should be no clearance.

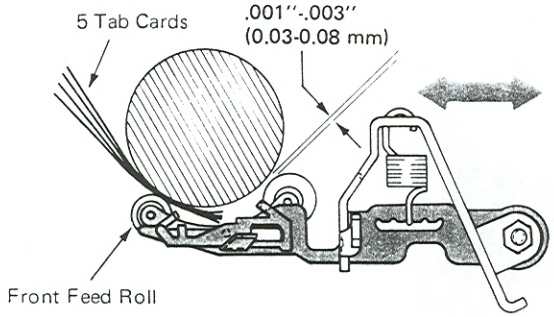

(Level 3 – Right Side View)

5. *Paper Release* – Adjust the feed roll release levers front to rear to get .055"-.065" (1.40-1.65 mm) clearance between the rear feed rollers and the platen when the feed rollers are released.

Excessive clearance can cause interference between the front feed roll and the carrier. Not enough clearance will not allow the feed rolls to release thick paper packs.

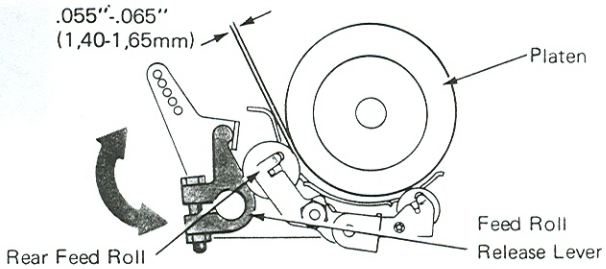

(Tie Rod – Left Side View)

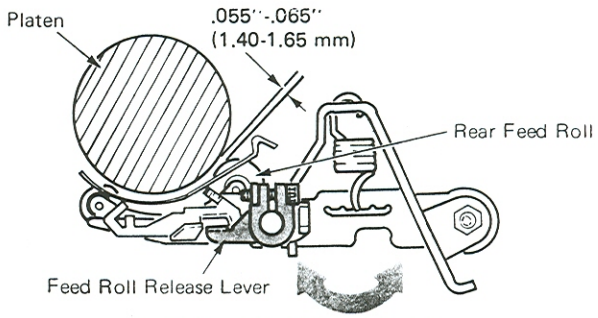

("A Frame" – Right Side View)

6. *Deflector* – Form the deflector supporting tabs on the front and rear feed roll arms to get clearance of .010"-.020" (0.25-0.51 mm) between the deflector and the platen. Three tab cards inserted between the platen and the deflector, at the front and rear, should provide a slight drag. No drag should be felt when one tab card is inserted.

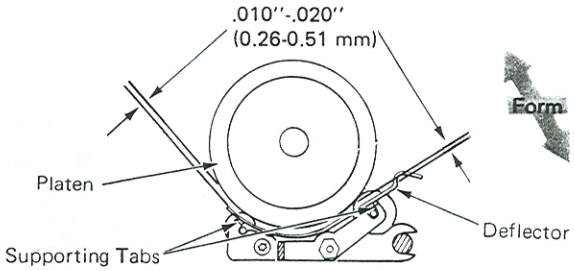

(Level 1 – Right Side View)

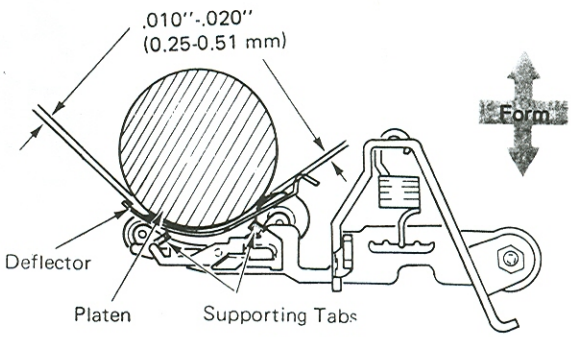

(Level 2)

("A Frame" – Right Side View)

7. *Paper Bail* – Adjust the grip clip on the paper bail pivot shaft to get .002"-.006" (0.05-0.15 mm) end play of the paper bail arm. If necessary, form the bail shaft for equal bail roll contact with platen.

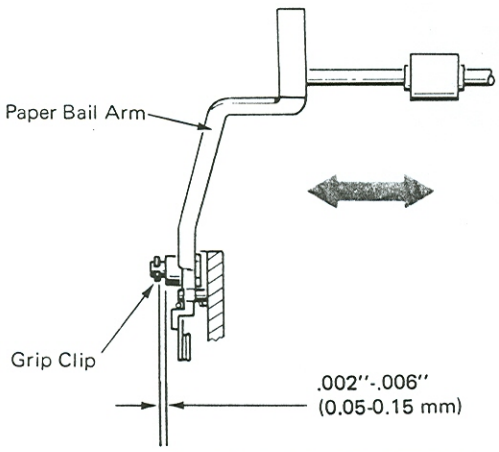

8. *Cardholder* – Adjust the cardholder brackets front-to-rear to get .005"-.015" (0.13-0.38 mm) clearance with the platen. The vertical adjustment should be such that the horizontal line is parallel and .002"-.005" (0.05-0.13 mm) below the feet of the typed characters when viewed from the operator's position. Adjust the cardholder left to right so the point of the letter *V* will align with the vertical lines on the cardholder.

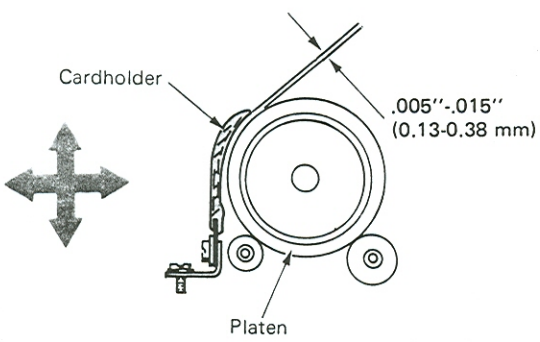

(Right Side View)

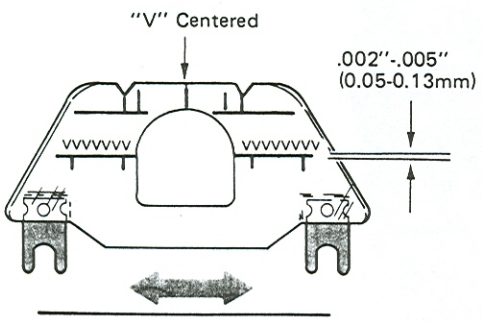

9. *Removable Print Shield* – If installed, form the shield actuating lever to satisfy the following conditions:

   a. So the shield is against the platen when the lever is in the rear, latched position.

   b. The print shield should rest against the element with the shield actuating lever in the forward or typing position. Fold the shield at the bottom, if necessary, to get this condition.

When the load lever of the film ribbon mechanism is activated, the shield will automatically be positioned to the rear. The ribbon must be installed between the shield and the typehead.

When the cardholder is adjusted for proper registration, the shield will be in the correct position. As an adjustment check, type an uppercase *T*, backspace and type an underscore. The *T* should be in the center and the underscore approximately .020" (0.51 mm) from the bottom of the hole.

NOTE: All operational control adjustments must be correct before making the following index adjustments.

Form

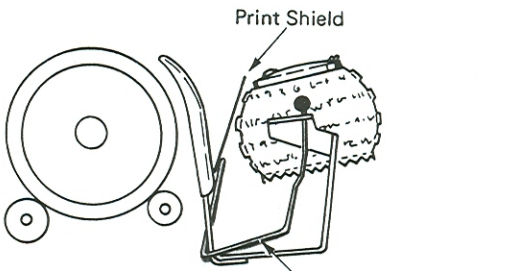

Lever Forward

(Left Side View)

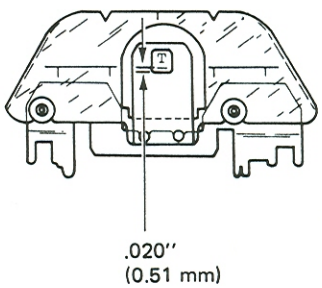

10. *Paper Table Arm* – Form the arms on the paper table to get minimum end play with no binds between the paper table arms and the paper table mounting bracket.

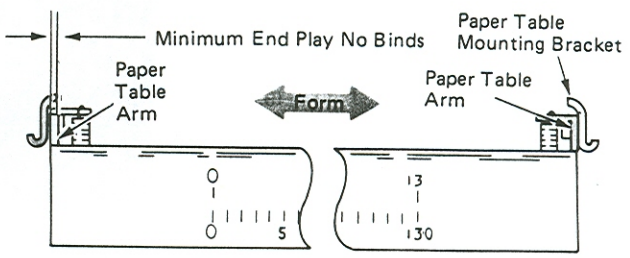

11. *Paper Table Mounting Brackets* – Adjust the paper table mounting brackets around their mounting screws so the foam on the paper table will contact the platen and the paper table is flat over its whole length.

NOTE: The operational shaft must be adjusted correctly before making the following index adjustments.

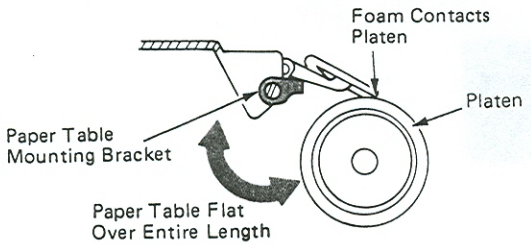

12. *Switch Bracket (RB/S)* – Adjust the switch bracket left or right to ensure that the lower index link does not bind in the slot in the index transfer bellcrank.

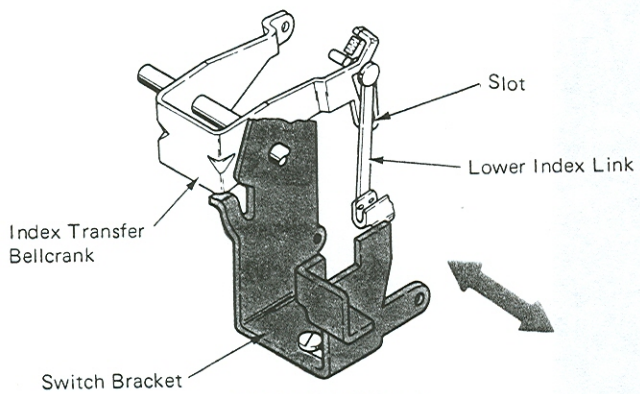

(Right Side View)

13. *Multiplying Lever Stop* – Adjust the multiplying lever stop front to rear to produce 3/8" (9.53 mm) (27, 32, 54T); 13/32" (10.32 mm) (24, 45, 48T); 11/32" (8.73 mm) (36T) motion to the index link when the carrier return index cam is operated to its high point (platen removed).

NOTE: The clevis should be in the rear hole of the multiplying lever for 36 tooth mechanisms.

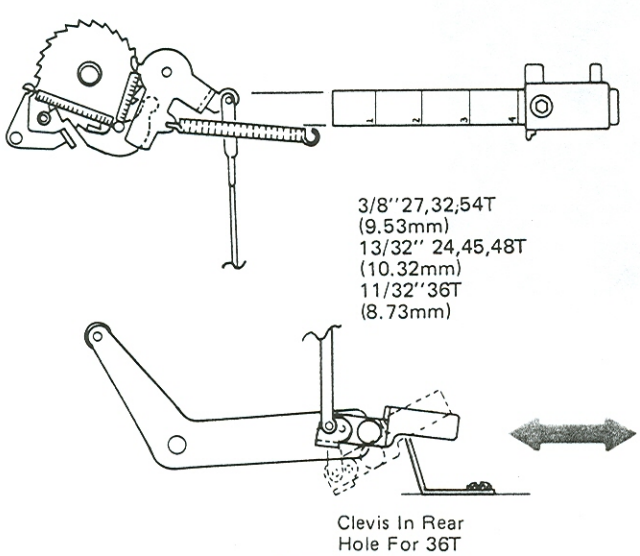

14. *Index Transfer Bellcrank Stop Lug (RB/S Only)* – Form the index transfer bellcrank stop lug to get a minimum end play, no bind condition between the stud on the lower index link and the lower horizontal edge of the slot in the index transfer bellcrank. This will ensure that the lower index link stud restores to the front of the slot after a backspace operation.

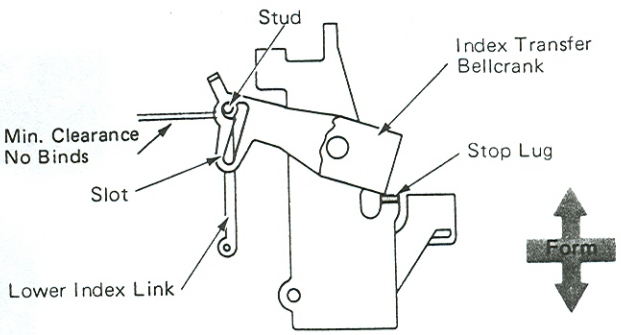

(Right Side View)

15. *Index Selector Cam – 27-Tooth Ratchet* – Adjust the index selector cam so a clearance of .010"-.040" (0.25-1.02 mm) can be observed between the working surface of the selector cam and the rear tip of the index pawl. To make this adjustment, place the index lever in the double-space position, press down on the index link until the index pawl is just bottomed in a ratchet tooth, and adjust the selector cam.

With the index lever in the single-space position, adjust the selector cam vertically so the index pawl is centered on the cam surface.

These adjustments must be considered together and readjusted until both are correct.

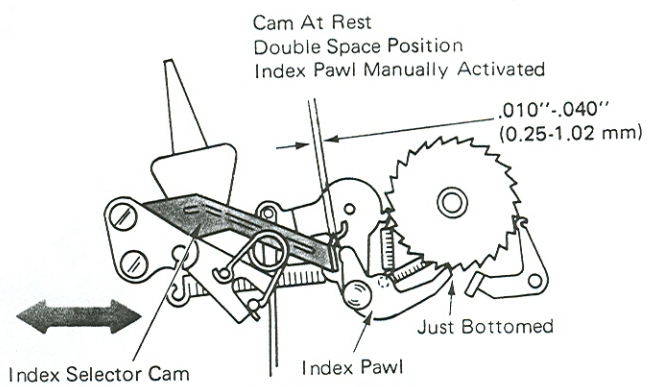

(Left Side View)

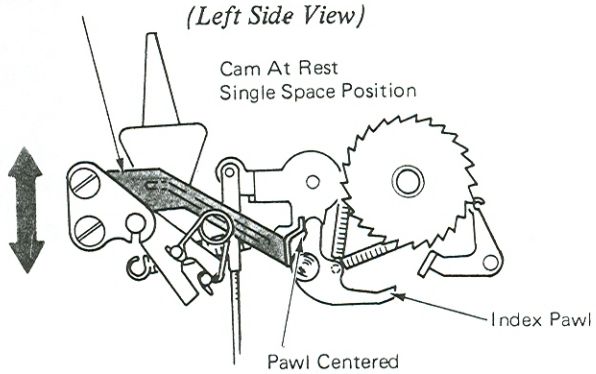

(Left Side View)

Index Selector Cam – 54-Tooth Ratchet – With the index lever in the 1-1/2 linespace position, press down on the index link until the index pawl is just bottomed in a ratchet tooth. Adjust the index selector cam so a clearance of .015"-.030" (0.13-0.76 mm) can be observed between the working surface of the selector cam and the rear tip of the index pawl.

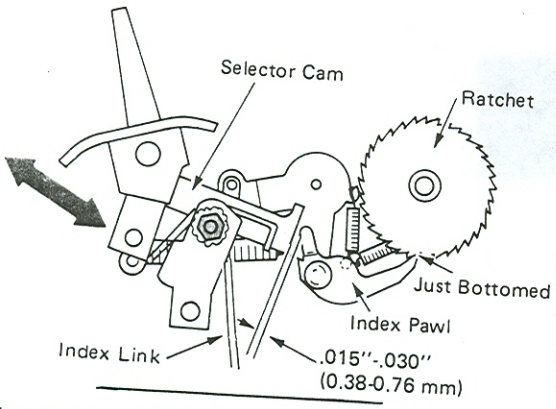

16. *Index Link* – As a preliminary step, loosen the platen overthrow stop and move it to the front of the machine. With the platen installed and the feed rolls engaged, hold the detent roller disengaged from the platen ratchet. Manually cycle a double line space operation. At the end of the cycle, allow the detent roller to enter the platen ratchet. Adjust the index link so the detent roller will bottom between the two ratchet teeth without causing any rotational movement of the platen. Adjust the index link clevis to get this condition, then shorten the link one turn to get .015"-.020" (0.38-0.51 mm).

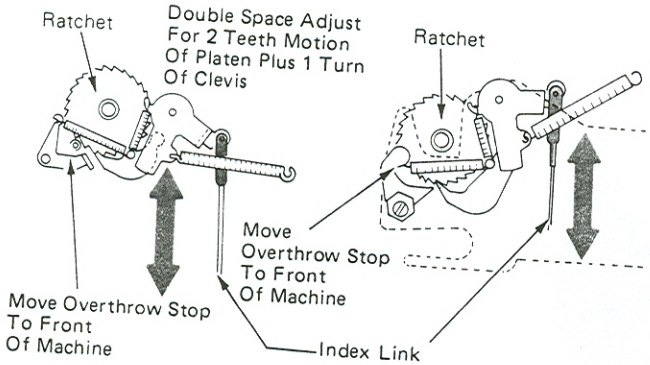

17. *Platen Overthrow Stop* – Adjust the platen overthrow stop front to rear to get minimum clearance with no binds between the index pawl and the platen overthrow stop with the index cam rotated to its high point.

NOTE: The following adjustments are for early level machines only.

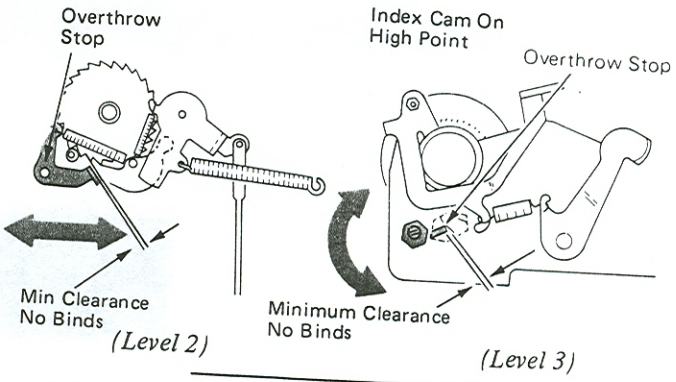

18. *Index Link And Index Stud (Level 1)* – As a preliminary setting, position the index link stud in the center of the slot in the pawl carrier. The following adjustments may require that the position be changed slightly. With the index selection lever in the single line space position and the carrier return/index cam latched at rest, insert four tab cards between the carrier return cam and the cam follower. Adjust the index link so the index pawl is bottomed in the ratchet against the tooth.

With the carrier return index cam on the high point, adjust the index stud front to rear to get one full tooth of motion from the index pawl after it starts to drive the platen. The upper index pawl stop must allow the index pawl to bottom in the ratchet.

NOTE: Adjustment of the index link and index link stud must be considered together. Adjust and check each one until both are correct.

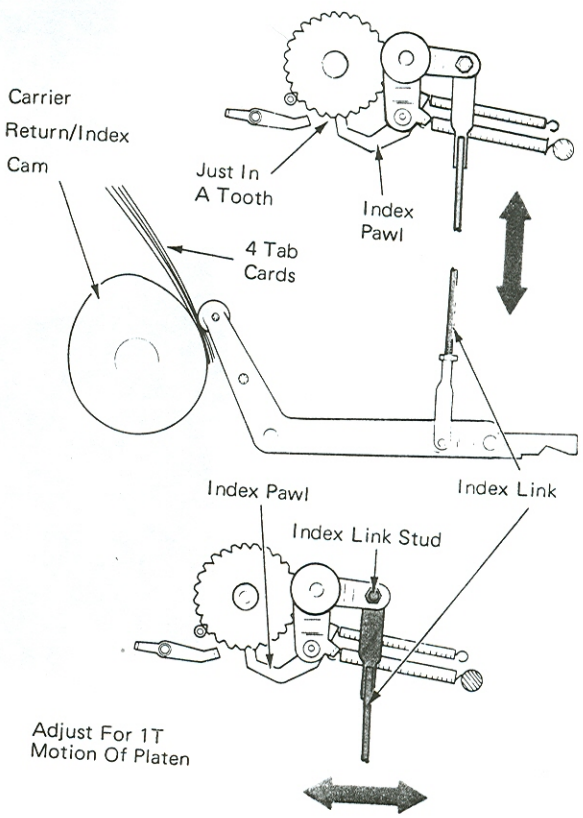

19. *Upper Index Pawl Stop (Level 1)* – With the index cam latched at rest, adjust the upper index pawl stop to get .015"-.030" (0.38-0.76 mm) clearance between the index pawl and the platen ratchet.

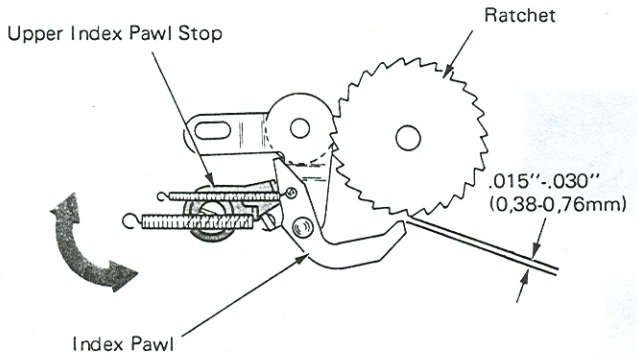

(Left Side View)

20. *Multiplying Control Lever (Level 1)* – Position the multiplying control lever stop front to rear so the elongated hole is centered on its mounting stud. This is a preliminary adjustment and may need to be changed slightly.

Adjust the multiplying control lever vertically to just clear the bottom edge of the multiplying lever with the carrier return index cam at rest. Keep the high point of the eccentric toward the front of the machine.

Adjust the multiplying control lever stop front to rear to get two full teeth of motion from the index pawl after it begins to drive the platen. Be sure that the index motion is not limited by the platen overthrow stop.

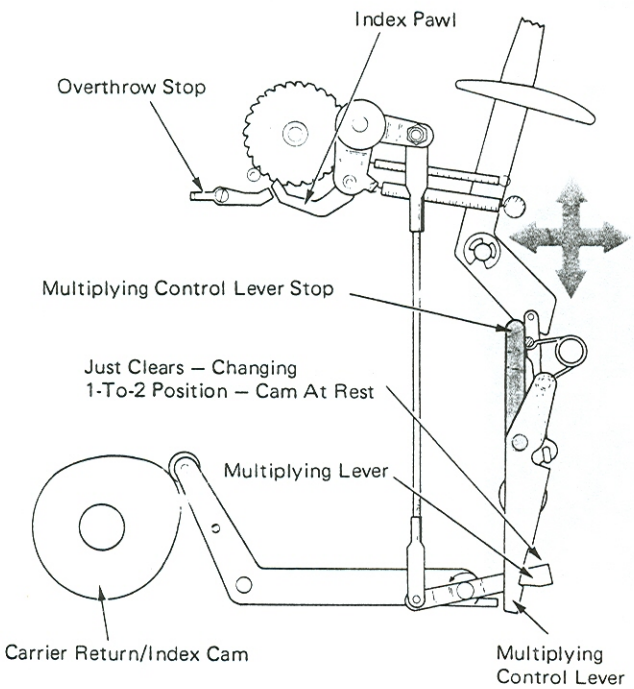

(Right Side View)

21. *Platen Overthrow Stop (Level 1)* – Adjust the platen overthrow stop front to rear to get a clearance of .005" (0.13 mm) between the index pawl and the platen overthrow stop with the index cam rotated to its high point.

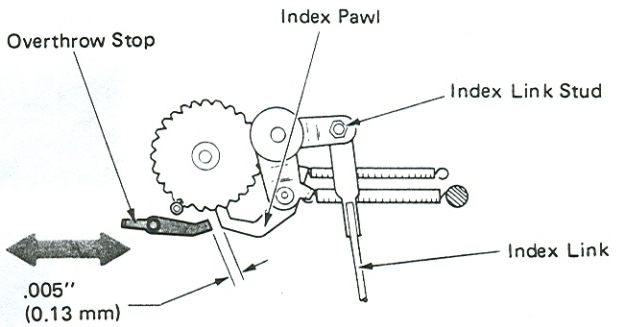

(Right Side View)

22. *Index Selector Lever* – Adjust the index selection lever link so that the index selection lever aligns with the double mark on the case when the lever is in double space position.

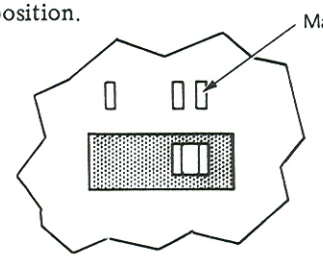

(Top View)

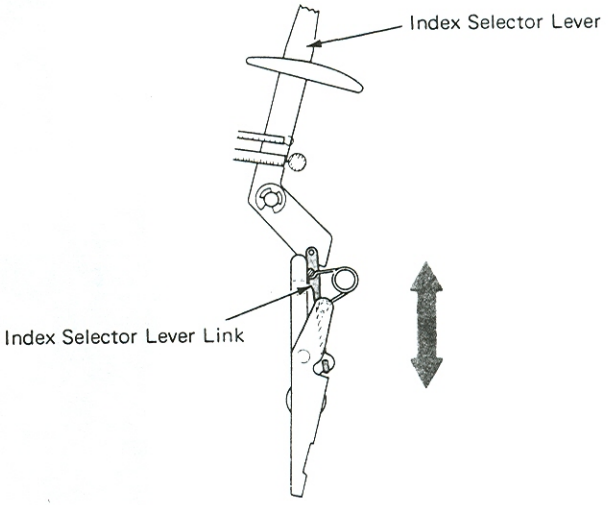

(Right Side View – Level 1)

23. *Line Position Reset Lever "Selectric" Typewriter* – Form the right-hand extension of the line position reset lever to get .001"-.010" (0.03-0.25 mm) clearance between the detent roller and the lever with the lever at rest. Form the detent arm so the lever overlaps the detent roller by the thickness of the lever. Machines equipped with a 54-tooth detent arm should have .005"-.015" (0.13-0.38 mm) between the lever and the "C" clip.

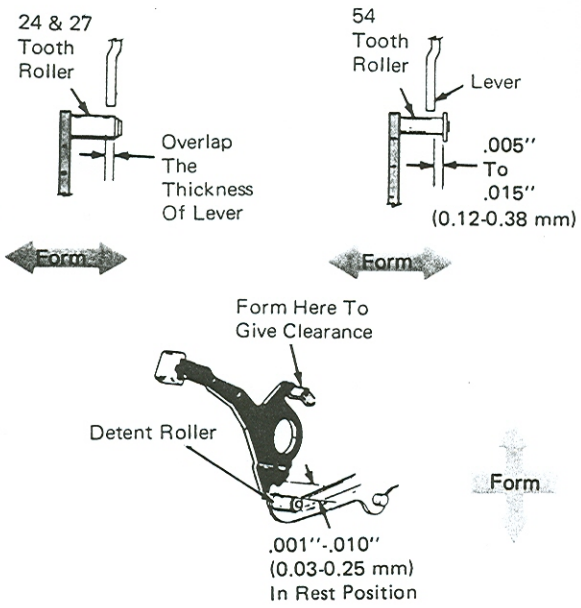

Line Position Reset Lever "Selectric" II Typewriter – Form the rear extension of the detent arm to clear the lower lug of the line position reset lever.

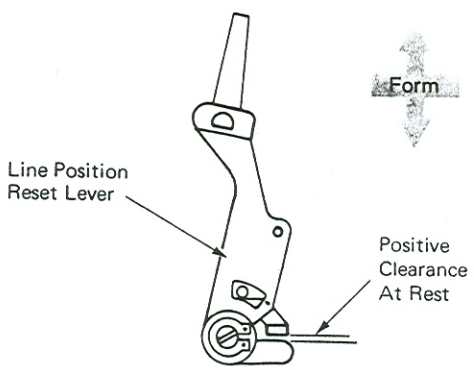

(SE II Right Side View)

---

24. *Left Platen Knob* – Position the knob left or right to get .158"-.218" (4.02-5.54 mm) clearance between the left-hand platen bushing and the platen knob.

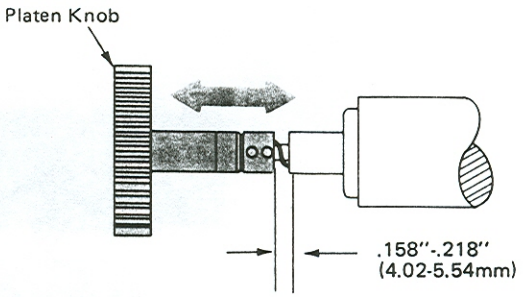

---

25. *Right Platen Knob* – Position the knob left or right to get minimum end play and no binds between the right-hand platen bushing and the knob. The bushing should turn freely.

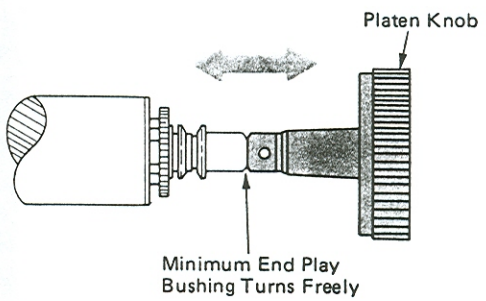

BLANK PAGE IN MANUAL FOR ADDING NOTES

FILM RIBBON OPERATIONAL THEORY

The purpose of the film ribbon mechanism is to lift the ribbon into the path of the typehead during a print operation and to feed the ribbon from the supply spool to the take-up spool.

The film ribbon mechanism mounts on and moves with the carrier assembly. The supply spool of ribbon mounts on a permanent supply spool on the left side of the carrier. Due to the inner-connection between the plastic core of the supply spool and the permanent supply spool, both spools rotate as a unit during a ribbon feed operation. As the ribbon comes from the supply spool, it threads around the ribbon circuit to the take-up spool. The take-up spool is a throw away, clear spool mounted on the right side of the carrier. After the ribbon has been used and fed to the take-up spool, both the take-up spool and the plastic core from the supply side are removed and thrown away. The new ribbon to be installed comes equipped with its own take-up spool attached to the end of a clean leader (Figure 1).

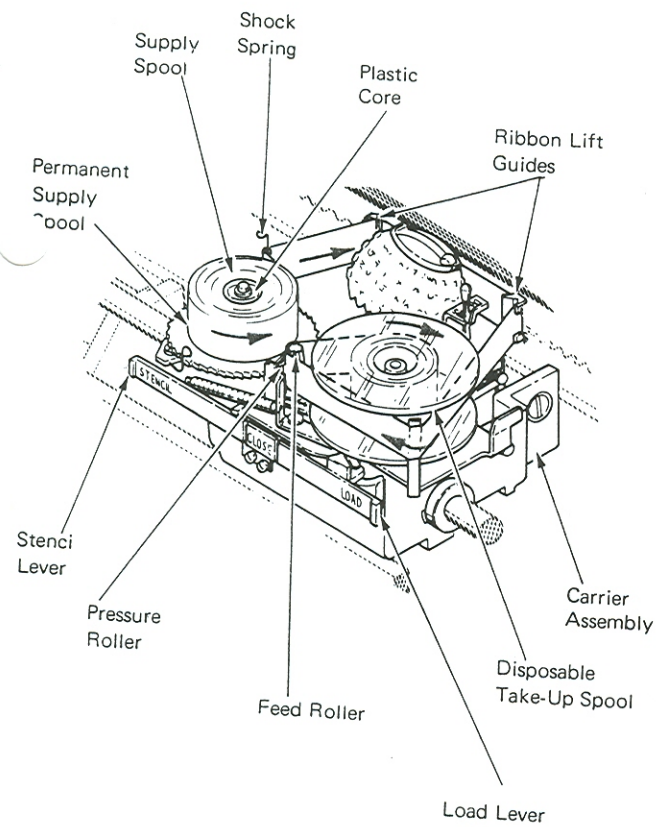

Figure 1 – Film Ribbon Mechanism

RIBBON FEED

The ribbon feed cam, which is keyed to the print sleeve, supplies the motion for ribbon feed. The motion from the cam is transmitted through an adjustable stud to the cam follower, which drives the feed pawl (Figure 2). The cam follower mounts on a bracket that is attached to the front carrier casting by two hex-head screws. An extension spring connects to one of these screws and loads the cam follower against the cam. The feed pawl mounts at the top of the cam follower by a shouldered rivet and is spring loaded into engagement with the ribbon feed and lift wheel.

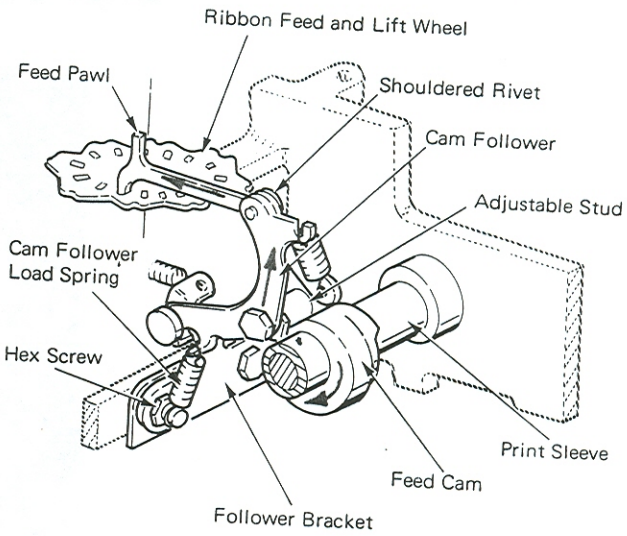

Figure 2 – Ribbon Feed Mechanism (Half Cycle Position)

The ribbon feed and lift wheel contains sixteen feed windows (Figure 3). During the first half of a print cycle, the cam follower will go to the low point of the feed cam under spring tension. The feed pawl attached to the top of the cam follower will move to the rear, out of one window and into the next. As the feed cam follower and feed pawl are powered forward, the feed and lift wheel will be rotated clockwise. The wheel will rotate one window during each print cycle.

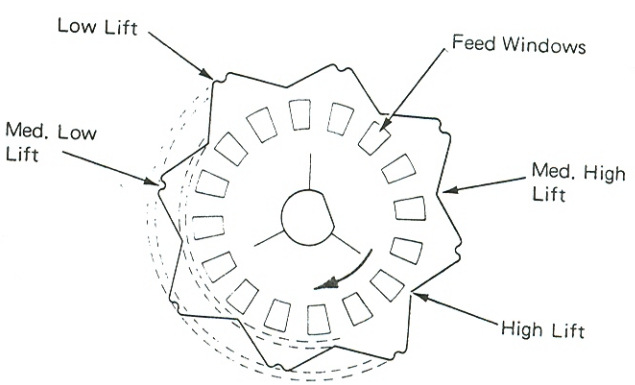

Figure 3 – Ribbon Feed & Lift Wheel (Top View)

A ribbon feed roller is mounted to the top of the feed and lift wheel and is held by a left-hand threaded screw (Figure 4). The feed roller rotates clockwise each time the feed and lift wheel is rotated. The used ribbon passes around the feed roller just before winding on the take-up spool. A pressure roller holds the ribbon against the feed roller so that the amount of rotation of the feed roller will determine how much ribbon is fed on each cycle.

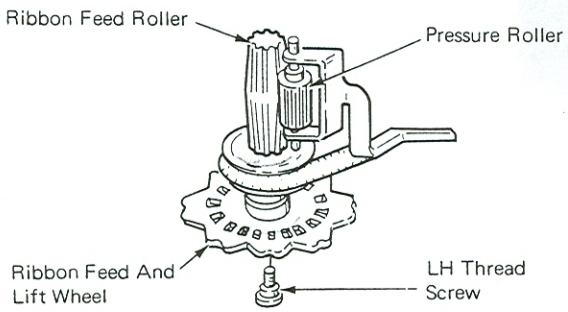

Figure 4 – Ribbon Feed Roller

RIBBON TAKE-UP

After the ribbon leaves the feed roller, the used ribbon is wound on the clear take-up spool. The take-up spool receives its motion from the feed mechanism by a friction-type spring drive system (Figure 5).

A drive pulley located directly below the feed roller rotates with the feed roller during a ribbon feed operation. This drive pulley supplies the motion to the take-up pulley through a drive spring. The take-up pulley, driven by the drive spring, rotates about the take-up spool pivot stud and is held in place by a "C" clip. The shape of the groove in the take-up pulley is designed slightly different from that of the drive pulley. This is to allow all of the necessary slippage of the drive spring to occur at the take-up pulley and not at the drive pulley. This slippage is necessary to ensure the take-up spool will wind all of the ribbon. Two hooked lugs on the top face of the take-up pulley fit into slots in the bottom of the clear take-up spool. These lugs provide a locking connection between the take-up pulley and the take-up spool.

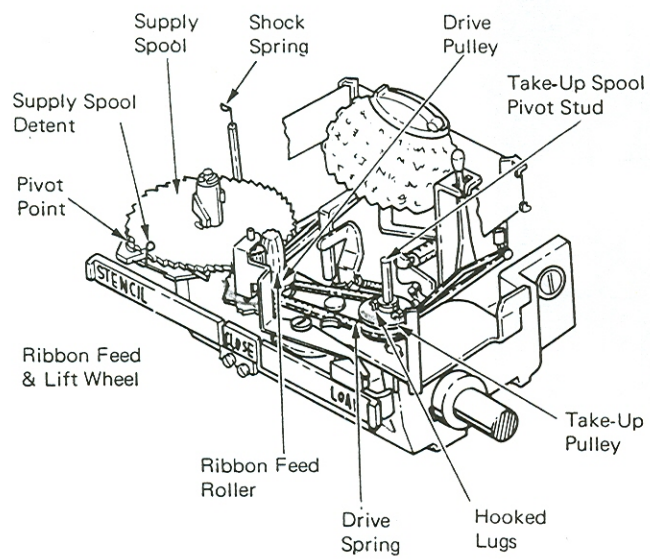

Figure 5 – Take-Up Spool Drive

To maintain a reliable ribbon tracking characteristic from the supply spool to the feed and pressure rollers, the ribbon must be kept slightly tight through the ribbon path. Any slack in the system will affect the tracking of the ribbon. The ribbon is kept tight by means of a shock spring and detent. As the ribbon is pulled through by the feed roller, the supply spool detent, located on the front of the shock spring, releases the supply spool to allow the ribbon to feed (Figure 6).

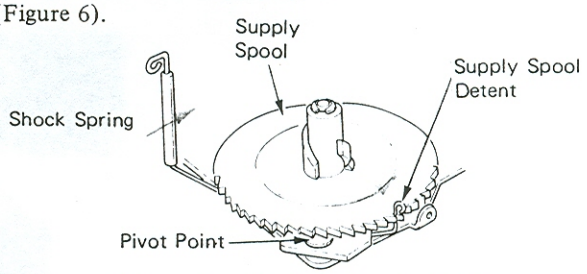

Figure 6 – Shock Spring And Detent

RIBBON LIFT

To get the desired number of characters per spool of ribbon, a 9/16" (14.3 mm) wide ribbon is used. By changing the ribbon lift position for each character, a greater number of characters can be typed on a given length of ribbon.

The ribbon lift mechanism consists of a ribbon lift cam, a cam follower, a control mechanism, and the ribbon lift guide assembly. The lift mechanism is mounted to the carrier and moves with it. The ribbon lift cam is a single side cam that is attached by setscrews to the left-hand side of the print sleeve. Each time a print cycle occurs, the cam makes one complete revolution (Figure 7).

The ribbon lift cam follower pivots on the carrier assembly above and to the rear of the cam. Each revolution of the cam raises the cam follower. The end of the ribbon lift control link fits into an elongated slot in the cam follower. The ribbon lift guide rests on the control link and pivots at the front of the carrier casting. As the cam follower is raised, the control link forces the ribbon lift guide assembly to pivot at the front and riase the rear of the assembly. A flat link from each side of the ribbon lift guide attaches to two pins at the front of the carrier to maintain the ribbon lift guide in a vertical position (Figure 7).

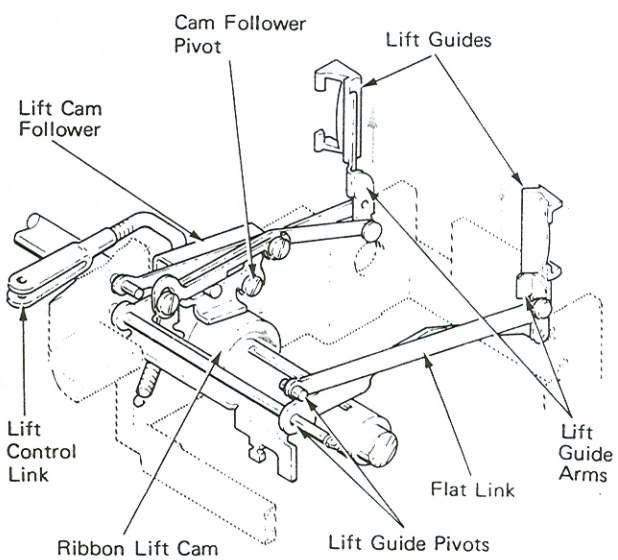

Figure 7 – Ribbon Lift Mechanism

The four lift positions set by moving the control link are indicated by "A," "B," "C" and "D" (Figure 8A).

Positions "A" and "C" are low lift positions while "B" and "D" are high lift positions. These four lift positions occur in a particular order during a typing operation. It takes four print operations to complete a lift cycle, which is from "A" to "B" to "C" to "D." On the fifth print operation, the lift cycle begins all over again with lift position "A." Changing the location of the lift control link in the slot of the cam follower produces these lift positions.

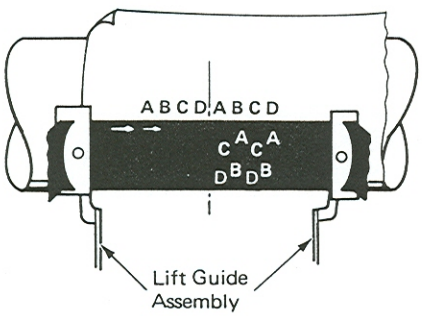

Figure 8A – Typed Sample

Each of these cam surfaces aligns with one of the feed windows to produce the four lift positions as the wheel rotates for each ribbon feed operation (Figures 8B and 8C).

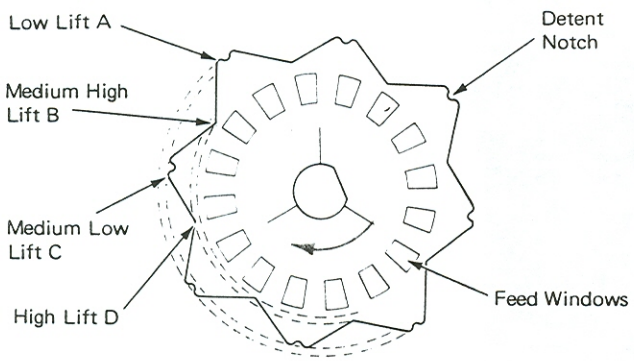

Figure 8B – Ribbon Feed And Lift Wheel (Top View)

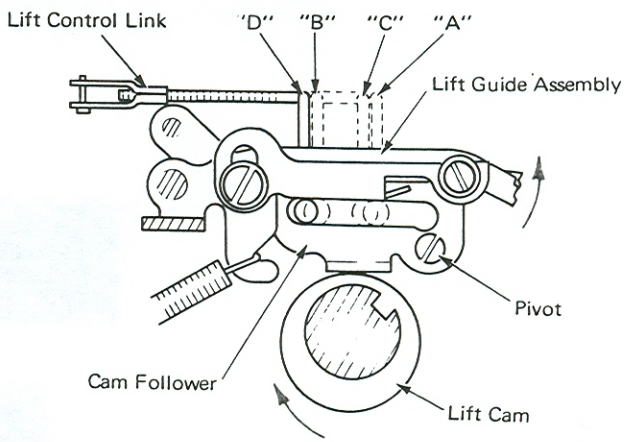

Figure 8C – Ribbon Lift Positions (Right Side View)

The motion produced by the cam surfaces on the ribbon feed and lift wheel is transmitted to the lift control link by the ribbon lift control lever. The lift control lever is mounted to the front of the carrier by a shouldered screw and is spring loaded against the cam sides of the feed and lift wheel. During the early part of a print cycle, the feed and lift wheel rotates counterclockwise with the feed pawl. This happens because the feed pawl is pulled out of the feed window as it moves toward the rear of the machine. To prevent the feed and lift wheel from rotating counterclockwise, the ribbon lift control lever serves to detent the feed and lift wheel. This is done by a detent notch cut on the high sides of the ribbon feed and lift wheel (Figure 9).

The selected ribbon lift position for each print operation is always established by the ribbon feed operation from the previous print cycle. This is because the rotation of the feed and lift wheel does not occur until after the typehead has printed.

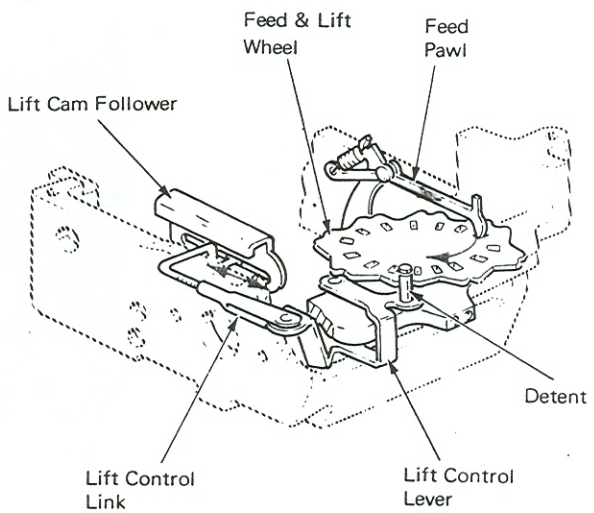

Figure 9 – Lift Control Lever

STENCIL CONTROL

When the machine is used for typing stencils, the ribbon feed and lift operation must be locked out. This is done by pushing the stencil lever, located on the front on the carrier, to the rear (Figure 10).

The lockout of the feed mechanism is done through a lug on the stencil lever. In the stencil position, the lug pivots to the right into the path of the vertical lug of the feed pawl. Ribbon feed is interrupted because the feed pawl is not allowed to move to the rear and drop into the next feed window.

Lockout of the lift operation is done by a cam surface on the left end of the stencil lever. As the lever is pushed into the stencil position, the lift control is moved away from the feed and lift wheel. This causes the control link to move to the rear of the slot in the cam follower where no lift motion will be produced to the ribbon lift guide assembly. The stencil lever must be pulled forward to restore ribbon feed and lift.

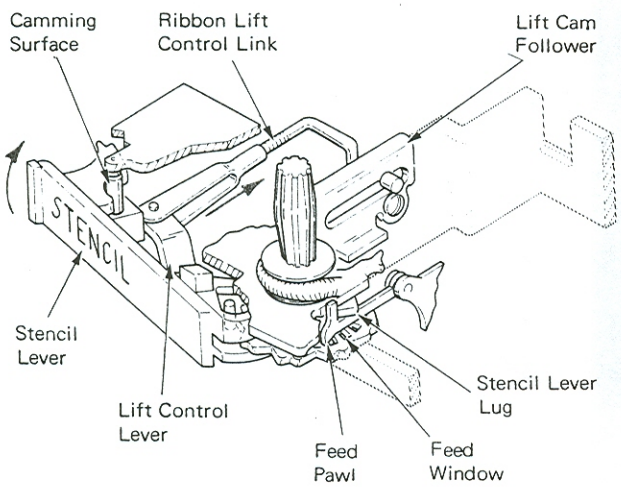

Figure 10 – Stencil Lockout

RIBBON LOAD

When the operator desires to change the ribbon, the load lever is pushed to the rear into its load position. This causes the ribbon lift guide assembly to rise above the typehead so the ribbon may be easily inserted through the guides. Latching the load lever in its load position causes the lower extension of the load lever to contact an extension on the lift guide assembly and push it upward. At the same time, an extension on the pressure roller lever is contacted by the upper part of the load lever and pivots the pressure roller away from the feed roller. The operator may now install a ribbon with nothing in the way (Figure 11).

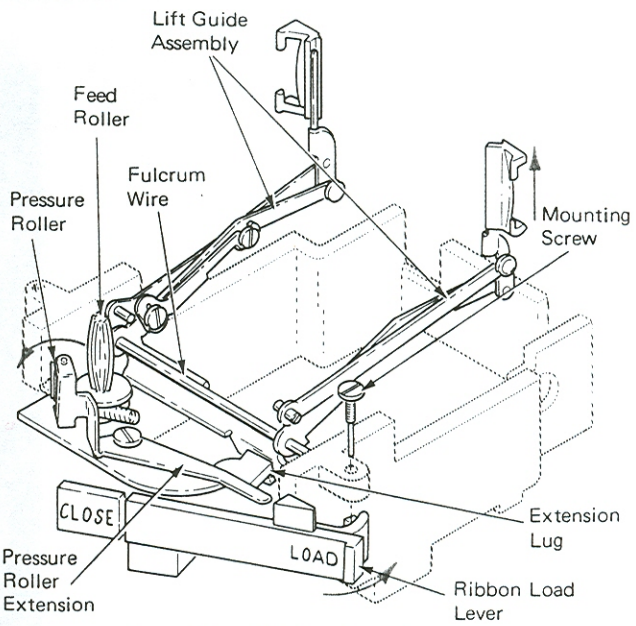

Figure 11 – Ribbon Load Position

NOTE: Lower extension of right-hand ribbon plate mounting screw is used to lock load lever latched in load position.

The level 1 film ribbon mechanism differs slightly from the mechanism just described. A supply drag lever is in contact with the ribbon supply spool (Figure 12).

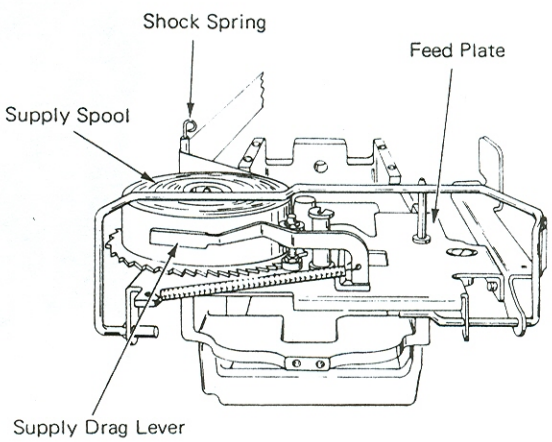

Figure 12 – Supply Drag (Level 1)

RIBBON FEED

During a feed operation, the supply spool brake is mechanically disengaged by the ribbon lift mechanism (Figure 13). The upper extension of the lift guide plate contacts the brake actuating lever when the lift guide is in the raised position. As the brake actuating lever pivots about its pivot point, it pushes the supply spool brake out of engagement with the supply spool.

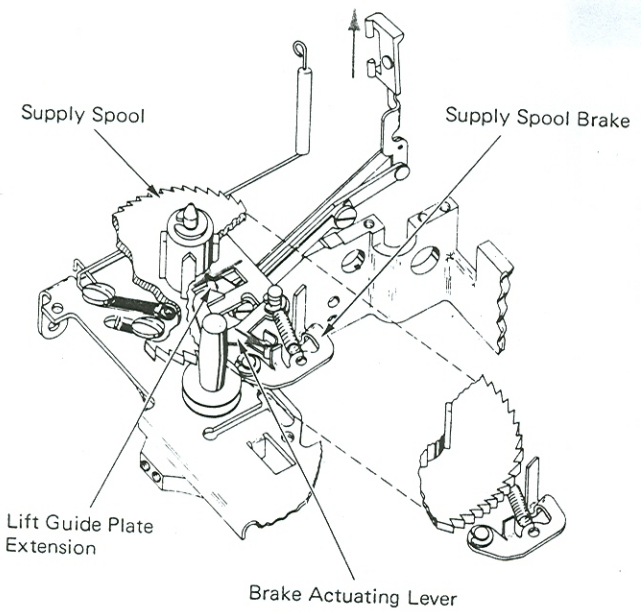

Figure 13 – Ribbon Shock Spring And Brake Actuating Lever (Level 1)

To prevent the ribbon feed and lift wheel from rotating backward during a feed operation, a detent spring falls into the feed windows of the ribbon feed and lift wheel (Figure 14).

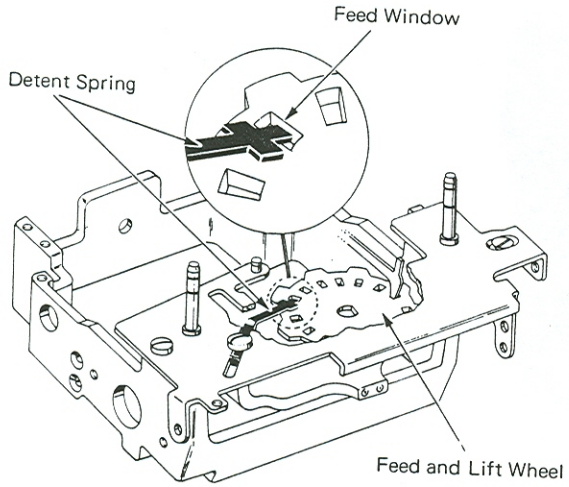

Figure 14 – Feed & Lift Wheel Detent Spring (Level 1)

STENCIL LOCKOUT

In the stencil position, the feed pawl shield is rotated under the feed pawl to prevent the feed pawl from operating in the feed windows (Figure 15). Lockout of the lift mechanism is done in the same way as the present mechanism. However, the parts design is slightly different.

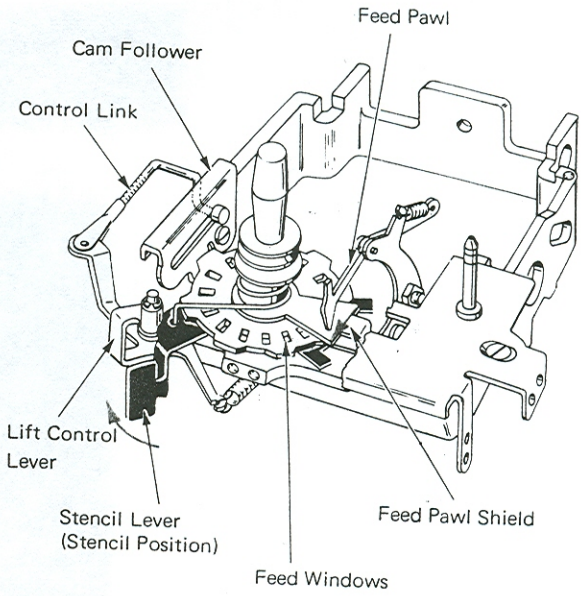

Figure 15 – Stencil Lockout (Level 1)

RIBBON LOAD

The ribbon load operation is started by a ribbon load bail (Figure 16). A link is connected between the ribbon load bail and the load lever. The load lever raises the lift guide assembly in the same way as the current load lever.

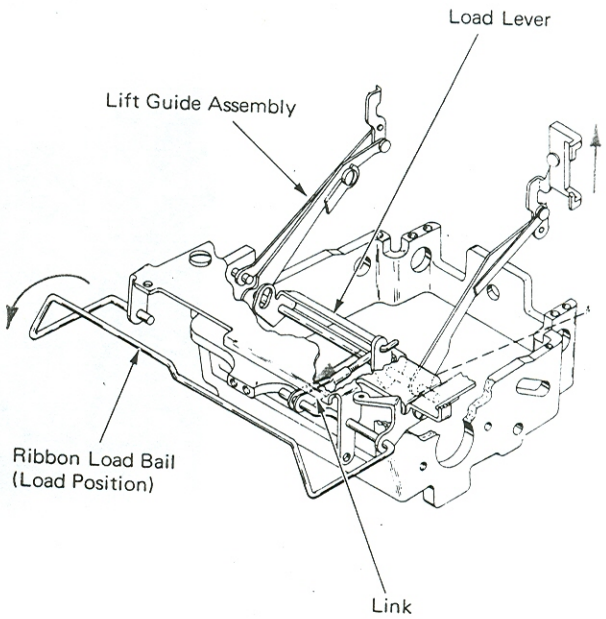

Figure 16 – Ribbon Load Operation (Level 1)

An adjustable pressure roller release arm is attached to the load lever to release the pressure roller in the load position (Figure 17). The pressure roller release arm pushes against the pressure roller lever. As the pressure roller lever pivots away from the feed roller, it also pushes the supply drag lever away from the supply spool. All interference is removed to allow the operator to install a new ribbon.

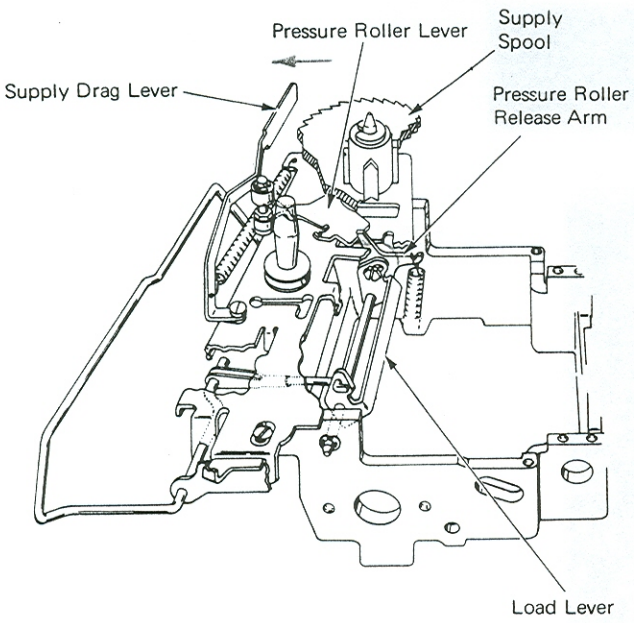

Figure 17 – Pressure Roller Release (Level 1) (Right Side View)

FILM RIBBON ADJUSTMENTS

1. *Ribbon Lift Cam* – Adjust the ribbon lift cam so the aligning slot is aligned with the front edge of the print sleeve keyway.

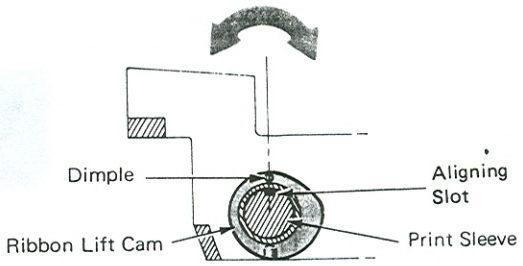

(Right Side View)

2. *Ribbon Feed Cam Follower Bracket* – With the nylon carrier pad against the carrier casting, the ribbon feed cam follower bracket should be centered left to right in its mounting hole. Keep the bottom of the bracket parallel to the carrier pad.

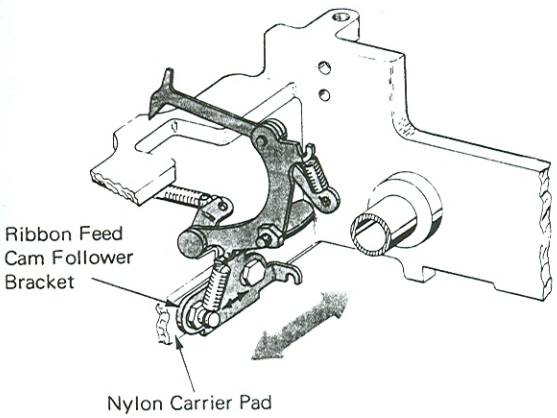

(Rear View)

3. *Ribbon Plate* – Adjust the ribbon plate left to right so the ribbon feed pawl is centered in the operating slot. The ribbon feed pawl must move freely front to rear in its slot.

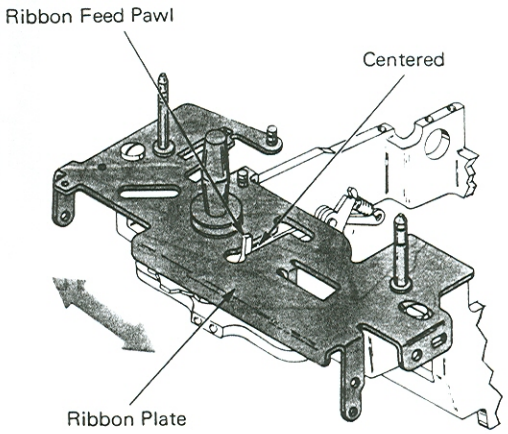

4. *Ribbon Feed Cam Follower Stud (Level 2)* – Hand cycle the machine and observe the lift control lever stud as it moves from the low point to the high point on the ribbon feed and lift wheel. Adjust the ribbon feed cam follower eccentric stud so the ribbon lift control lever stud overthrows the detent notch in the ribbon feed and lift wheel by .005"-.015" (0.13-0.38 mm).

Level 1 – Machines not equipped with the detent positions on the ribbon feed and lift wheel should be adjusted so the lift control lever roller is centered on the high surface of the ribbon feed and lift wheel.

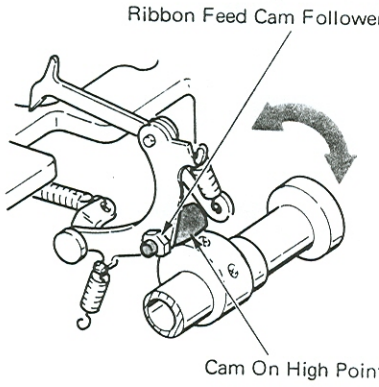

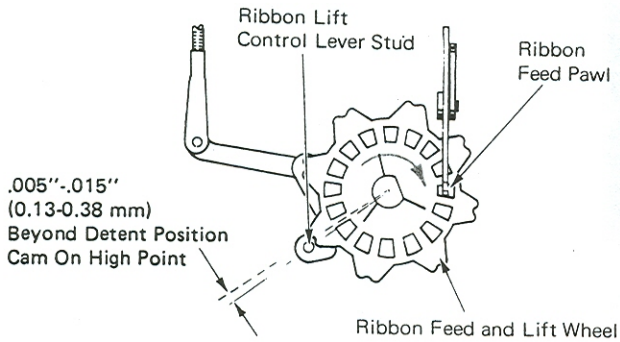

(Level 2 – Top View)

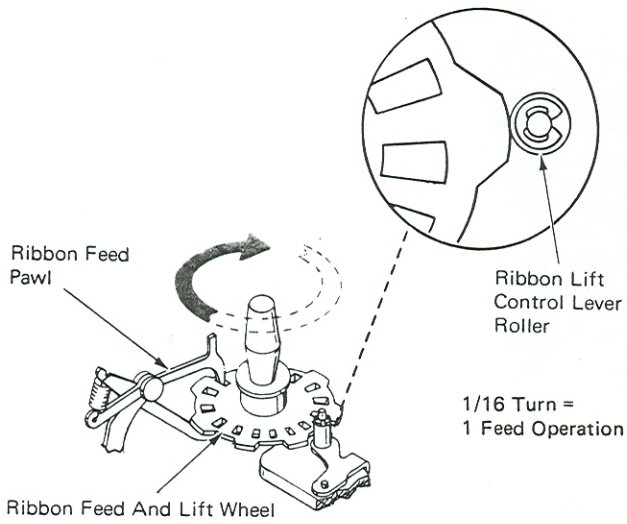

(Level 1 – Top View)

5. *Ribbon Feed and Lift Wheel Detent Spring (Level 1 Only)* – Adjust the detent spring so that the ribbon feed and lift wheel moves .015" (0.38 mm) after the detent spring drops into a feed window. To check the adjustment, hand cycle the machine and observe the detent spring as the ribbon lift control lever roller moves from the low point to the high point on the ribbon feed and lift wheel.

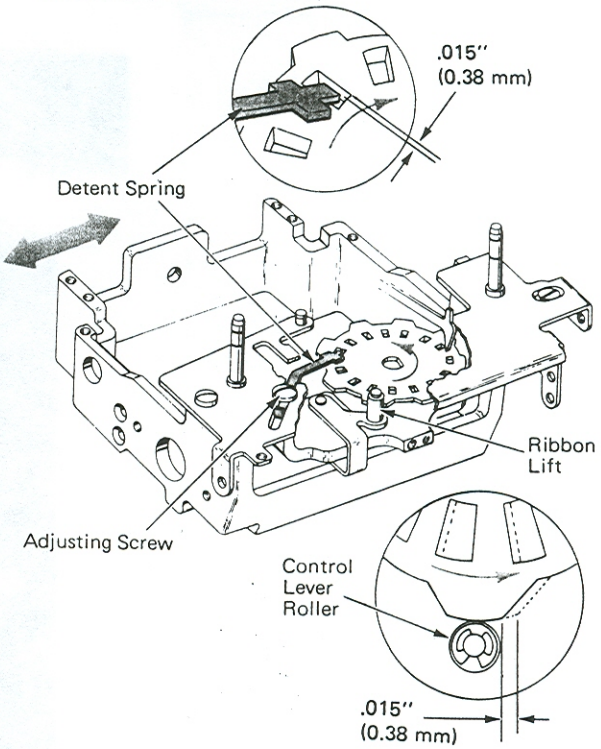

6. *Brake Actuating Lever (Level 1 Machines Only)* – Form the lug on the brake actuating lever so the supply spool brake is allowed to just bottom in the ratchet teeth of the supply spool when the machine is at rest.

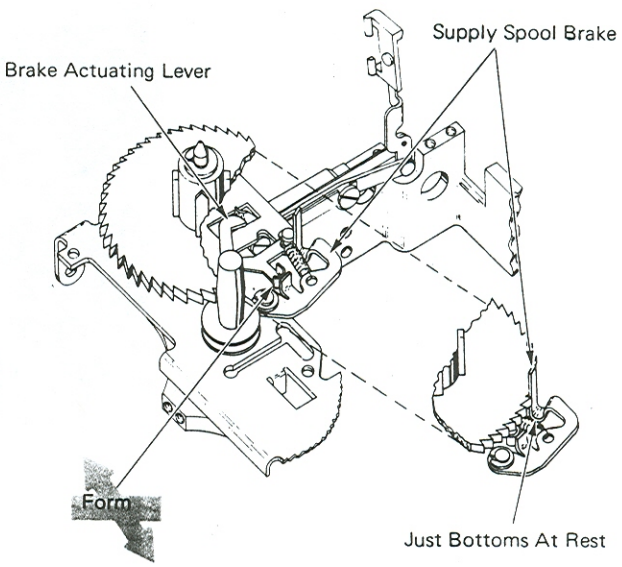

7. *Ribbon Lift Guide Plate* – With the ribbon lift cam follower on the low point of the ribbon lift cam, position the lift guide plate on the arm of the lift guide assembly to satisfy the following conditions:

   a. Position the lift guide plate vertically so the rear of the lift guide assembly rests .030" (0.76 mm) above the carrier casting when the stencil lever is not in the stencil position.

      This position of the lift guide plate may be checked by observing the lift guide assembly while manually pushing the control link all the way to the rear into its stencil position. The guide assembly should drop .030" (0.76 mm) at the rear if the adjustment is correct.

   b. Position the lift guide plate horizontally so its bottom surface is parallel to the slot in the cam follower.

      The parallel adjustment of the lift guide plate may be checked in the following way. With the cam follower resting on the low point of the lift cam, disconnect the control link and manually slide the link front to rear through the four lift positions. If the plate is parallel, no movement will be produced to the ribbon lift guide assembly while sliding the link front to rear. Do not slide the link into the stencil position while making this check.

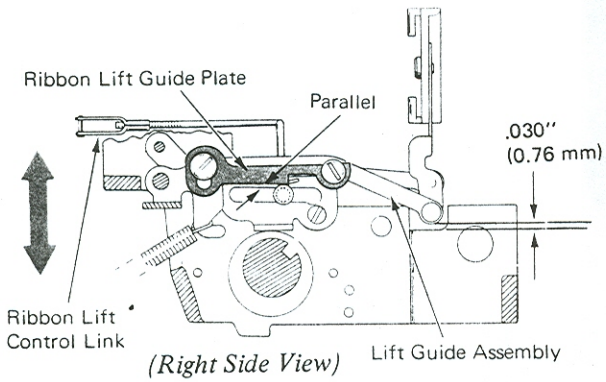

(Right Side View)

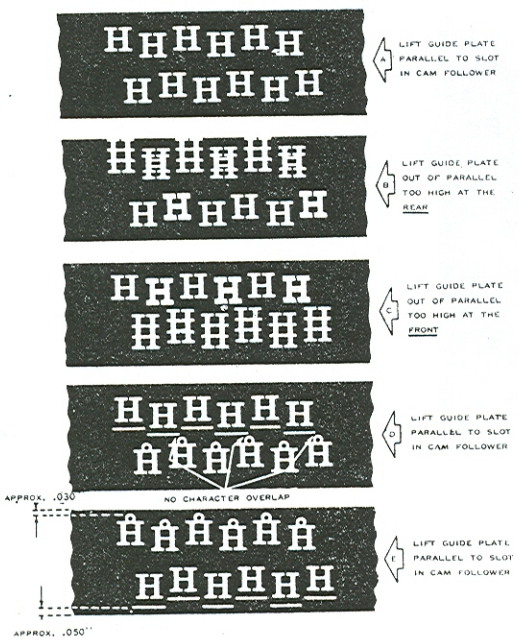

8. *Lift Control Link* – Adjust the clevis on the ribbon lift control link so the lowest underscore prints .035"-.065" (0.89-1.65 mm) from the bottom edge of the ribbon. The degree character should be at least .030" (0.76 mm) from the top of the ribbon.

NOTE: The adjustment of the ribbon lift control link positions the lift pattern on the ribbon and does not have any effect on the distance between each of the four lift positions in the pattern.

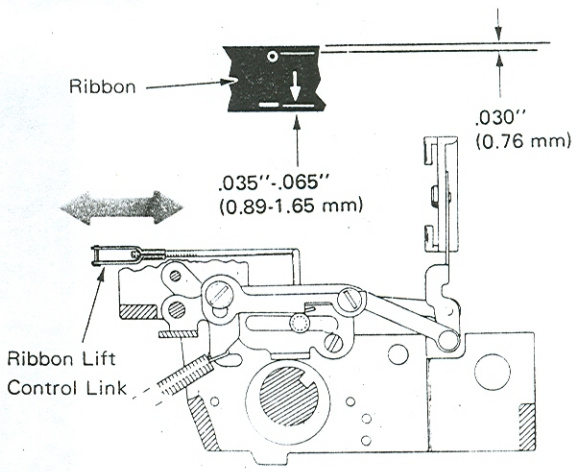

(Right Side View)

Adjustments 9 through 15 are for level 1 mechanisms only.

9. *Load Lever Link (Level 1 Only)* – Adjust the load lever link to raise the ribbon lift guide assembly as high as possible without binding off on either the ribbon feed plate or the take-up spool when the load bail is in the load position.

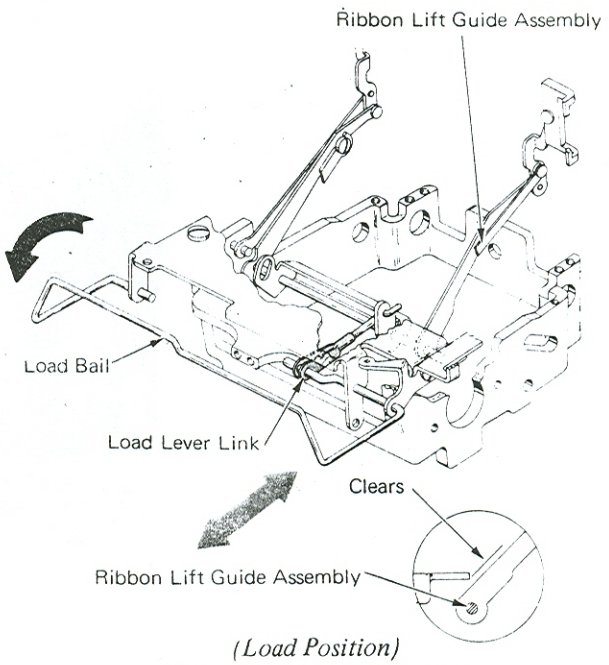

(Load Position)

10. *Pressure Roller Release Arm (Level 1)* – Adjust the pressure roller release arm below its binding screw, located on the left end of the load lever, so the supply drag lever will be pushed forward by the pressure roller to just clear the front edge of the supply spool.

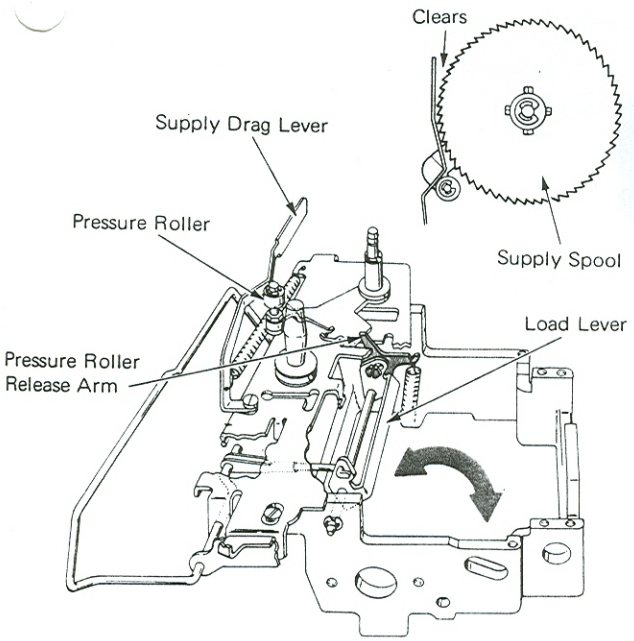

(Level 1)

11. *Supply Spool Drag Spring (Level 1)* – Adjust the supply spool drag spring to satisfy the following conditions:

a. Position the drag spring parallel to the front edge of the ribbon feed plate.

b. With the "C" clip removed, the drag spring should raise the supply spool so half of the pointed surface on top of the pivot stud is extended above the top face of the spool. Form the drag spring up or down to get this condition.

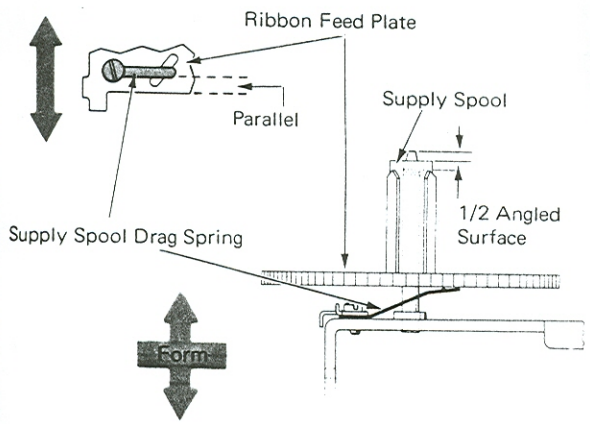

(Level 1 – Front View)

12. *Shock Spring (Level 1)* – Position the shock spring so it is approximately .040" (1.02 mm) to the right and parallel to the edge of the ribbon feed plate. The shock spring should be formed to make the roller on the shock spring 10 degrees to the left of vertical.

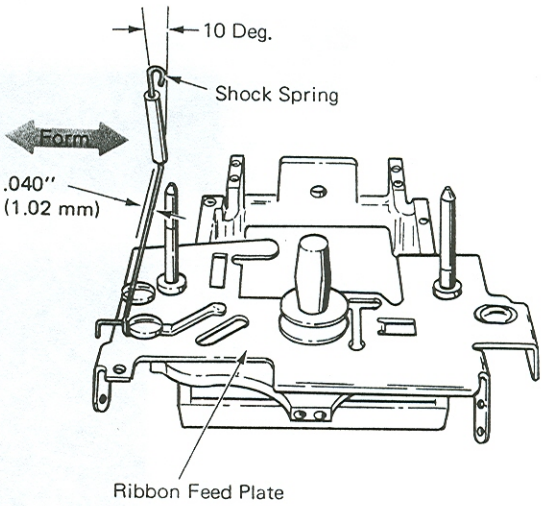

(Level 1 – Front View)

13. *Drag Lever (Level 1)* – Form the drag lever so that it contacts the outer part of the ribbon on the supply spool at the center, or slightly above. Do not form it front to rear.

NOTE: After forming the lever, make sure that it does not bind on its pivot screw. If the supply spool drag lever contacts the ribbon below center, the outer part of the ribbon spool will be moved up, which may cause the ribbon to come off of the spool.

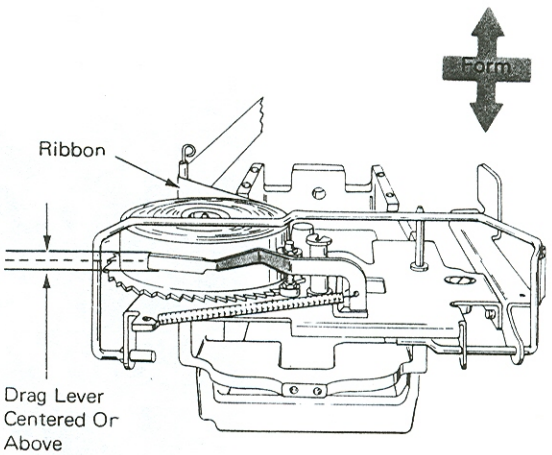

(Level 1 – Front View)

14. *Tracking Post (Level 1)* – Position the tracking post under its mounting screw so it clears the flanges of the clear take-up spool by .030" (0.76 mm). Form the tracking post at the bottom so the tracking post is vertical to the feed plate. If the tracking post is vertical, the ribbon will be centered as it passes between the two flanges of the clear take-up spool. It should also track on the center of the feed roller and evenly between the two flanges of the tracking post without touching either flange.

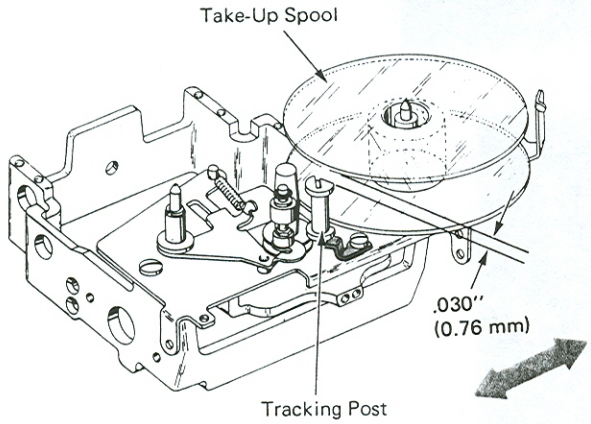

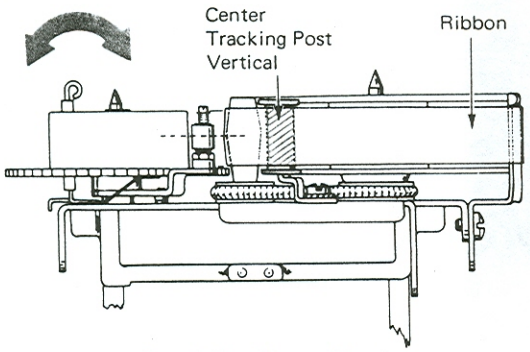

(Level 1 – Front View)

15. *Pressure Roller (Level 1)* – Adjust the pressure roller vertically on its mounting stud so it engages the center of the feed roller. The pressure roller mounting stud should be parallel to the previously aligned tracking post.

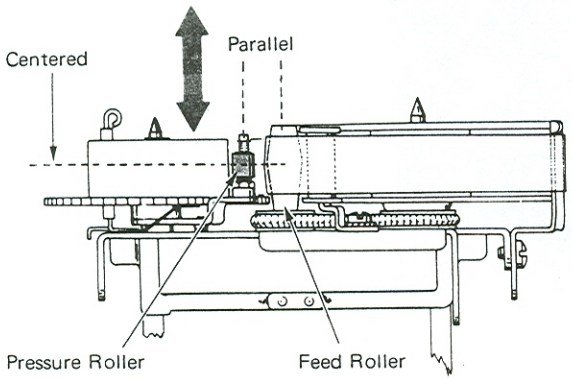

(Level 1 – Front View)

16. *Pressure Roller (Level 2 Only)* – Machines with the adjustable pressure roller should be adjusted so the lower end of the pivot screw clears the take-up drive pulley by .065" (1.65 mm).

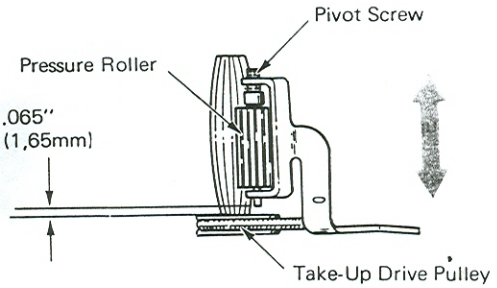

(Left Side View)

17. *Shock Spring (Level 2 Only)* – Form the shock spring to satisfy the following conditions:

a. When viewed from the front of the machine, the shock spring should be formed to make the roller on the shock spring 5 degrees to the right of vertical.

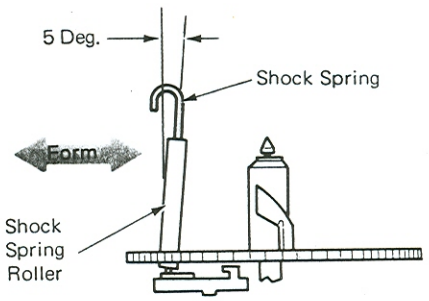

(Front View)

b. When viewed from the side, the shock spring should be formed so the roller is 10 degrees to the right of vertical.

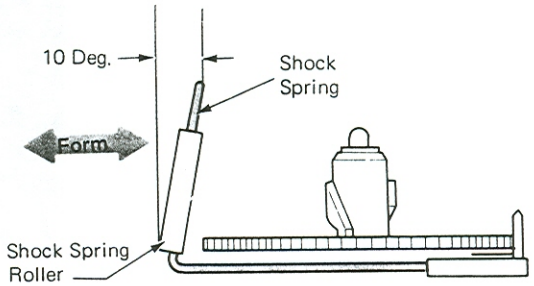

(Left Side View)

The fabric ribbon mechanism can be separated into two mechanisms. They are the ribbon lift mechanism and the ribbon feed mechanism. The ribbon lift raises the ribbon to the printing position before the typehead prints and then restores the ribbon to allow a visible writing line. The ribbon feed moves the ribbon laterally past the printing point to another part of the ribbon for the next typing operation. Included in the ribbon feed mechanism is the ribbon reversing mechanism, which changes the feeding direction when either end of the ribbon is reached.

The ribbon is a 9/16" (14.3 mm) ribbon in a throw away cartridge unit for clean handling. The cartridge unit contains two spools on which the ribbon is wound. The ribbon feeds from one spool to the other and back again. After the ink supply has been used up, the cartridge is thrown away, and a new cartridge installed (Figure 1).

Located to the right of the pointer on the carrier assembly is the ribbon load lever. When this lever is pushed to the right, it forces the ribbon lift guide into a high lift position to aid in changing the ribbon. A detent holds the load lever to keep the ribbon lift in the high lift position. The cartridge is then removed from the ribbon feed plate and the ribbon can be easily removed from the guide without touching the ribbon.

A new ribbon can be installed by reversing the above procedure. Angled lugs on the sides of the ribbon feed ratchets automatically guide the ribbon spools into the correct position. Guide lugs at each side of the feed plate maintain the lateral position of the cartridge. Retainer springs attached to the guide lugs hold the cartridge down to prevent vibration. After the ribbon is installed, the load lever is moved back to the left to allow the ribbon to restore to its normal position for a typing operation.

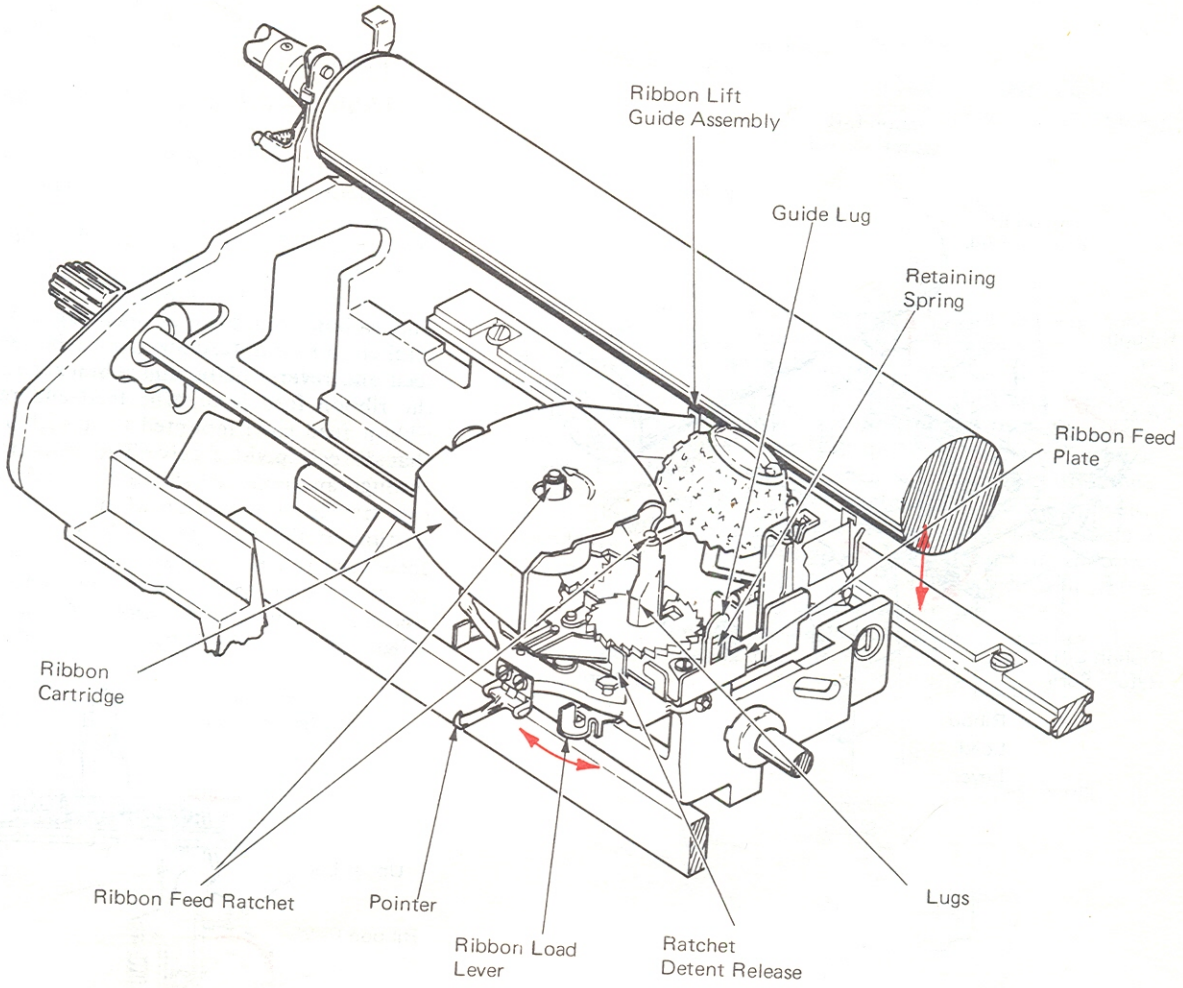

Figure 1 – Carrier Assembly (Fabric Ribbon Installed)

RIBBON LIFT

The ribbon lift mechanism consists of a lift cam, a ribbon lift cam follower, a control mechanism and the ribbon lift guide assembly (Figure 2). The lift mechanism is mounted to the carrier and moves with it. The ribbon lift cam is a single side cam that is attached by setscrews to the left side of the print sleeve. Each time a print cycle occurs, the cam makes one complete revolution.

The ribbon lift cam follower pivots on the carrier assembly above and to the rear of the cam. Each revolution of the cam raises the cam follower. The end of the ribbon lift control link fits into an elongated slot in the cam follower. The ribbon lift guide rests on the control link and pivots at the front of the carrier casting. As the cam follower is raised, the control link forces the ribbon lift guide assembly to pivot at the front and raise the rear of the assembly. A flat link from each side of the ribbon lift guide attaches to two pins at the front of the carrier to maintain the ribbon lift guide in a vertical position.

The ribbon lift guide assembly is spring loaded into the rest position to ensure that it will restore quickly and to prevent overthrow of the ribbon due to the speed of the lift mechanism (Figure 2).

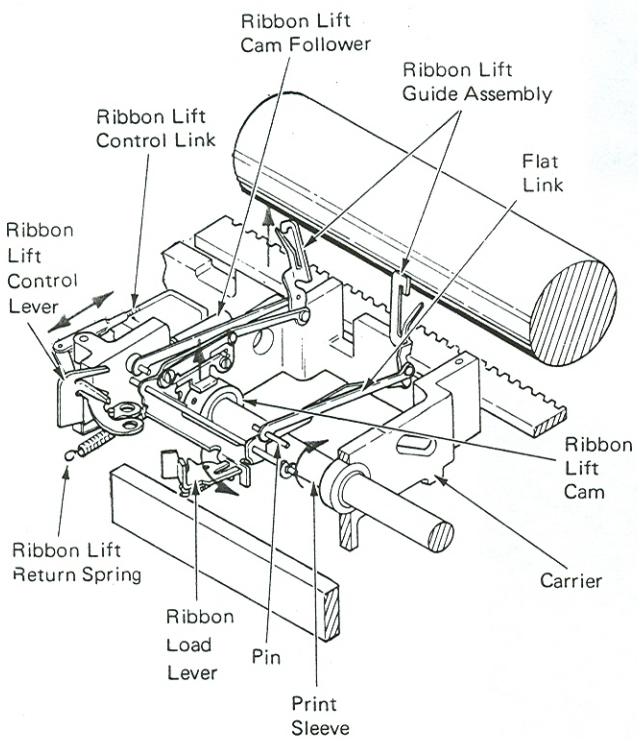

Figure 2 – Ribbon Lift Guide

The fabric ribbon mechanism has four lift positions. A lift position is selected by manually positioning the ribbon lift lever for stencil, low, medium or high lift position. The height to which the ribbon will be raised is determined by the position of the ribbon lift control link in the elongated slot of the cam follower. When the control link is to the rear of the slot, no motion is transferred to the lift guide assembly. When the control link is to the front of the slot, maximum motion is transferred to the lift guide assembly (Figure 3).

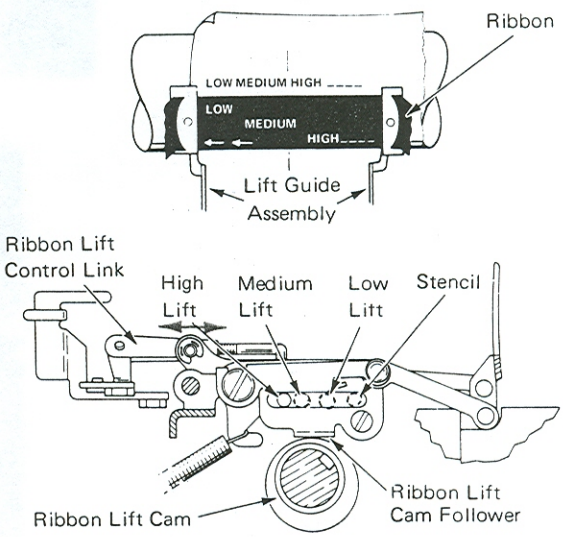

Figure 3 – Ribbon Lift Positions And Print Pattern (Right Side View)

RIBBON FEED OPERATION

The ribbon feed and reverse mechanism is mounted at the top of the carrier just in front of the typehead. The mechanism is removable as a unit for repair or replacement purposes.

The ribbon feed plate is made up of: two ribbon feed ratchets, a ribbon feed lever, a ratchet detent lever, a ribbon feed and reverse plate, and a bracket that is used to attach the ribbon feed lever. The feed and reverse plate has the ribbon feed pawl mounted to it with a shouldered stud so that it can pivot freely. The ribbon feed lever extends through an elongated slot in the feed and reverse plate so it can transfer the motion of the feed cam to front-to-rear motion of the feed pawl. The front-to-rear motion of the feed pawl is used to move a ribbon feed ratchet two teeth to the rear on each feed stroke. The ratchet to be fed is determined by the position of the ratchet detent lever (Figure 4).

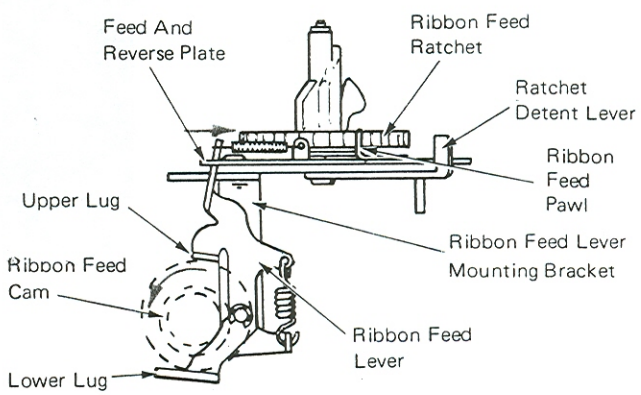

Figure 4 – Ribbon Feed Cam (Left Side View)

The ribbon feed ratchet assemblies rotate freely around their feed ratchet spindles. The ribbon supply hub on the feed ratchet extends through the ribbon cartridge and locks it to the hub so that the supply spool will turn with the ratchet. Two flat retainer springs are mounted on the ribbon feed plate at the rear so that they rest against the ribbon feed ratchets. The slight drag applied by the springs prevents unwanted turning of the supply spool (Figure 5).

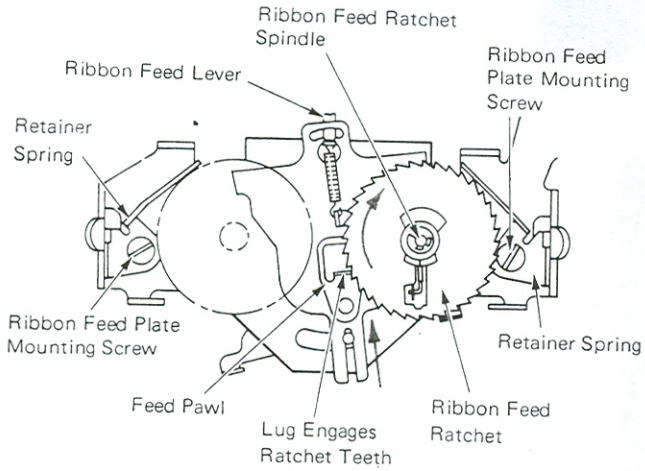

Figure 5 – Ribbon Feed Operation (Top View)

RIBBON REVERSE OPERATION

Each feed ratchet contains a small bellcrank called the ribbon reverse trigger (Figure 6). This trigger is spring loaded down by a small flat reverse trigger spring. The reverse trigger is held within the ribbon feed ratchet in the inactive position as long as ribbon is around the spool. During the last revolution of the supply spool, the reverse trigger is released into the active position. This causes the lower extension of the reverse trigger to drop into the path of a notch in the feed and reverse plate.

On the forward or restoring stroke of the plate, the reverse trigger contacts one side of the plate and prevents it from sliding forward. The other side continues to slide forward, causing a pivoting action on the plate about the point of contact. This makes the front of the plate pivot toward the opposite side, positioning the feed pawl in line with the ratchet teeth of the ribbon feed ratchet containing the empty ribbon spool. On the next feed stroke, the feed pawl will engage the ratchet teeth of the empty spool, causing it to feed ribbon (Figure 6).

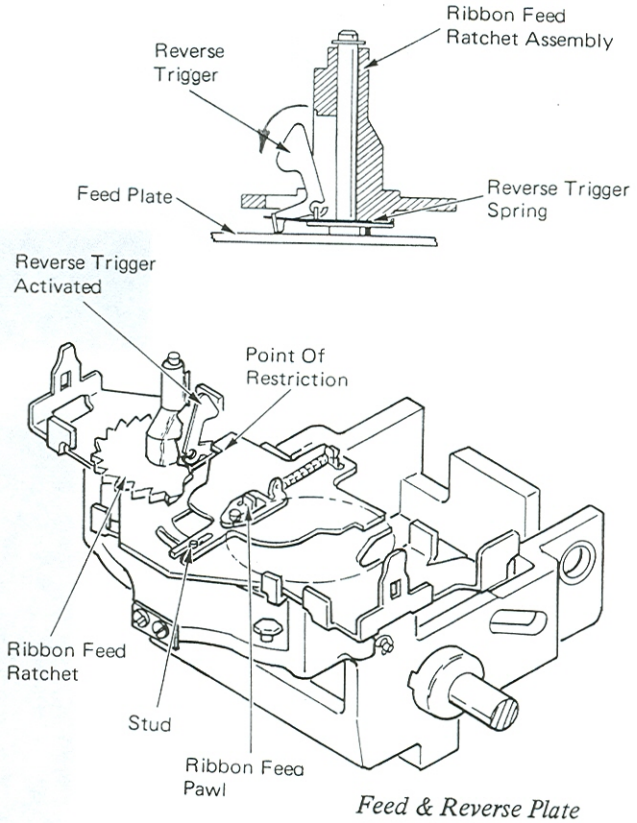

Figure 6 – Ribbon Reverse

Since the reversing action makes the full take-up spool become the supply spool and the empty supply spool become the take-up spool, it is necessary to disengage the ratchet detent lever from one feed ratchet and engage it with the other. This is done as part of the reversing operation. As the front of the feed and reverse plate moves, it causes the feed pawl to engage with the opposite feed ratchet, and pivots the ratchet detent lever to the opposite spool. A stud attached to the lever extends up through a slot in the feed and reversing plate connecting the two together. A hairpin spring, attached to this stud and to the feed plate, provides a toggling action to both the feed and reverse plate and the ratchet detent lever. In addition, the hairpin spring keeps the ratchet detent lever constantly spring loaded against the teeth of the feeding ratchet (Figure 7).

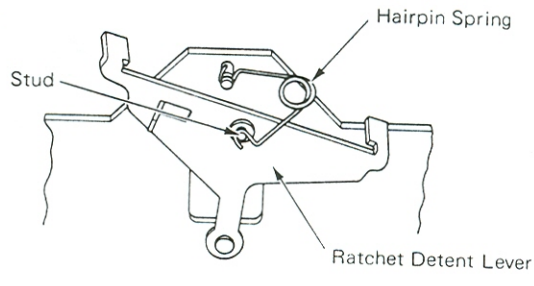

Figure 7 – Ratchet Detent (Bottom View)

STENCIL LOCKOUT

Ribbon feed is interrupted during the stencil mode of operation. This is done by centering the feed pawl between the ratchet spools so it can move freely front to rear without engaging a ratchet tooth. The feed pawl is moved to this position by the ribbon lift lever when it is in the no lift or stencil position (Figure 8).

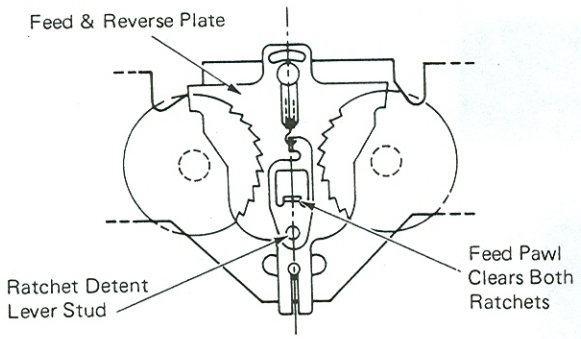

Figure 8 – Stencil Lockout (Top View)

Two lugs on the ribbon lift lever form a V which engages a lug on the ratchet detent lever. As the ribbon lift lever is placed in the stencil position, one of the lugs will contact the lug on the ratchet detent lever and push it to the center of the V. At this point, a detent will hold the ribbon lift lever in position and the ratchet detent lever will be centered. With the ratchet detent lever in this position, the feed pawl will be guided between the ratchet spools (Figure 9).

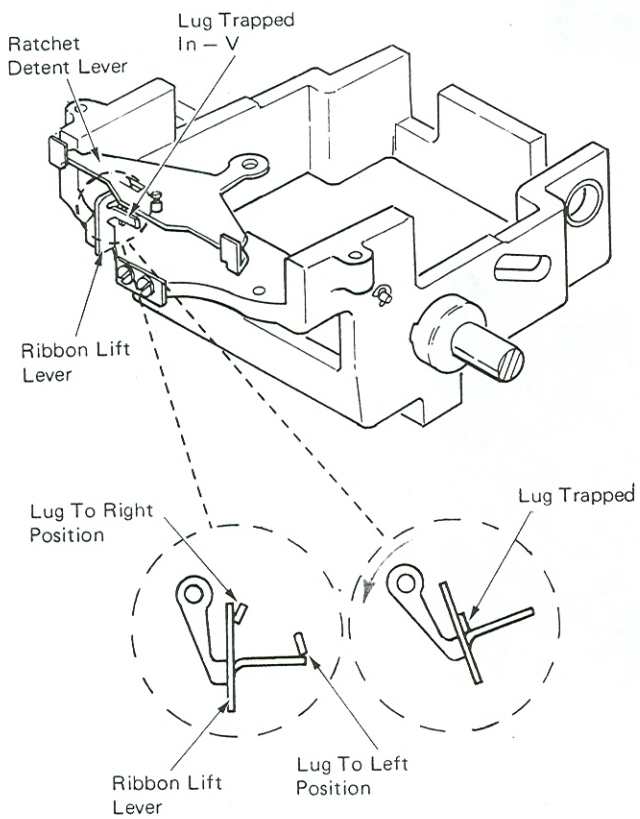

Figure 9 – Ratchet Detent Centered

Ribbon lift is also interrupted during the stencil mode of operation. When the ribbon lift lever is in the stencil position, the ribbon lift control link is allowed to move to the rear of the elongated slot in the lift cam follower (Figure 10). This places the end of the lift control link directly above the lift cam follower pivot point. As the lift cam rotates, the end of the lift control link simply rotates around the cam follower pivot point and no motion is transferred to the lift guide assembly. This prevents the ribbon from lifting into the path of the typehead during a stencil operation.

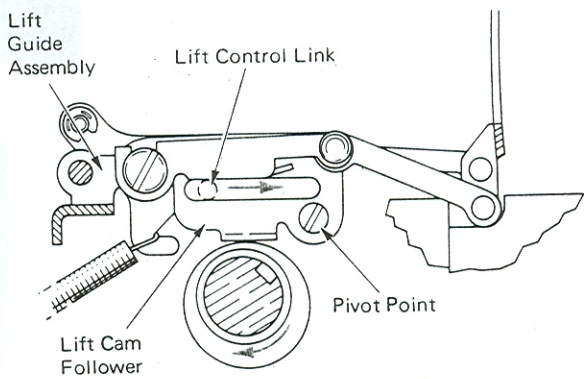

Figure 10 – Ribbon Lift Guide (Stencil Position) (Right Side View)

LEVEL 1 FEED

The old level ribbon mechanism contains a few more parts than the current mechanism, however, the operation is similar. The position of the feed pawl determines which ratchet is fed as the pawl moves to the rear. The feed pawl pivots on a pin below the ribbon feed plate and extends up through a hole in the plate. The pawl mounting allows left-to-right as well as front-to-rear movement. A restoring spring, attached to the pawl, restores the pawl to the rest position each time it operates. The spring also holds the pawl left or right into engagement with the correct ribbon feed ratchet depending upon the direction of the pull of the spring. The forward end of the spring is attached to a lever called the ribbon feed detent lever. The detent lever pivots on the ribbon feed plate. When the lever is moved to the right, the feed pawl is pivoted into engagement with the right feed ratchet. When the detent lever is moved to the left, the feed pawl engages to feed the left ratchet (Figure 11).

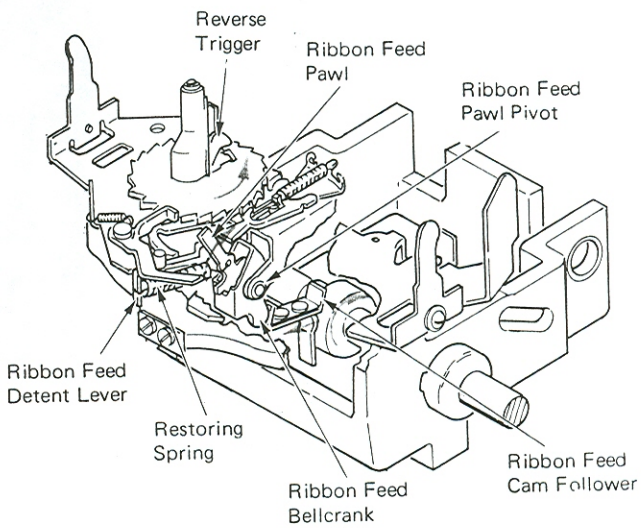

Figure 11 – Ribbon Feed Mechanism

The ribbon feed pawl is powered to the rear by the action of the ribbon feed cam. A sliding cam follower transfers the motion of the cam to the ribbon feed bellcrank which pivots and pushes the feed pawl to the rear. Enough motion is available from the cam to cause two teeth to feed on the ratchet.

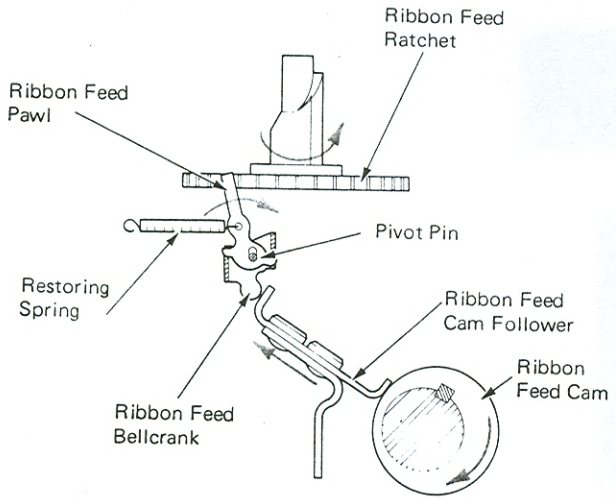

Figure 12 – Ribbon Feed Cam Motion (Right Side View)

As the feed pawl restores to the front, it slides across the teeth of the ratchet into the rest position (Figure 13). The drag of the pawl across the teeth can rotate the ratchet counterclockwise and unwind ribbon. To prevent any backward rotation, a detent pawl is spring loaded into the teeth of the ratchet to allow feed in one direction only.

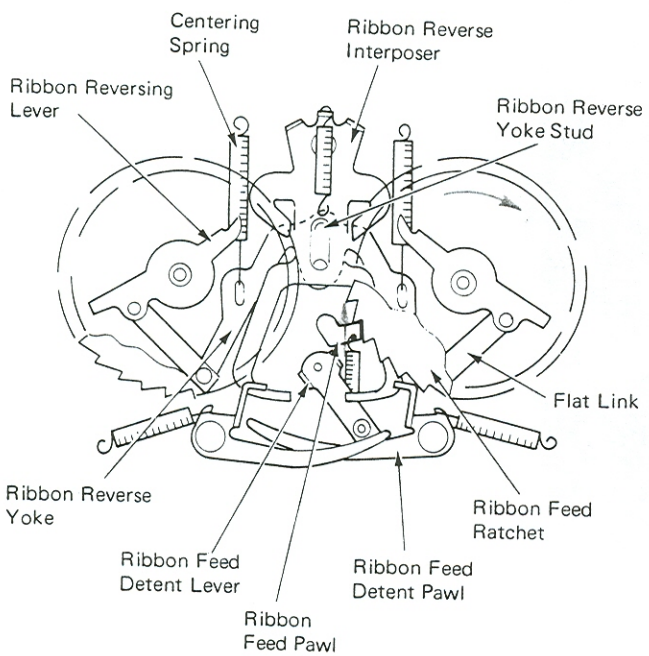

Figure 13 – Ribbon Feed Pawl (Rest Position – Top View)

LEVEL 1 REVERSE

To reverse the ribbon, a part of the reverse trigger pivots down through a hole in the ratchet into position below the ratchet as it does in the current mechanism (Figure 14). The empty spool rotates slightly further, causing the reverse trigger to contact and move the reverse lever, which pivots just below the ratchet. The reverse lever is connected by means of a flat link, to an arm of the reverse yoke below the ribbon feed plate. The yoke is pivoted by operation of the reverse lever. A stud on the yoke at the rear of the pivot points extends up through the feed plate into a slot in the reverse interposer. Movement of the yoke positions the front of the reverse interposer left or right, according to which ribbon spool is being emptied.

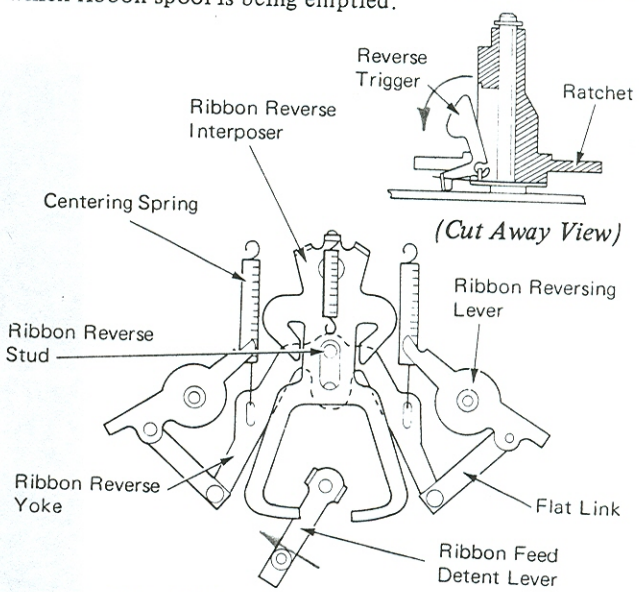

Figure 14 – Ribbon Reverse Mechanism (Top View)

Two things occur when the reverse interposer is positioned. A hook at the front of the interposer hooks around a lug on the ribbon feed detent lever (Figure 15). The interposer lever, mounted on the interposer, is positioned into the path of the ribbon feed pawl. The next operation of the ribbon feed cam causes the feed pawl to drive the reverse interposer to the rear. The hook at the front of the interposer pulls the lug of the detent lever to the rear, causing the detent lever to pivot to the opposite position.

As the feed pawl restores, its spring pivots it over into engagement with the opposite ratchet.

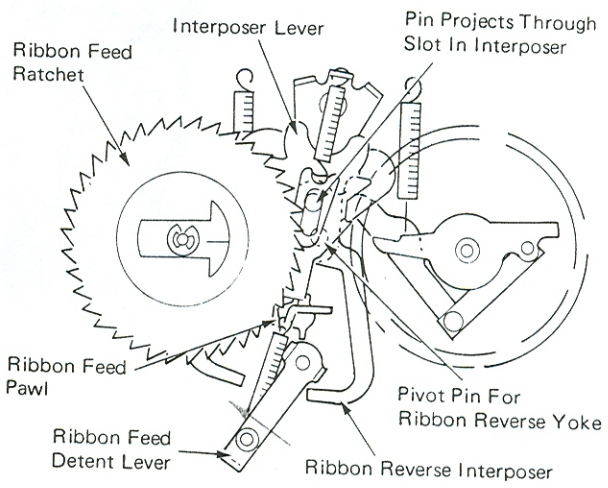

Figure 15 – Ribbon Reverse Mechanism (Active Position – Top View)

FABRIC RIBBON ADJUSTMENTS

1. *Ribbon Lift Cam* – Adjust the ribbon lift cam so the aligning slot on the print sleeve lines up with the front edge of the print sleeve keyway.

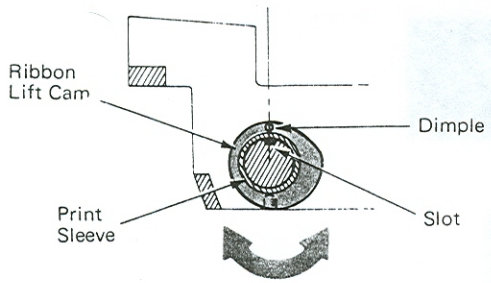

(Right Side View)

2. *Centering Spring (Level 1 Only)* – With the ribbon reverse interposer centered, form the lugs of the ribbon feed plate for .003"-.005" (0.08-0.13 mm) clearance in the centering spring loops. This adjustment ensures that the springs are not extended when at rest and that they will properly restore the mechanism after a reverse operation.

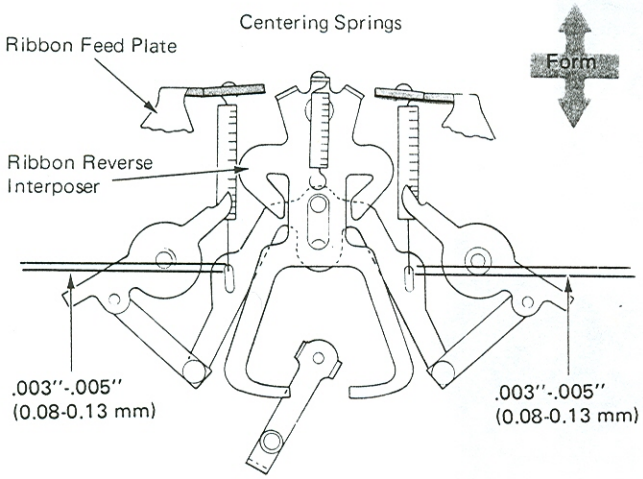

(Top View)

3. *Ribbon Feed Plate (Level 1 Only)* – With the ribbon mechanism set for a reversing operation and the ribbon cam at its high point, adjust the feed plate forward or back on the carrier so the ribbon feed pawl holds the reverse interposer within .005"-.010" (0.13-0.25 mm) of its total motion. This adjustment not only ensures enough throw for a reversing operation, but also gives maximum ribbon feed results by determining the rest and active positions for the pawl.

CAUTION: After completing the adjustment, manually cycle a character to see that two teeth are fed plus .005"-.010" (0.13-0.25 mm) overthrow. Be sure that the feed pawl does not contact the interposer lever as the pawl is manually reversed from side to side.

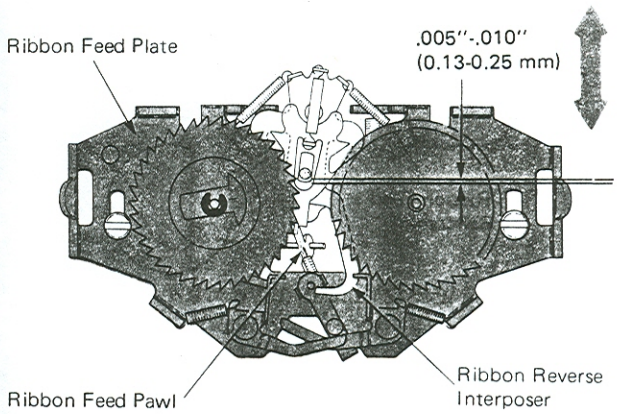

(Top View)

4. *Cartridge Guide Lugs* – Form the cartridge guide lugs so the cartridge spools will be centered over the ratchets. Side play of the cartridge must be limited within .005"-.010" (0.13-0.25 mm).

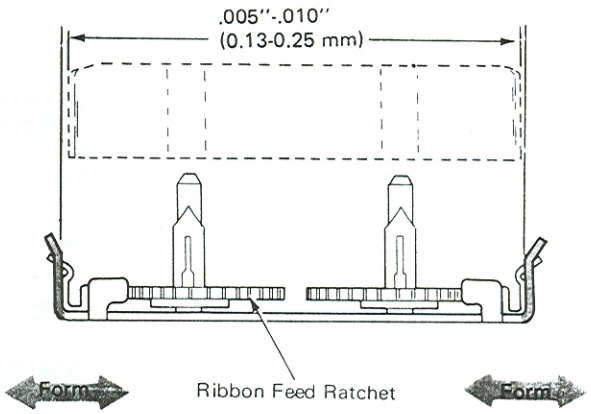

(Front View)

5. *Cartridge Retaining Springs (Level 2 Only)* – The cartridge retaining springs should be positioned laterally so they are FLUSH against the feed plate; then adjust front-to-rear so the cartridge retaining fingers are centered in the holes of the cartridge guide lugs. The ratchet brake part of the spring should put a small drag on the feed ratchet. Form only as necessary.

NOTE: Excessive or not enough tension could result in reverse failure.

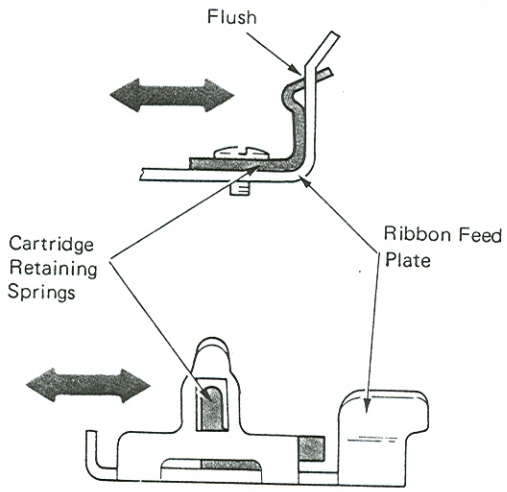

(Right Side View)

6. *Ribbon Lift Lever (Level 2 Only)* – Three conditions must be met as follows:

a. Form the ribbon lift lever finger tab left or right so the ribbon feed pawl will center between the two feed ratchets when the lift lever is placed in stencil position.

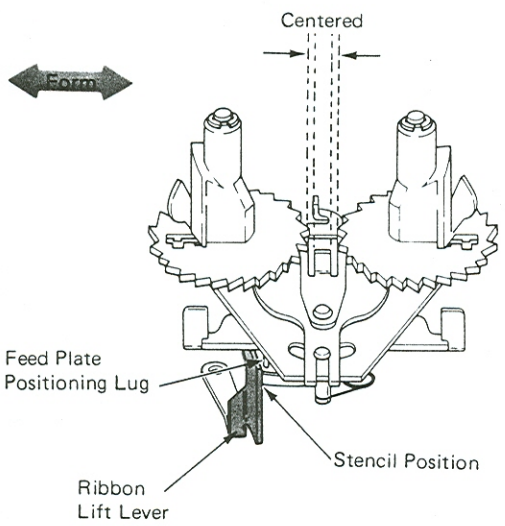

b. Form the rear lug so a clearance of .010"-.040" (0.25-1.02 mm) exists between the lug and the feed plate positioning lug when the LEFT RATCHET IS FEEDING.

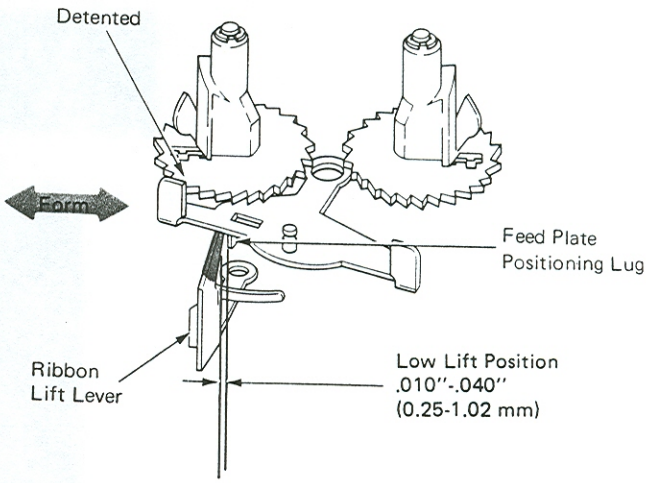

c. Form the front lug so a clearance of .010"-.040" (0.25-1.02 mm) exists between the lug and the feed plate positioning lug when the RIGHT RATCHET IS FEEDING.

NOTE: Do not form the ribbon feed plate positioning lug, since breakage would require replacement of the whole feed plate.

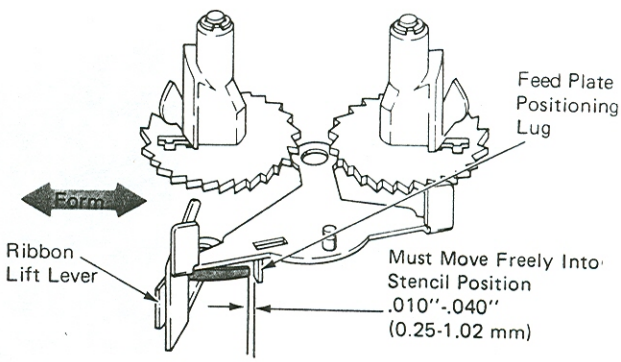

7. *Ratchet Detent Lever Lugs* – These should be formed as follows:

   a. Left or right so the ribbon feed ratchet tooth overthrows the edge of the detent lug by .025"-.050" (0.64-1.27 mm) when hand cycling to the high point of the ribbon feed cam.

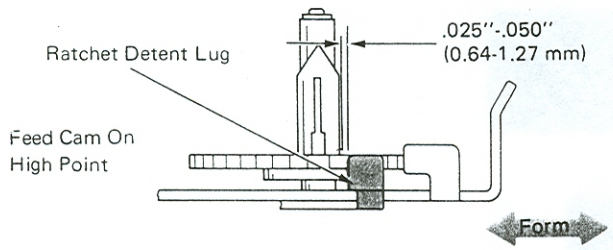

   b. Form the detent lugs front-to-rear so the ribbon feed pawl engages a ratchet tooth by approximately one-half of the ratchet tooth.

   NOTE: The feed pawl spring lug should clear the teeth of the opposite ratchet by at least .015" (0.38 mm) when the feed pawl is being moved to the rest position at the end of an operation. Failure to clear the teeth of the opposite ratchet under power may result in a locked mechanism and failure of the ribbon feed operation.

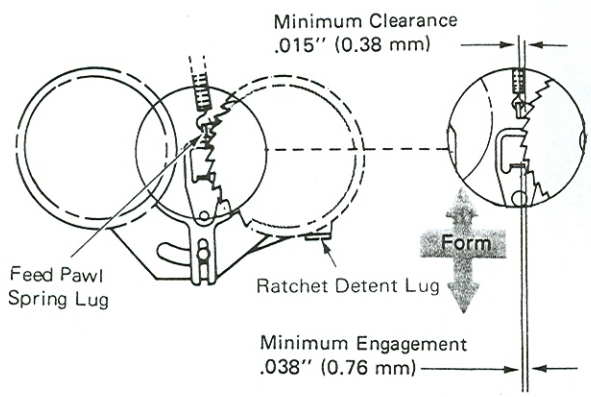

8. *Ribbon Lift Guide Plate* – Adjust the plate as low as possible without causing a change in the ribbon lift guide height as the ribbon lift lever is moved from the low lift to the high lift position. The ribbon lift cam should be at the low point when the check is made.

   This adjustment ensures the same amount of throw for both the high and low lift position.

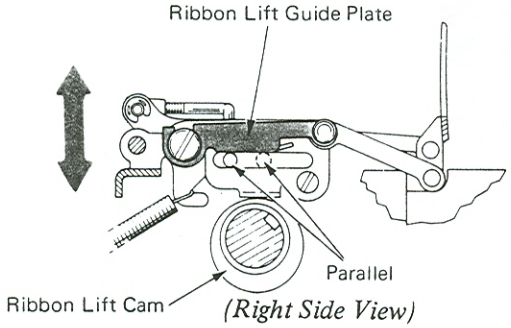

(Right Side View)

9. *Ribbon Lift Control Link* – Adjust the link forward or back by means of its clevis so the underscore will strike the ribbon .016"-.045" (0.41-1.14 mm) from the bottom edge. The ribbon lift lever must be in the high lift position when this check is made.

   CAUTION: Do not adjust the link so short that it binds off the front end of the cam follower slot as the ribbon lift lever is moved into the high lift position.

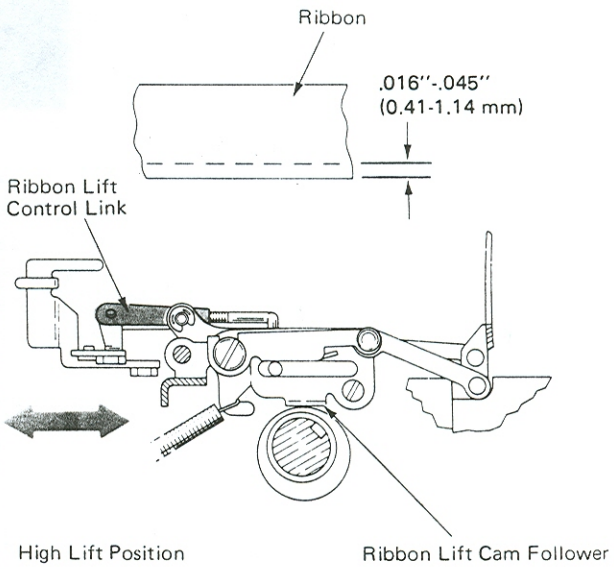

(Right Side View)

10. *Stencil Lockout (Level 1 Only)* – With the lift lever in the stencil position and the cam follower on the high point of the ribbon feed cam, form the ribbon feed latch for .010" (0.25 mm) clearance with the lug on the cam follower.

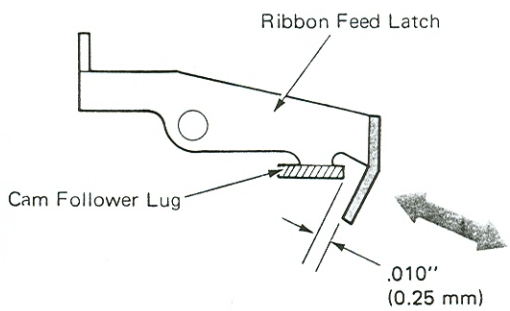

SELECTIVE RIBBON OPERATIONAL THEORY

The purpose of the selective ribbon system is to operate with the film ribbon, the IBM Tech III ribbon or the IBM High Yield Correctable Film Ribbon. All three of these ribbons are contained in a cartridge, similar to the "Selectric" Typewriter fabric ribbon cartridge, but much larger. The complete supply of ribbon is in the left side of the cartridge. The used ribbon will be wound around the take-up core on the right side and the cartridge will be thrown away when the ribbon is used up. The cartridges for the three types of ribbons look the same but have different color take-up knobs and leaders for identification. Blue is used for IBM Tech III, pink for film and orange for the IBM Correctable Film Ribbon (Figure 1).

The feed modes for the IBM High Yield Correctable Film Ribbon and film ribbon are the same, but the feed mode for the IBM Tech III ribbon differs completely. The film ribbons must be fed so that no characters overlap, but the IBM Tech III ribbon is fed in much smaller amounts so as to use the overstrike feature of this ribbon. The inner construction of the cartridge determines in which ribbon feed mode the mechanism will operate.

A ribbon lift pattern of three tracks is used for all three of the ribbons. However, the IBM Tech III ribbon lift is changed slightly to maintain even color.

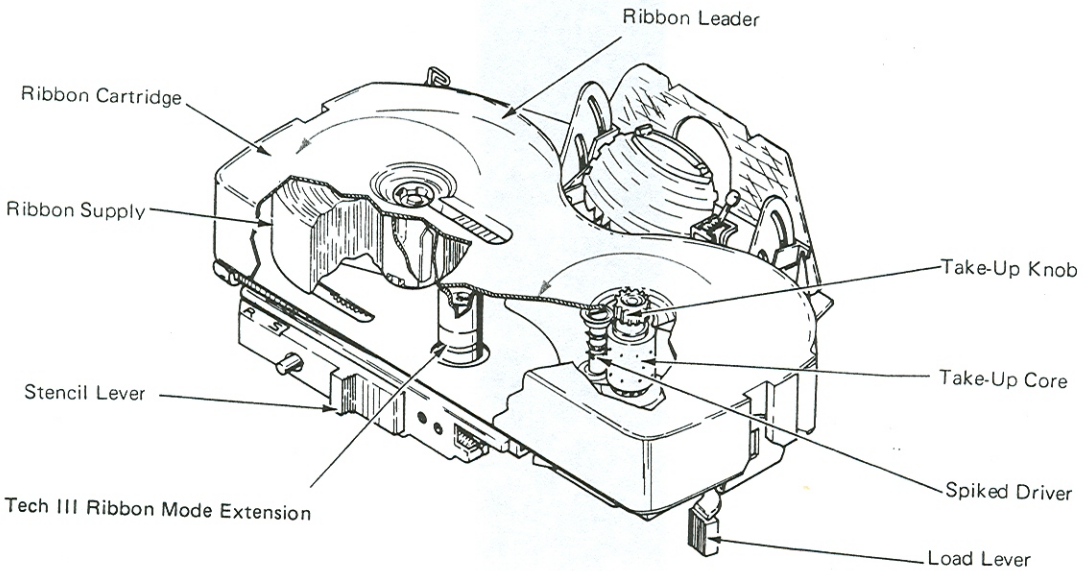

(View With Cartridge Installed)

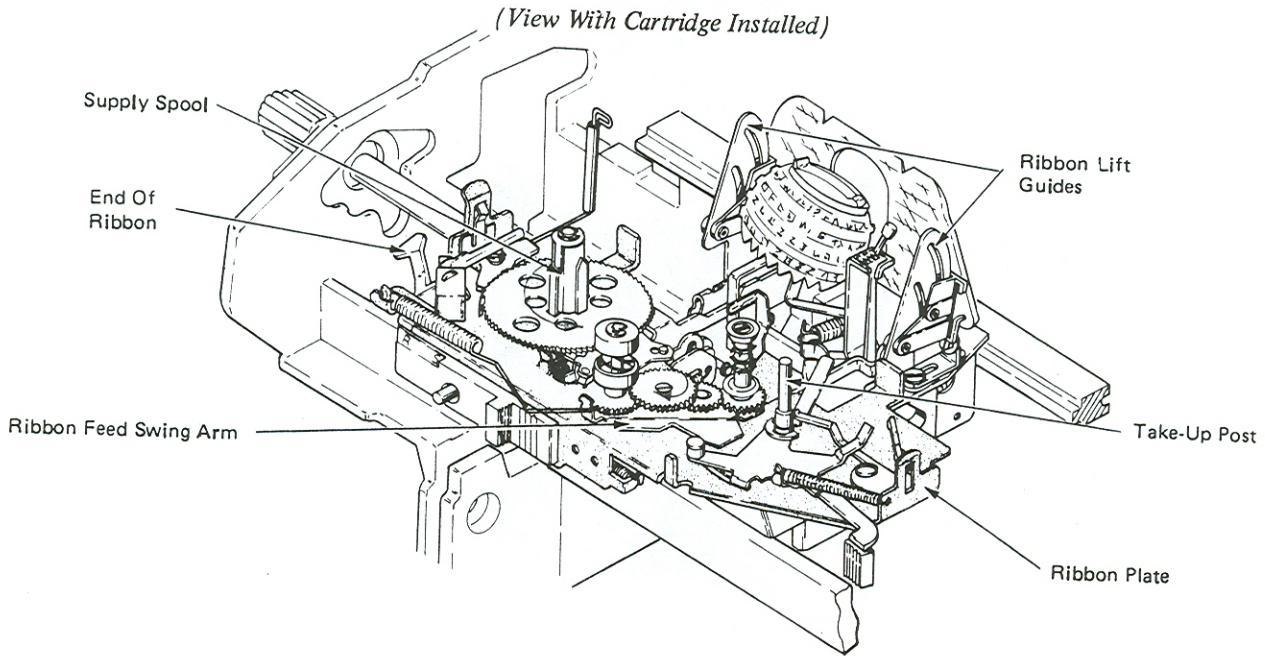

(Viewed With Cartridge Removed)

Figure 1 – Selective Ribbon System

RIBBON FEED

Ribbon feed is performed by the ribbon feed cam follower assembly operating a ribbon feed pawl. During a print cycle, the ribbon feed pawl operates in one of the eighteen feed windows on the ribbon feed and lift wheel, rotating it in a counterclockwise direction. At rest, the ribbon feed cam follower is on the high point of the ribbon feed cam and the ribbon feed pawl is engaged in one of the feed windows (Figure 2).

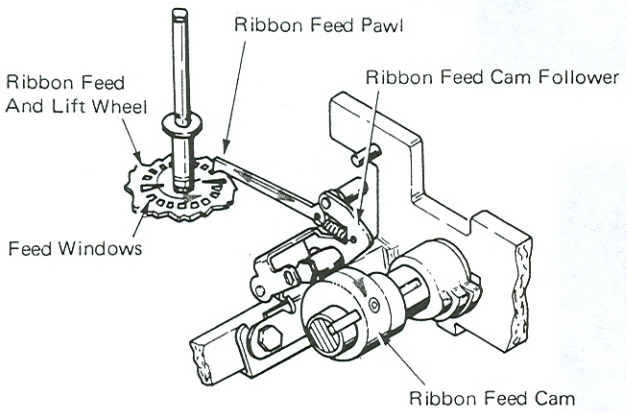

Figure 2 – Ribbon Feed At Rest (Right Rear View)

The ribbon feed cam follower is spring loaded against the ribbon feed cam. At the beginning of a print cycle, the cam follower moves toward the low point of the cam. The feed pawl moves toward the rear of the machine, causing it to move out of the window of the ribbon feed and lift wheel. As the cam follower moves to the low point of the cam, the pawl drops in the next window to the rear. The ribbon feed and lift wheel is held in position by a detent, preventing clockwise movement by the ribbon lift control lever (Figure 3).

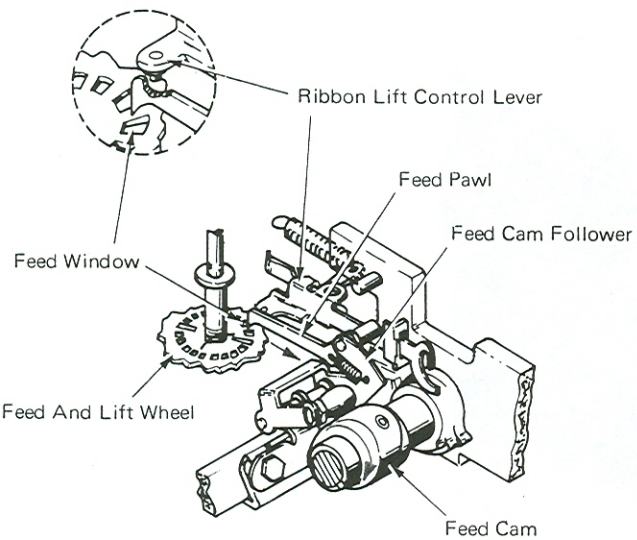

Figure 3 – Ribbon Feed, Early Stages Of Print Cycle (Right Rear View)

As the print cycle completes, the cam follower rises toward the high point of the cam, moving the pawl toward the front of the machine. The pawl operates against the front surface of the window, rotating the ribbon feed and lift wheel in a clockwise direction (Figure 4).

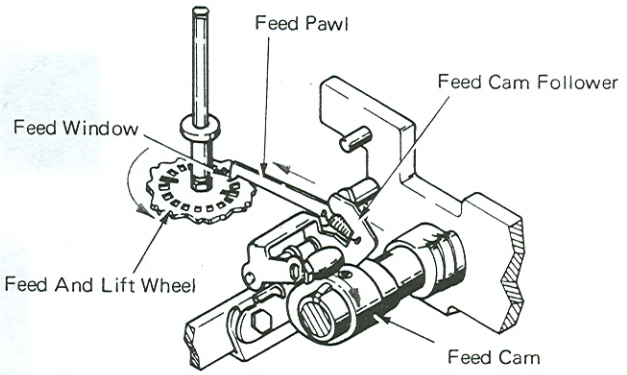

Figure 4 – Ribbon Feed, Print Cycle Near Completion (Right Rear View)

At the completion of the print cycle, the feed cam follower is again on the high point of the cam and the ribbon feed and lift wheel has been rotated 1/18 of a turn to its next detent position.

The ribbon feed and lift wheel is connected to the ribbon feed post with a hexheaded screw. The feed post is free to rotate within the ribbon feed swing arm. The ribbon feed swing arm pivots within a bearing in the ribbon plate (Figure 5).

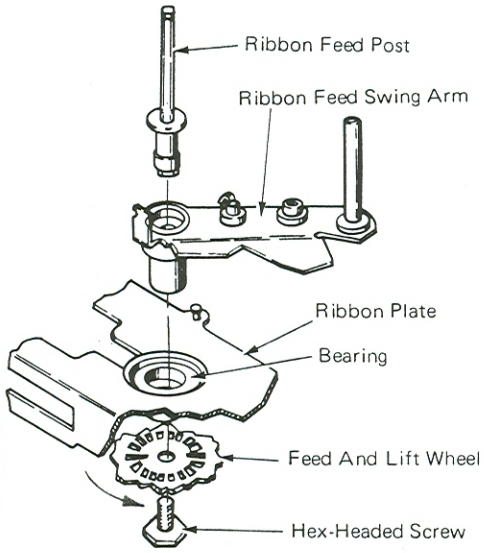

Figure 5 – Ribbon Feed Post And Swing Arm Mounting

The rotation of the ribbon feed and lift wheel rotates the ribbon feed post. The ribbon feed gear, mounted on flat surfaces of the feed post, also rotates (Figure 6).

The driver is mounted on a post at the free end of the swing arm. Two intermediate gears mounted on the swing arm transfer the feed gear rotation to the driver.

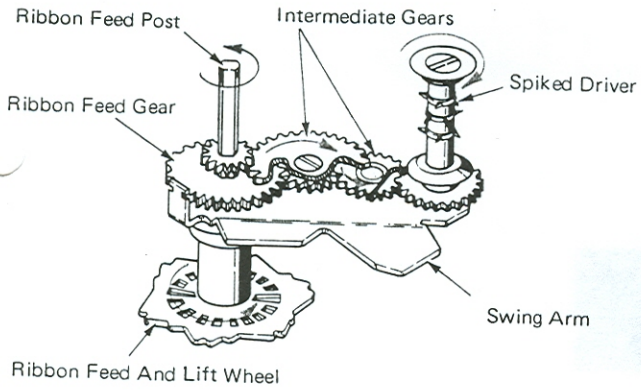

Figure 6 – Spiked Driver Rotation

The free end of the swing arm is heavily spring loaded toward the ribbon takeup post. This causes the points of the driver to engage the used ribbon. When the driver rotates, it causes the takeup core to rotate about the takeup post, winding up the used ribbon and pulling new ribbon into the print position (Figure 7).

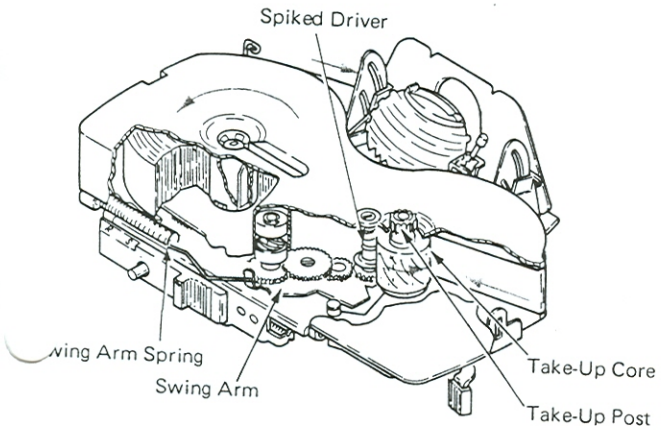

Figure 7 – Ribbon Feed Operation

FILM RIBBON MODE

The different feed amounts for the two ribbon modes are controlled by the amount of driver rotation for each print cycle.

The ribbon feed gear is free to slide vertically on the ribbon feed post. Its vertical position determines the amount of driver rotation. In the film ribbon mode, the ribbon feed gear is spring loaded up by the feed gear spring allowing its large gear to engage the small gear of the first intermediate gear. This causes the spiked driver to rotate enough to feed film ribbon so the characters do not overlap (Figure 8).

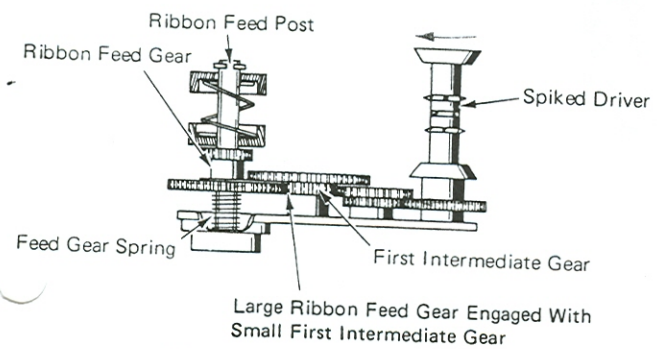

Figure 8 – Film Ribbon Mode

IBM TECH III RIBBON MODE

In the IBM Tech III ribbon mode, an extension within the cartridge depresses the ribbon mode button which, through a compression spring, depresses and holds down the ribbon feed gear. This allows the small gear on the ribbon feed gear to engage the large gear of the first intermediate gear and causes the driver to rotate approximately 1/6 the amount as in the film ribbon mode (Figure 9).

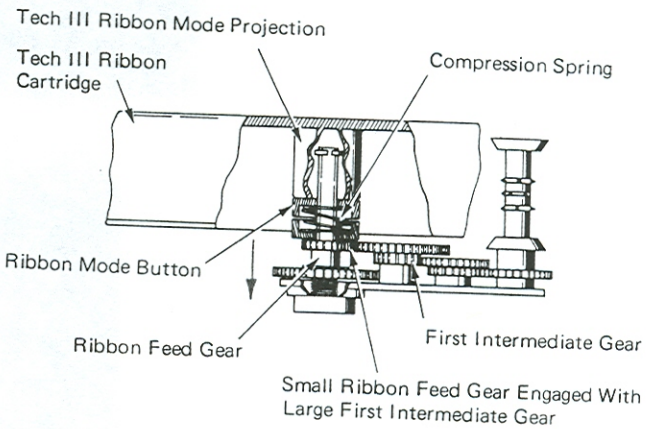

Figure 9 – IBM Tech III Ribbon Mode

The ribbon must be kept slightly tight through the ribbon path for proper feeding and tracking. This is done by the ribbon shock wire which is used as a detent on the ribbon supply spool. The ribbon supply spool is not allowed to rotate until the ribbon applies enough tension on the shock wire to release the detent. As more ribbon is supplied, some tension is released from the shock wire allowing the detent to bottom in the teeth of the supply spool (Figure 10).

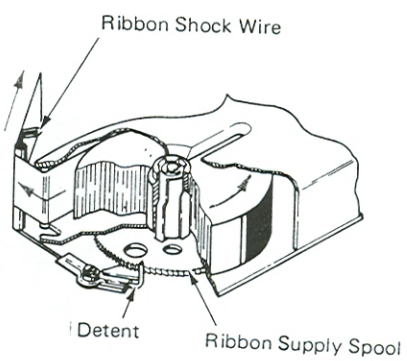

Figure 10 – Ribbon Tension Spring

RIBBON LIFT

All three of the ribbons used with this mechanism are slightly less than 11/16" (17.5 mm) wide. In order to get the maximum number of characters from the ribbon, the mechanism will use three different ribbon lift positions. The ribbon lift mechanism includes a lift cam, lift cam follower assembly, lift control lever, lift arm and lift guide assemblies (Figure 11).

The lift cam follower pivots above and to the rear of the lift cam. A lift spread adjusting plate is mounted to the cam follower by two small screws. A lug on the adjusting plate contacts the head of the height adjusting screw in the lift arm. As the cam follower is pivoted by the lift cam, it supplies vertical motion to the lift arm.

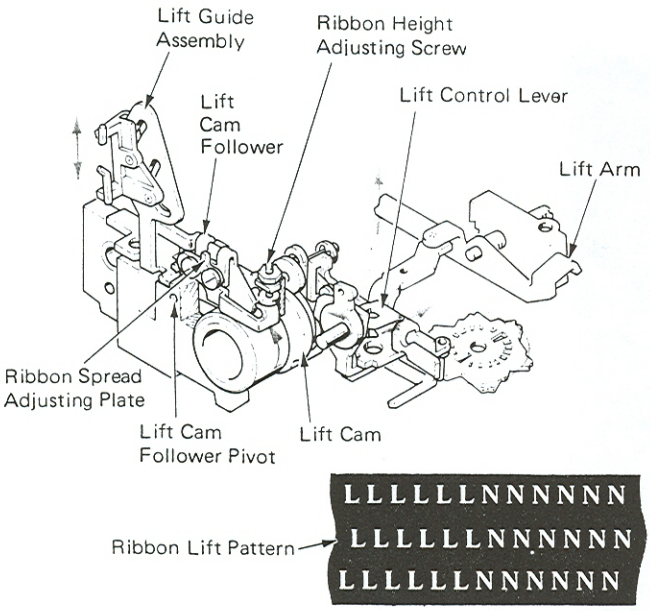

Figure 11 – Ribbon Lift Assembly

The ribbon is passed through the ribbon lift guides, which can move vertically in curved slots in the lift guide brackets. The lift guides are connected to the lift arms by the lift guide links which are part of the lift guide assemblies. The lift arms are loaded together by the lift guide bias springs to prevent ribbon lift (Figure 12).

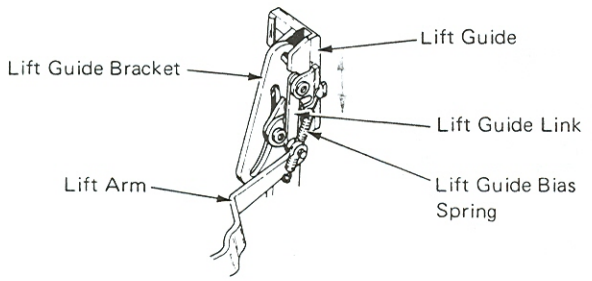

Figure 12 – Ribbon Lift Guide Assembly

The three ribbon lift positions are determined by the lift cam, which has three different height surfaces. The lift cam follower receives a different amount of motion from each surface (Figure 13).

The ribbon lift cam follower roller is free to slide on its shaft. Its side position is controlled by a yoke on the ribbon lift control lever. A stud on the forward end of the ribbon lift control lever is spring loaded against the cam surface of the ribbon feed and lift wheel.

The ribbon feed and lift wheel cam surface has three different heights. As the forward end of the ribbon lift control lever follows the feed and lift wheel cam surface, the yoke on the rear end of the ribbon lift control lever positions the ribbon lift cam follower roller over one of the three SIDES of the ribbon lift cam. This changes the ribbon lift from high lift to medium lift to low lift and back to high lift again to repeat the cycle.

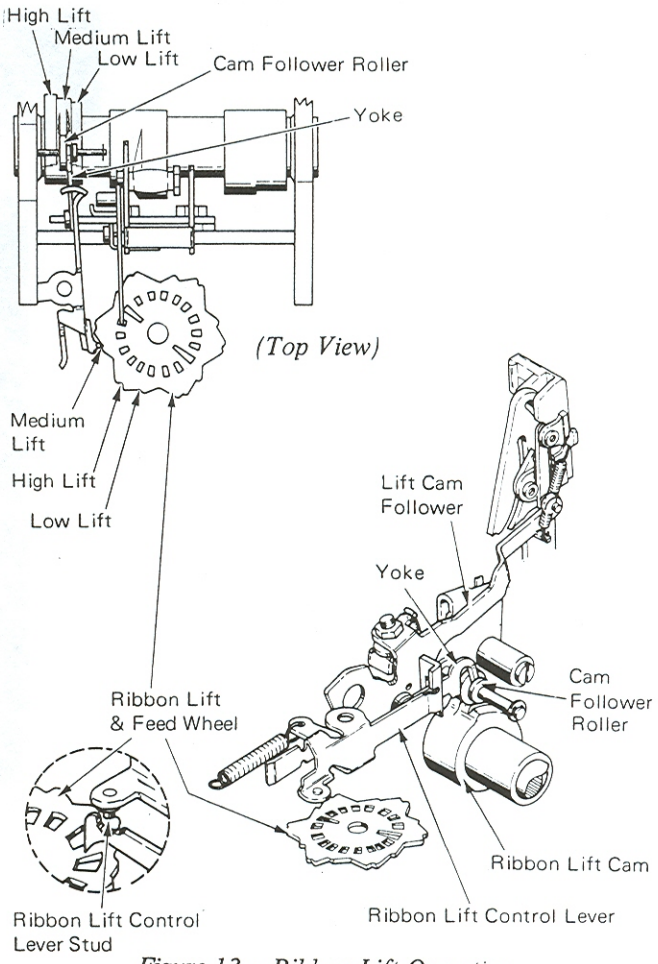

Figure 13 – Ribbon Lift Operation

In the IBM Tech III ribbon mode, the ribbon lift pattern is changed (wobbled)slightly to ensure even print color. This is done by the wobbler cam, the wobbler bellcrank and the wobbler eccentric. The left pivot point of the ribbon lift arm assembly is the wobbler eccentric. The wobbler eccentric has a vertical lug that extends above the surface of the ribbon plate. Moving this lug front to rear causes the wobbler eccentric to rotate, moving the left lift arm pivot point up or down (Figure 14).

The wobbler bellcrank pivots on a stud on the ribbon plate just to the left rear of the ribbon feed gear. The tip of the left wobbler bellcrank arm rests in an opening in the vertical lug of the wobbler eccentric. The ribbon lift arm spring loads both the wobbler eccentric lug and the wobbler bellcrank arm toward the front. If the mechanism is in the IBM Tech III ribbon mode, the wobbler bellcrank arm moves front to rear, moving the wobbler eccentric lug front to rear.

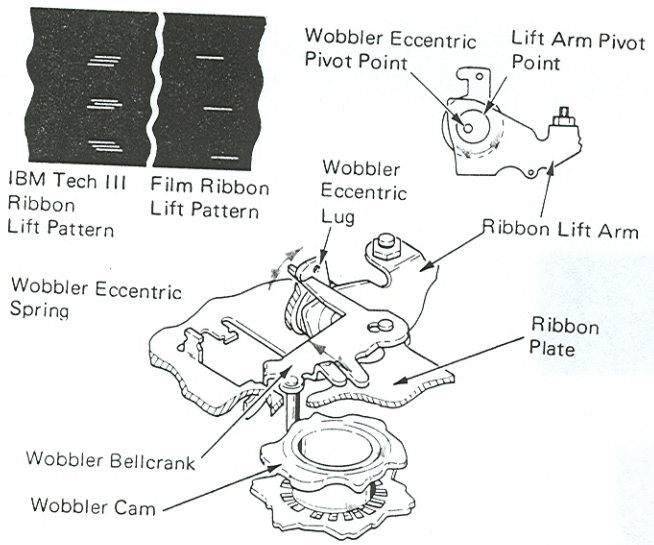

Figure 14 – Ribbon Lift Wobble Mechanism

The wobbler mechanism is active only in the IBM Tech III ribbon mode. The front of the wobbler bellcrank is free to move vertically. Its vertical position is controlled by two lugs on the wobbler bellcrank contacting the ribbon feed gear. When the feed gear is pressed down into the IBM Tech III ribbon mode by the cartridge, it also moves the wobbler bellcrank down into the operated position. When the wobbler bellcrank is in the operated position, a stud on the forward end of it follows the wobbler cam which is mounted directly above and turns with the ribbon feed and lift wheel. The motion from the wobbler cam rotates the wobbler bellcrank, which operates the wobbler eccentric, causing the desired changes in the ribbon lift pattern (Figure 15).

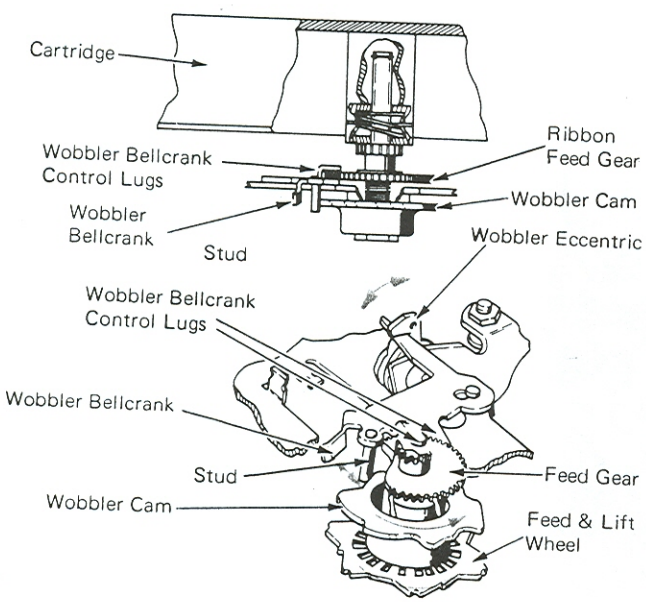

Figure 15 – IBM Tech III Mode – Wobbler Active

When the mechanism is in the film ribbon mode, the feed gear is up. This allows a lug on the wobbler bellcrank to be ...hed against the ribbon plate, causing the bellcrank to be ...tive (Figure 16).

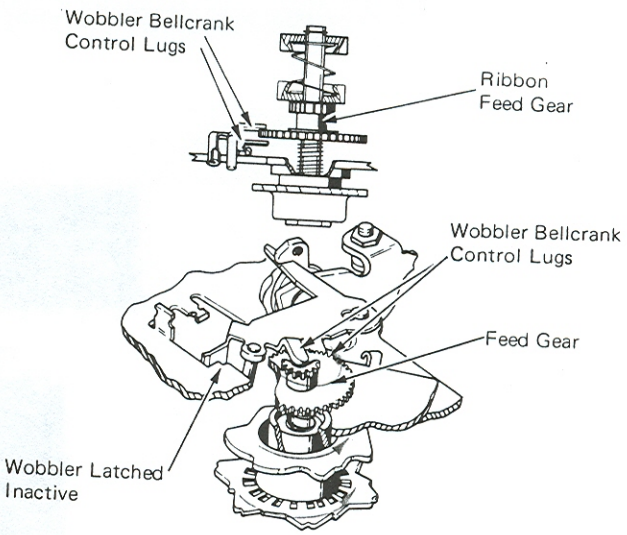

Figure 16 – Film Ribbon Mode – Wobbler Inactive

STENCIL MODE

When the typewriter is used for typing stencils, the ribbon feed and lift operations must be locked out. This is done by moving the stencil lever left to the stencil position. The lever will latch in the stencil position and can be released by pushing the release button. A lug on the stencil lever contacts an extension on the front of the lift control lever, moving the rear of the lift control lever to the right. This moves the lift cam follower roller completely off the lift cam, inhibiting ribbon lift (Figure 17).

When the lift control lever is in the stencil position, a feed lockout lug on it moves behind the feed pawl mounting stud. This prevents rear movement of the feed pawl, inhibiting ribbon feed.

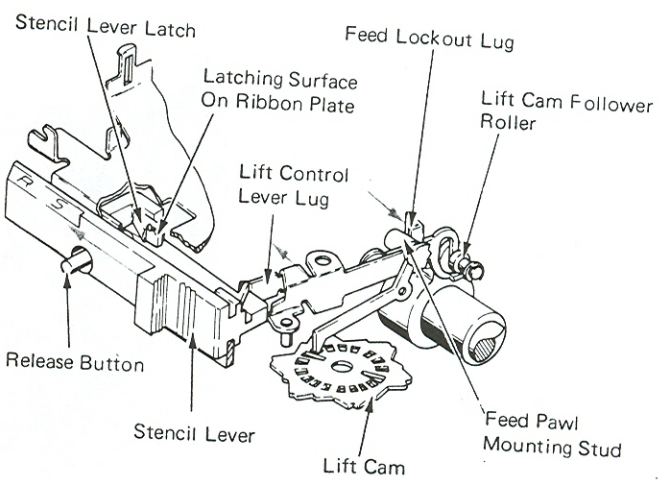

Figure 17 – Stencil Operation

RIBBON LOAD

When the ribbon needs to be changed, the load lever is moved to the left to the load position. An angled surface on the load lever contacts a lug on the right front of the lift arm assembly. This moves the front of the lift arm down and raises the lift guides for easier ribbon installation (Figure 18).

During the loading of a ribbon, the operator must be prevented from turning the takeup core in the wrong direction. the takeup core interlock extends to the left from the right cartridge retaining spring. In the load position, the takeup core interlock engages the teeth on the takeup core, preventing it from being rotated in a clockwise direction. In the normal operating position, the takeup core interlock is held away from the takeup core by a lug on the load lever.

The load lever latch will not allow the load lever to restore to the operate position until a cartridge is installed. This depresses the latch and allows the load lever to be restored to the operate position.

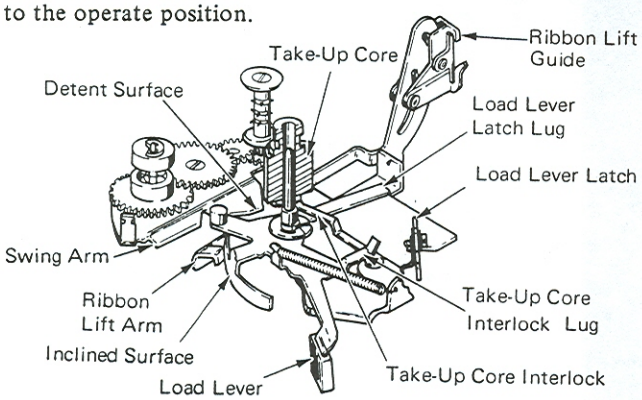

Figure 18 – Load Lever Operation

As the swing arm moves to the load position, it contacts the wobbler bellcrank, rotating it clockwise. This positions the wobbler bellcrank so that when it restores, it will latch against the ribbon plate in the film ribbon mode or easily move down into the operated position in the IBM Tech III ribbon mode (Figure 19).

As the wobbler bellcrank rotates, its left arm moves the lug of the wobbler eccentric to the rear. The wobbler eccentric lug contacts the right arm of the shock wire disengage lever which pivots on the supply spool post. The left arm of the shock wire disengage lever follows the cam surface of the shock wire. As the left arm moves to the front, it moves the shock wire detent from the ribbon supply spool. This action is necessary to allow the operator to easily wind the leader on to the takeup core when installing a ribbon.

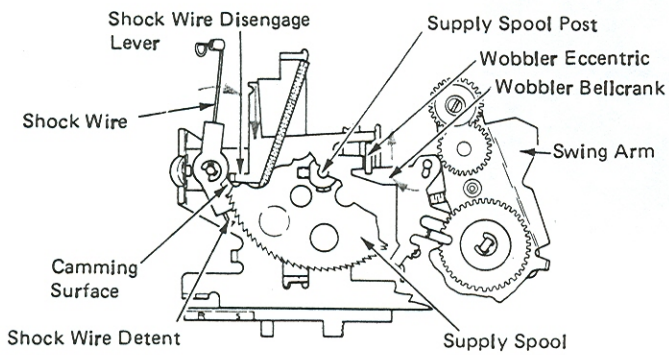

Figure 19 – Load Operation – Wobbler – Release – Shock Wire Disengage (Top View)

SELECTIVE RIBBON ADJUSTMENTS

1. *Ribbon Feed Cam Follower Bracket* – Adjust the ribbon feed cam follower bracket left or right so the ribbon feed pawl is centered in the window of the wobbler cam.

   This adjustment will ensure that the feed pawl will not bind against the wobbler cam and will not move past the outside limits of the feed window.

   The bracket screws can be accessed from below by removing one of the cable anchor bracket screws and pivoting the cable anchor out of the way.

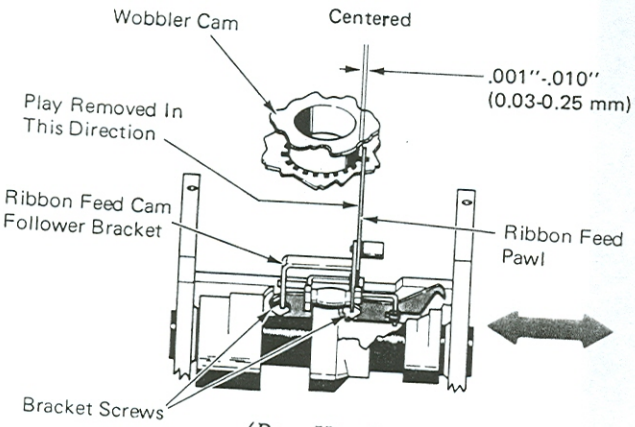

(Rear View)

2. *Ribbon Lift Arm* – Adjust the right-hand lift arm pivot screw for .005"-.010" (0.13-0.25 mm) play of the lift arm. Make this adjustment with the wobbler eccentric lug in an up position.

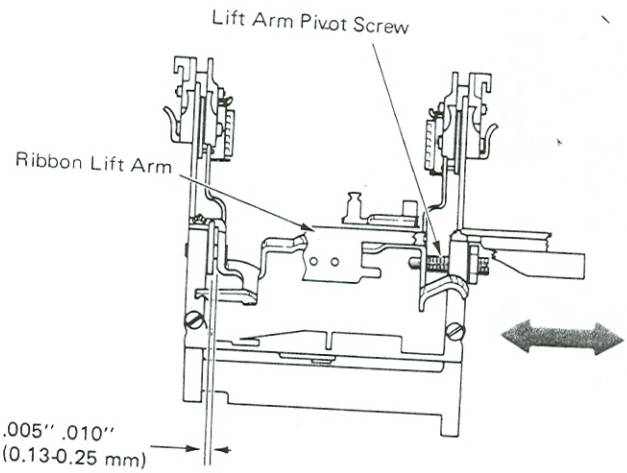

(Top View)

3. *Spiked Driver Post* – The spiked driver post must be parallel to the takeup post within .005" (0.13 mm). This must be checked in two ways.

   NOTE: The swing arm spring should be connected while making these checks.

   a. Hold the Hooverometer edge flat against the takeup post. Allow the swing arm to close until the spiked driver post contacts the other edge of the Hooverometer. The spiked driver post should be flat to the Hooverometer edge within .005" (O.13 mm).

   b. Place a flat surface (such as an aligning wrench) against the takeup post and spiked driver post. The posts should both be flat to the surface within .005" (0.13 mm).

      Form the free end of the swing arm to get these conditions. The symptom of an out of parallel condition will be a bind within the cartridge caused by the used ribbon binding. This could cause feed failures.

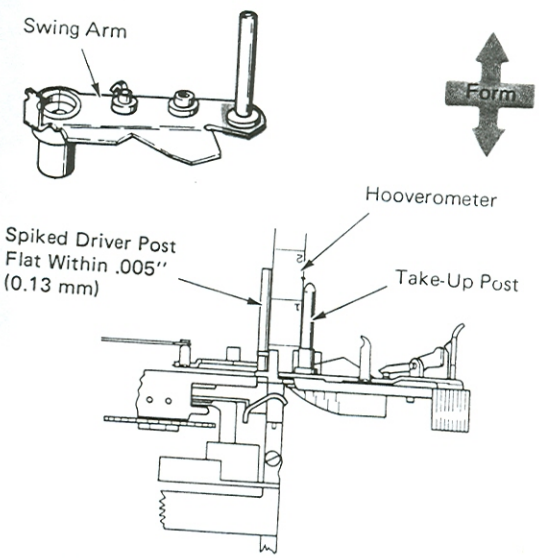

(Front View)

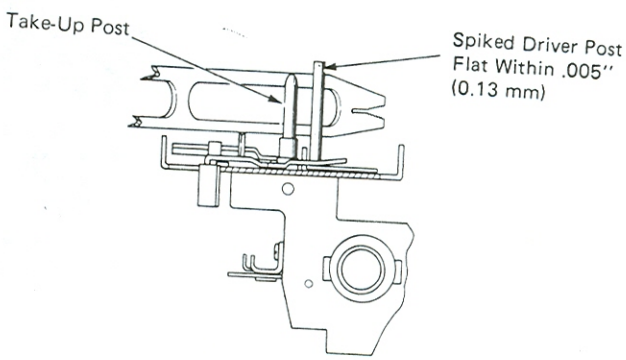

(Right Side View)

4. *Ribbon Lift Cam* – Adjust the ribbon lift cam so the aligning slot is aligned with the front edge of the print sleeve keyway.

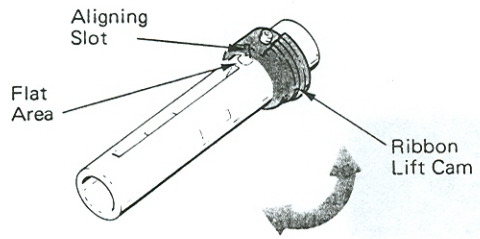

5. *Ribbon Feed Cam Follower Eccentric* – Adjust the ribbon feed cam follower eccentric to cause the ribbon feed pawl to drive the ribbon feed and lift wheel .005"-.010" (0.13-0.25 mm) past the detent position on a high side of the ribbon feed and lift wheel cam surface. Keep the eccentric in the lower front half of its orbit.

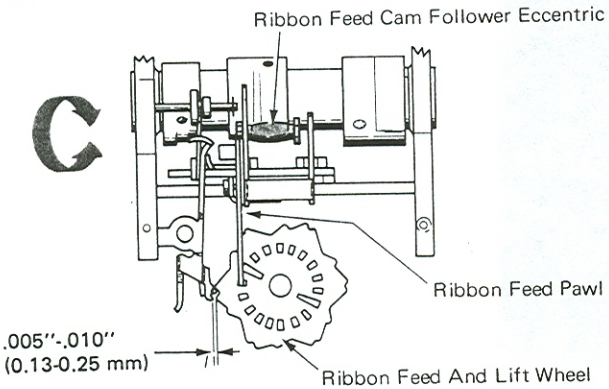

(Top View)

6. *Ribbon Lift Control Lever* – Position the ribbon feed and lift wheel detent in the medium lift position (center cam surface). Form the ribbon lift control lever to position the left edge of the ribbon lift cam follower roller .020"-.030" (0.51-0.76 mm) from the edge of the high lift side. This may also be observed by putting grease on the ribbon lift cam and observing the roller track in the grease on the medium lift cam surface.

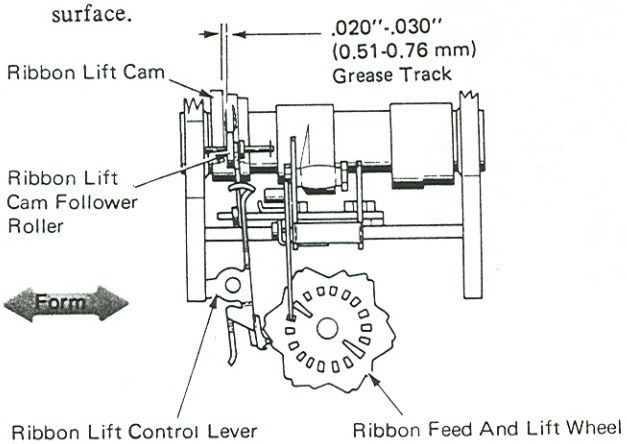

(Top View)

7. *Ribbon Spread Adjusting Plate* – In the film ribbon mode, adjust the ribbon spread adjusting plate front to rear to get .380"-.410" (9.65-10.41 mm) from the bottom of a high lift character to the bottom of a low lift character. This may be measured with the aid of the Hooverometer handle which is .375" (9.52 mm) wide. The play in the ribbon spread adjusting plate must be removed in a clockwise direction as viewed from the left side of the carrier when tightening the binding screws. This is easily done by tightening the screws with the machine half cycled. This takes out the play in the mounting holes in the direction of the lifting force and ensures that the adjustment does not change. Ribbon height must be checked after making this adjustment.

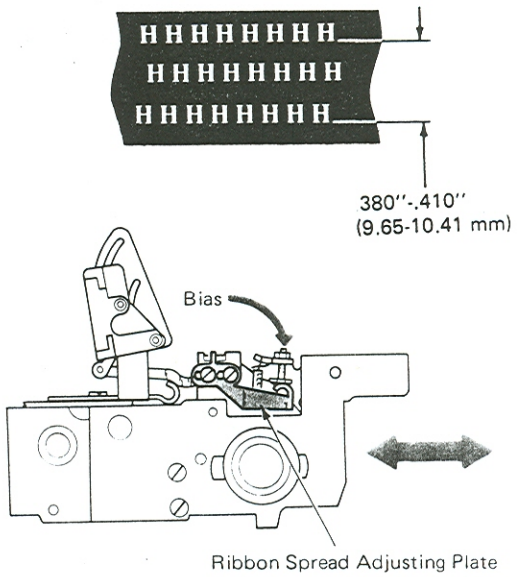

(Left Side View)



Results Of Improperly Adjusted Ribbon Spread Adjusting Plate

8. *Ribbon Lift Height* – In the film ribbon mode, adjust the ribbon height adjusting screw so the bottom edge of the underscore clears the bottom of the ribbon by .030"-.040" (0.76-1.02 mm). Ribbon spread must be checked after making this adjustment.

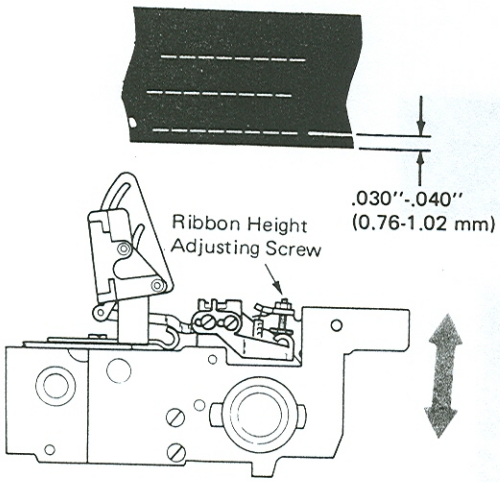

(Left Side View)



Results Of Improperly Adjusted
Ribbon Height Adjusting Screw

9. *Ribbon Lift Arm Lower Stop* – Form the left ribbon lift arm lower stop so the ribbon lift cam follower roller clears the ribbon lift cam by .005"-.025" (0.13-0.64 mm) at rest. This ensures free left-to-right movement of the roller.

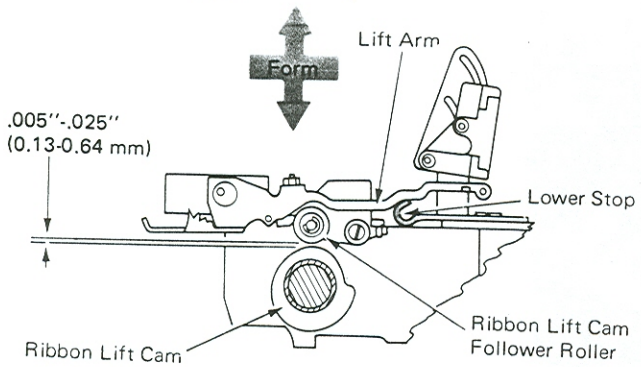

(Right Side View)

10. *Ribbon Shock Wire* – Form the shock wire to be vertical front to rear and left to right. This adjustment may need to be readjusted for proper ribbon tracking through the left ribbon lift guide.

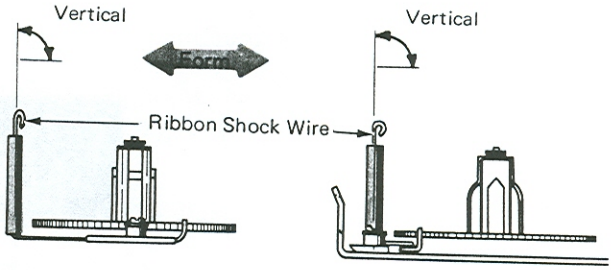

(Left Side View) *(Front View)*

11. *Stencil Adjustment* – Form the stencil lug on the ribbon lift control lever to meet two conditions when the stencil lever is latched in the stencil position.

a. The ribbon feed lockout lug must engage the ribbon feed pawl mounting stud by approximately the thickness of the lockout lug.

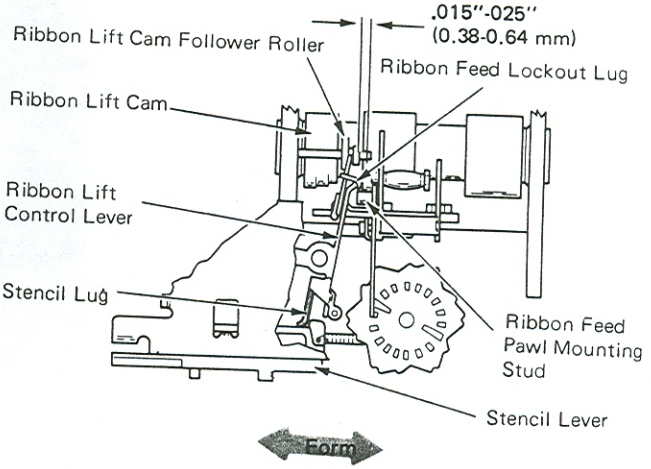

(Top View)

b. The ribbon lift cam follower roller must be moved to the right, completely off the ribbon lift cam, and have .015"-.025" (0.38-0.64 mm) clearance between the roller and the "C" clip at the end of its shaft.

NOTE: During normal typing, in the low lift ribbon position, the ribbon feed lockout lug on the ribbon lift control lever must clear the ribbon feed pawl mounting stud. If necessary, form the ribbon feed lockout lug to get this condition. If the lug is formed, recheck the stencil adjustments.

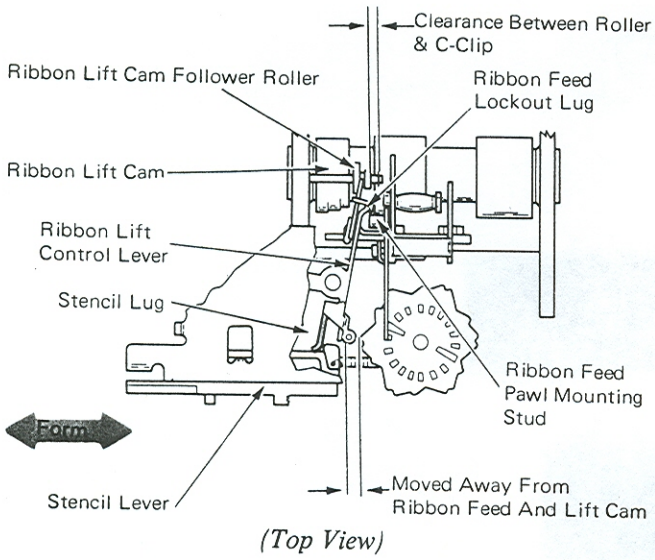

(Top View)

13. *Shock Wire Disengage Lever (Load Position)* – Form the right-hand arm on the shock wire disengage lever so the shock wire detent clears the ribbon supply spool by .020"-040" (0.51-1.02 mm) when the load lever is in the load position. Ensure that the wobbler eccentric lug cannot get under the arm. If necessary, form the

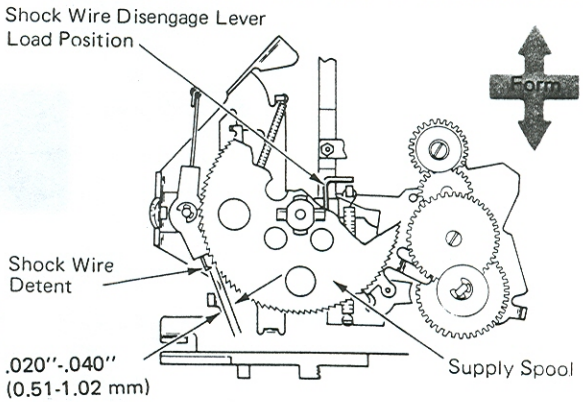

(Top View)

12. *Swing Arm Lug* – Form the lug on the swing arm that contacts the wobbler bellcrank for the following conditions:

    a. So the cam follower stud on the wobbler bellcrank clears the high side of the wobbler cam by .020"-.030" (0.51-0.76 mm) when the load lever is in the load position (Tech III position).

    b. The lug on the wobbler bellcrank should overlap the feed gear by a minimum of .020" (0.51 mm) when the swing arm is on the high point.

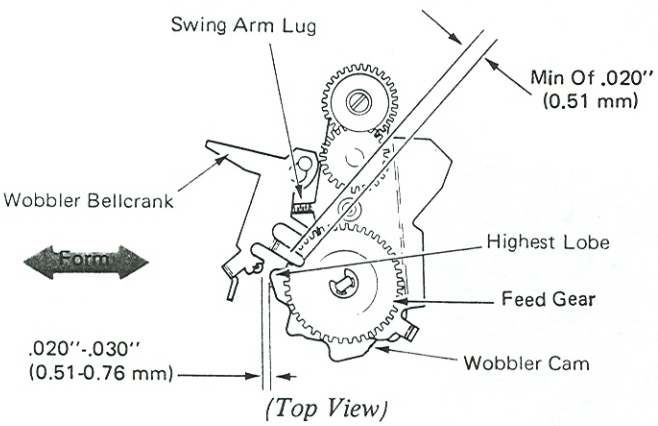

(Top View)

14. *Shock Wire Disengage Lever (Type Position)* – In the IBM Tech III ribbon mode, form the shock wire disengage lever rest position lug so the shock wire disengage lever arm clears the wobbler eccentric by .005"-.015" (0.13-0.38 mm) when the wobbler bellcrank is on the high point of the wobbler cam.

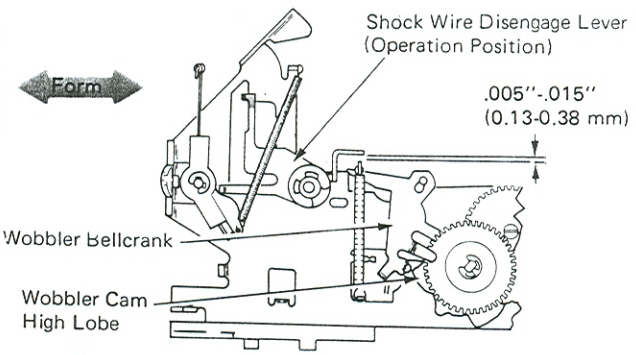

15. *Cartridge Guides* – Form the cartridge guides to center the ribbon take-up and supply cores within the holes in the top of the cartridge. Maintain .005"-010" (0.13-0.25 mm) end play of the cartridge.

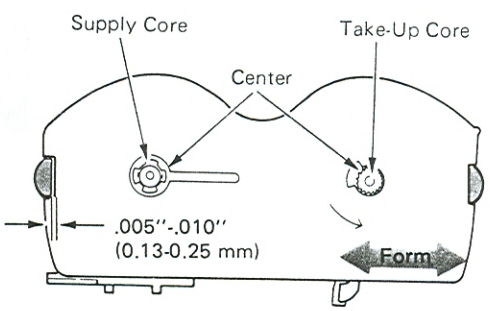

16. *Cartridge Retaining Springs* – Center the cartridge retaining springs in the holes in the cartridge guide lugs. Adjust the springs left to right so they positively hold the IBM Tech III ribbon cartridge down against the ribbon feed plate. Refine the right spring so the take-up core interlock clears the center surface of the take-up post by .005"-.020" (0.13-0.51 mm).

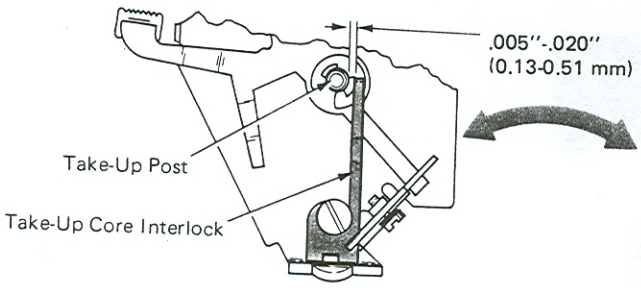

(Top View)

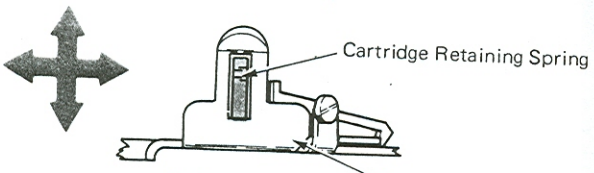

(Right Side View)

17. *Take-Up Core Interlock* – Form the take-up core interlock so that in the load position, the tip of the interlock is .025"-.040" (0.64-1.02 mm) above the top edge of the center step on the take-up post.

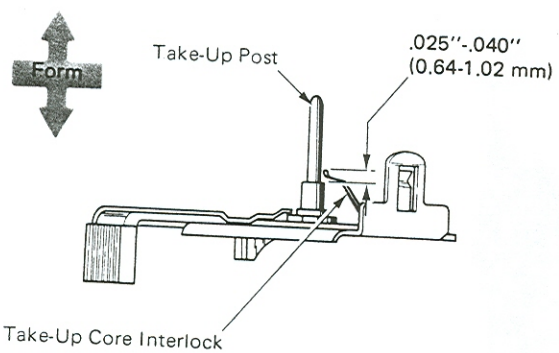

(Right Front View)

18. *Load Lever* – Form the take-up core interlock lug on the load lever to meet two conditions.

a. In the operate position, it must hold the take-up core interlock down completely disengaged from the take-up core.

b. When going from load to operate, the tip of the lug must clear the top surface of the take-up core interlock by enough to reliably depress it.

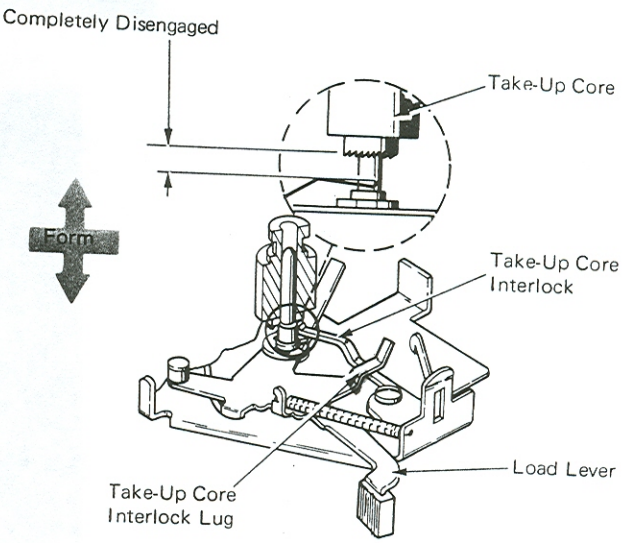

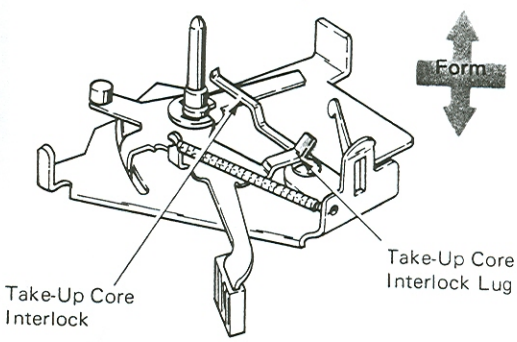

19. *Mode Button Grip Clip* – Adjust the ribbon mode button grip clip up or down on the ribbon feed post to get .005"-.020" (0.13-0.51 mm) clearance between the lower feed gear and the first intermediate gear (with the mechanism in the film ribbon mode). The bottom of the large ribbon feed gear should be flush with the bottom of the small first intermediate gear.

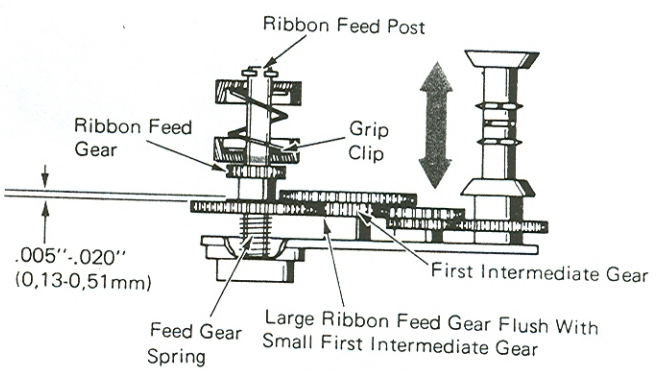

20. *Load Lever Spring* – Form the load lever spring to meet the following conditions:

a. Ensure the load lever spring clears the ribbon feed gear with a minimum of .005" (0.13 mm) in the ribbon load position.

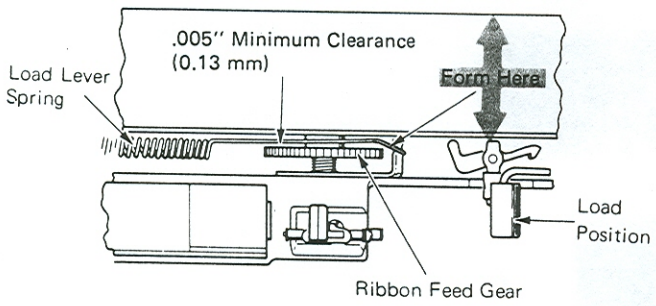

b. Ensure the load lever spring clears the ribbon cartridge in the operated position.

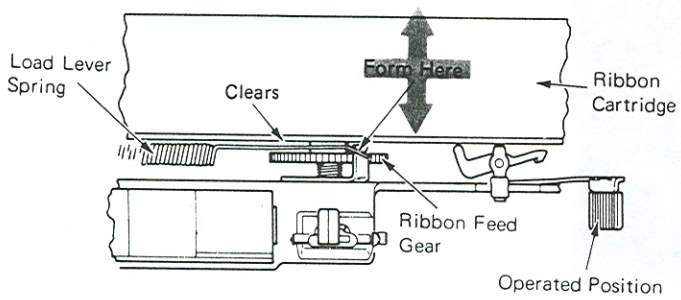

"CORRECTING" OPERATIONAL THEORY

The purpose of the correcting mechanism is to correct original copy errors from the keyboard. A correcting tape supply spool is mounted at the left rear corner of the ribbon plate and a tape take-up spool is mounted at the right rear corner of the ribbon plate (Figure 1). The correcting tape is guided from the tape supply spool on the left, across the front of the cardholder, to the tape take-up spool on the right.

To correct an error, the operator depresses the correcting key and then strikes the incorrect character. As the operator strikes the incorrect character, the correcting tape is lifted between the ribbon and the paper. The impact of the typehead causes the correcting tape to either cover up the character or lift it off of the paper, depending upon which supplies are used. No escapement occurs during this correcting cycle. Since the carrier is still positioned at the point where the error was committed, the operator can type the correct character and resume normal typing.

Each of the correcting tapes is designed to be used with a specific IBM ribbon. The IBM Tech III Cover-up Tape is used with the IBM Tech III Ribbon. (Both are color coded blue.) The Lift-off Tape is used with the IBM High Yield Correctable Film Ribbon. (Both are color coded orange.)

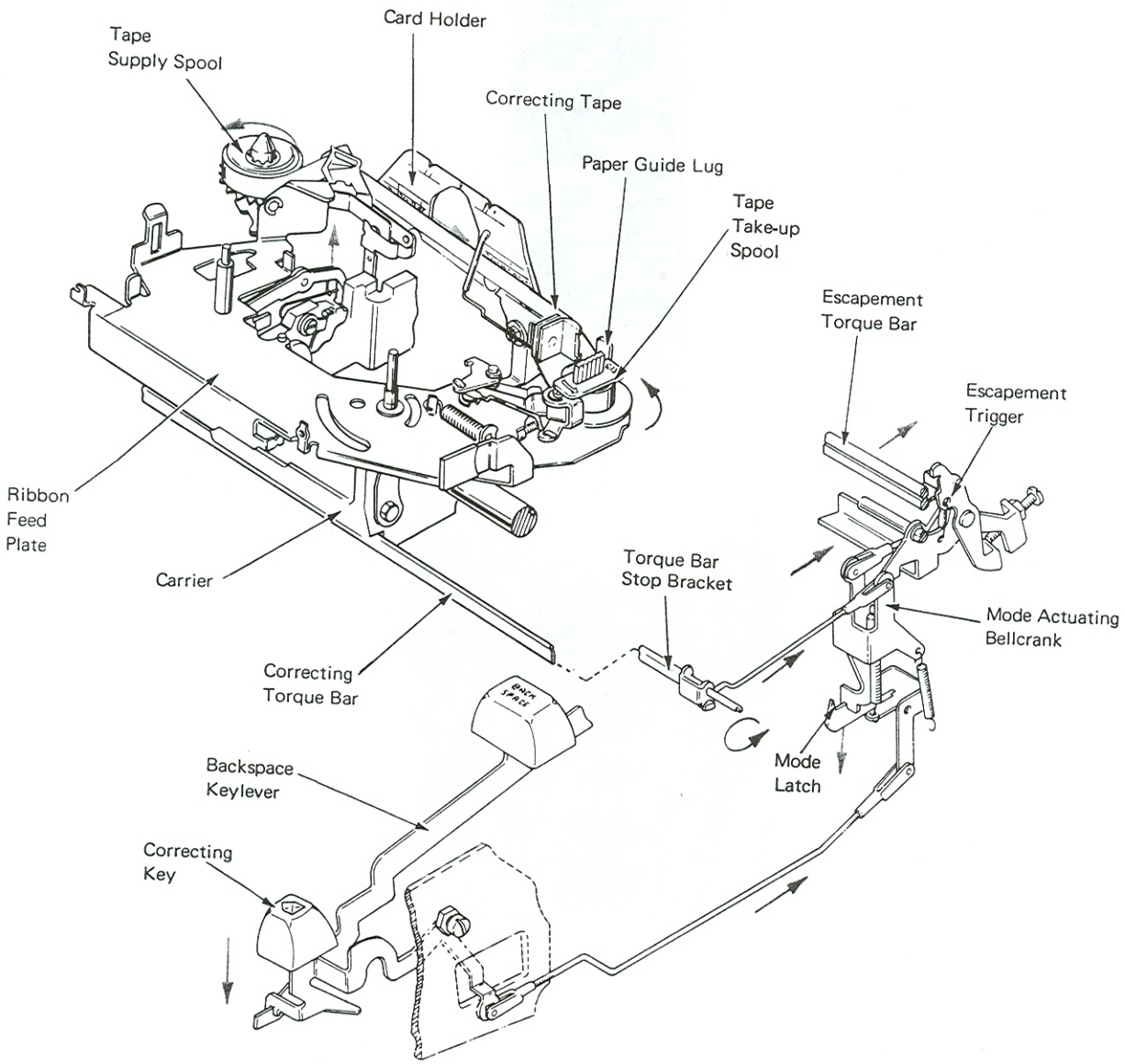

Figure 1 – Correcting Mechanism

CORRECTING MECHANISM LEVELS

Level 1 (PRE-FTB) – This mechanism has the correcting torque bar mounted on the left in a hole in the machine power frame and is known as a pre-floating torque bar (PRE-FTB).

Level 2 (FTB) – This mechanism has the correcting torque bar mounted in brackets that are attached to the front carrier support at both ends. The left bracket has a slot so the torque bar can slide (float) front to rear. This front-to-rear motion helps eliminate binds between the carrier and the torque bar as the carrier moves left to right on the writing line. This is known as the floating torque bar (FTB) mechanism.

CORRECTING TORQUE BAR OPERATION

The correcting torque bar extends across the machine just to the rear of the front carrier support (Figure 2). Its purpose is to activate tape lift and tape feed with the carrier in any position across the writing line.

The correcting keylever performs two operations. First, an actuating lug contacts the front of the backspace keylever which operates the backspace mechanism (see backspace section). Second, the correcting keylever releases the mode actuating bellcrank which will operate the correcting torque bar.

NOTE: Complete operational theory of the backspace mechanism is covered in the "Backspace" section of the "Selectric" Typewriter Service Manual.

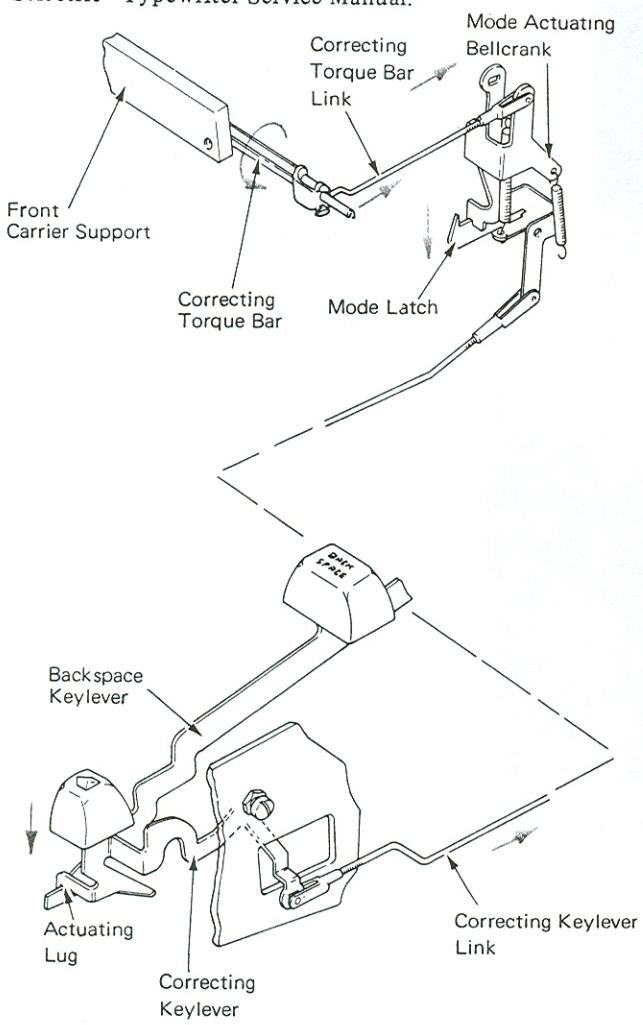

Figure 2 – Correcting Torque Bar Operation

As the correcting keylever is depressed, it moves the correcting keylever link to the rear. The link rotates the mode latch down. Rotating the latch releases the mode actuating bellcrank, allowing it to pivot top to rear under spring load. A correcting torque bar link extends from the bellcrank forward to the correcting torque bar and pivots it bottom to rear. The rotation of this torque bar activates tape lift and tape feed.

CORRECTING TAPE LIFT

The tape lift mechanism is located on the left side of the carrier (Figure 3). As the correcting torque bar is rotated to its actuated position, it pivots the tape lift actuating arm top to front which slides the lift arm and latch assembly forward. This positions the lift latch above the lift cam follower.

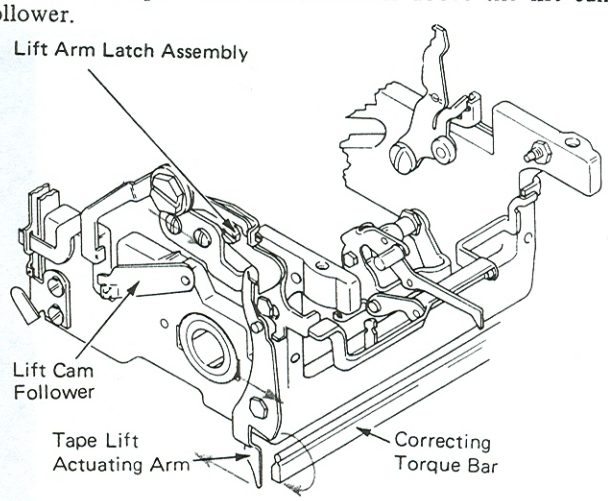

Figure 3 – Lift Arm And Latch (Left Side View)

When the print sleeve rotates, the tape lift cam raises the tape lift cam follower which raises the lift arm and latch assembly (Figure 4). As the lift arm and latch assembly is raised, an extension on the rear of it will raise the tape lift assembly. An arm on the tape lift assembly engages the tape supply cradle fork on the tape supply cradle assembly. As the tape lift assembly raises, the cradle assembly is tilted to maintain tape alignment and prevent folding of the correcting tape.

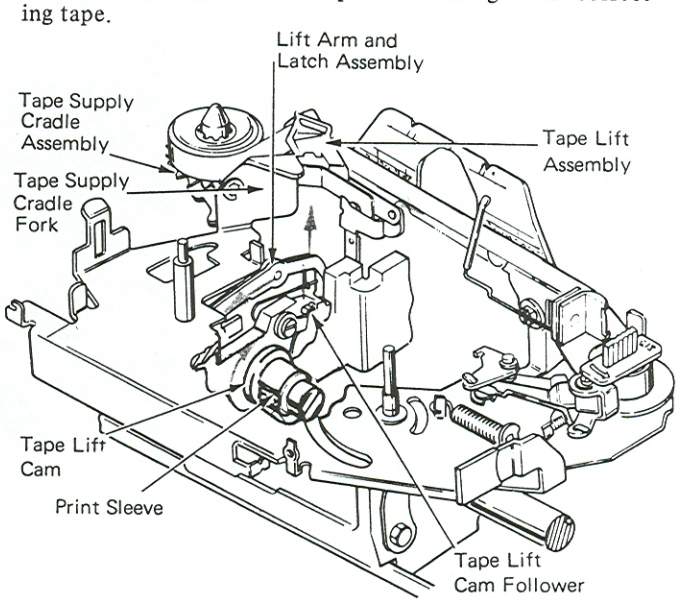

Figure 4 – Tape Lift Operation

CORRECTING TAPE FEED

The correcting tape feed mechanism is located on the right side of the carrier (Figure 5). It is designed so that the correcting tape is fed in two parts. One-third is fed before print and two-thirds is fed after print. This is done by a tape feed cam with two high points, the second high point supplying two times as much motion as the first. The first one-third is to remove slack in the tape before the correction operation. This prevents the tape from sticking to the paper. The second feed operation is to advance the tape.

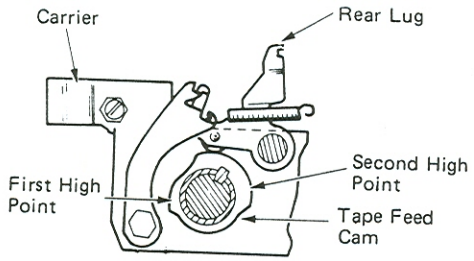

(Figure 5 – FTB Right Side View)

The FTB feed mechanism is activated by the correcting torque bar (Figure 6) moving the top of the tape lift actuating arm to the front. The lift actuating arm pushes the inhibitor actuation bellcrank, which rotates the top of the tape feed inhibitor out of the path of the tape feed cam follower.

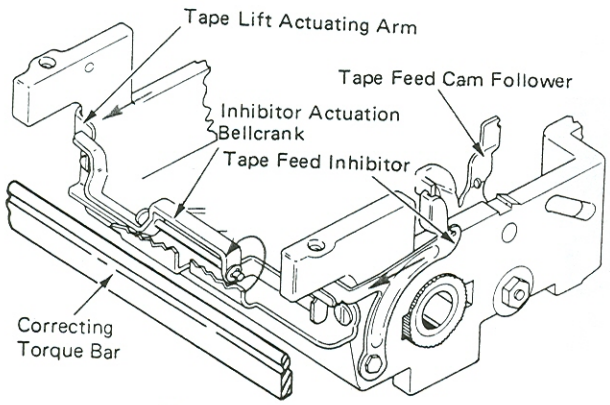

Figure 6 – Tape Feed At Rest

The PRE-FTB feed mechanism is activated by the operation of the correcting torque bar in the same way as the tape lift mechanism. The torque bar rotates the step on the tape feed inhibitor out of the path of the tape feed cam follower (Figure 7).

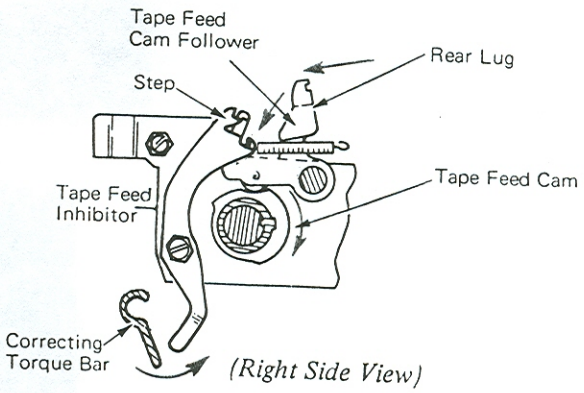

Figure 7 – Pre-FTB Tape Feed At Rest

As a print operation occurs and the tape feed cam rotates (Figure 8), the tape feed cam follower is allowed to follow the shape of the tape feed cam from its highest point toward its low point. The rear lug on the follower moves forward allowing the spring loaded tape feed pawl to rotate counterclockwise by means of a feed bellcrank and feed link, engaging the window in the spiked wheel.

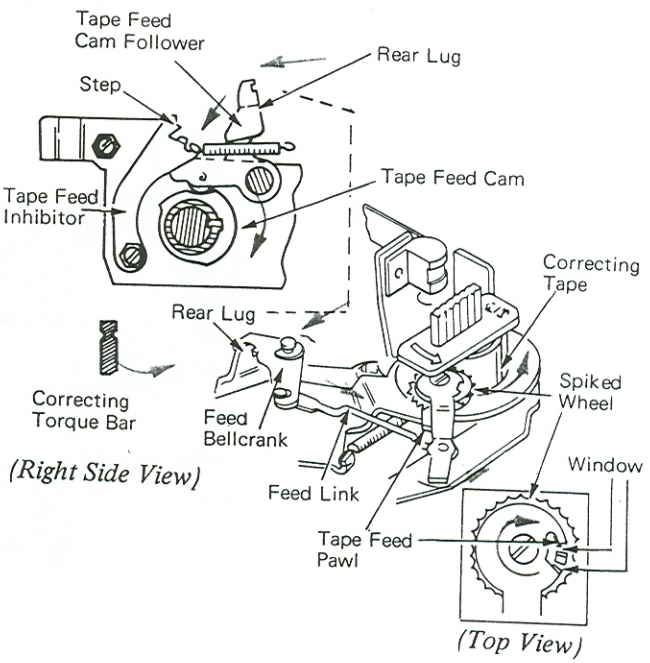

Figure 8 – Tape Feed Inhibitor

The tape feed cam then rotates to its first high point. The tape feed pawl by means of the cam follower, feed bellcrank and link rotates the spiked wheel clockwise for the first one-third tape feed (Figure 9). The feed cam then rotates to the low point again. The follower is prevented from contacting the cam on its low point by the inhibitor. The inhibitor prevents placing the heavy cam follower spring load on the cam during print which occurs at this time. The cam then begins its rise to the second high point and the cam follower causes the correcting tape to be fed the remaining two-thirds of the tape feed.

The spiked wheel which is mounted on the tape feed swing arm is heavily spring loaded toward the tape take-up spool. This causes the spikes on the wheel to engage the used tape. As the spiked wheel rotates, it causes the take-up spool to rotate, pulling new tape into the print position and winding up the used tape.

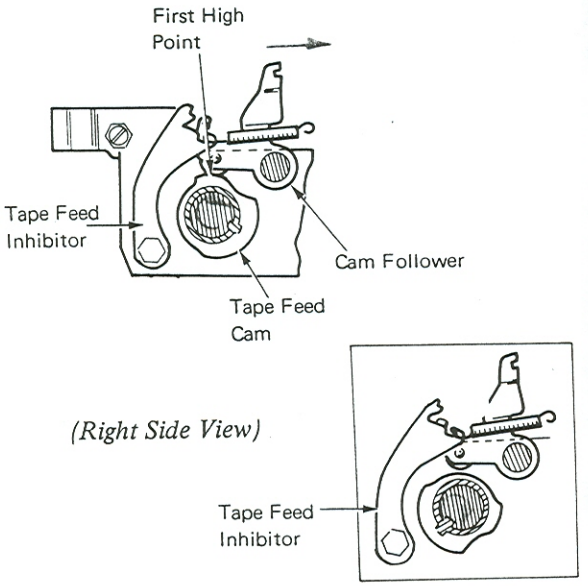

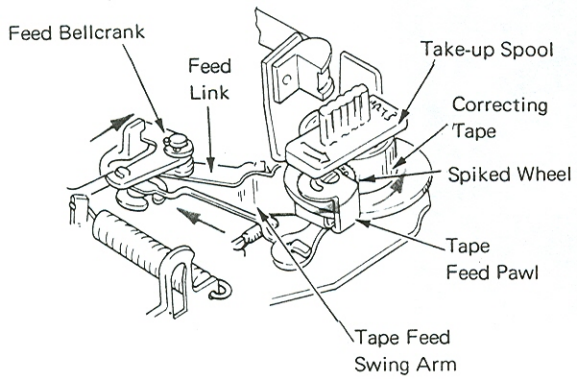

Figure 9 – Tape Feed Operation

TAPE BIAS (CONTROL) SYSTEM

The correcting tape supply cradle assembly contains a bias system that performs three functions. First, the detent on the high bias spring prevents the supply spool from being rotated clockwise (Figure 10).

Second, a low bias is supplied for use with the IBM Tech III Cover-up Tape. This bias is produced by a low bias spring. As tape is being pulled off the supply spool and the tape supply spool ratchet turns counterclockwise, the detent on the high bias spring is moved over a tooth on the ratchet. The other end of the high bias spring, which contacts a vertical lug on the sensing shoe arm, pivots the arm. The low bias spring connected to the vertical lug on the sensing shoe arm produces the low bias.

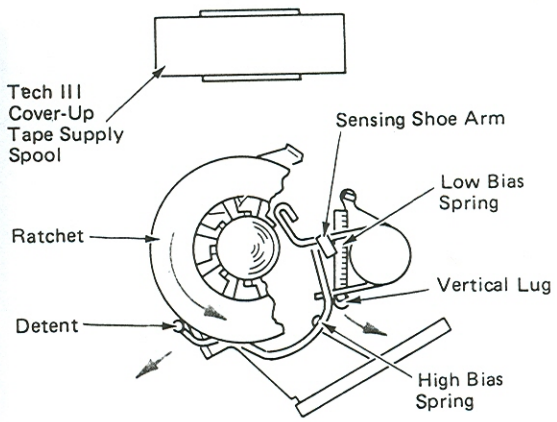

(Top View)

Figure 10 – Low Bias Operation

Finally, high bias is developed for use with the Lift-off Tape. As the detent on the high bias spring moves over a tooth on the ratchet, high bias is developed due to lugs on the bottom of the lift-off tape supply spool preventing the sensing shoe from rotating inward (Figure 11). This causes the high bias spring to flex, producing the high bias.

One lug on the bottom of the Lift-off Tape supply spool has been shortened. This allows the spool to bottom completely on the supply spool ratchet if the sensing shoe is under a window in the ratchet while the operator is loading the tape.

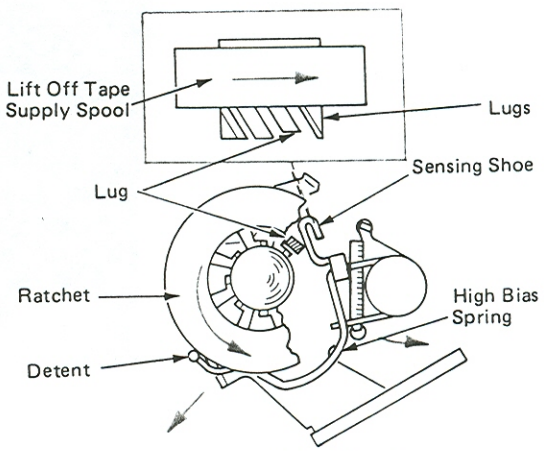

(Top View)

Figure 11 – High Bias Operation (Top View)

ESCAPEMENT TRIGGER OPERATION

The escapement trigger is disengaged from the escapement torque bar to prevent escapement during a correcting cycle. Disengagement of the trigger is done from the mode actuating bellcrank through the trigger link (Figure 12). As the bellcrank rotates to its activated position, the escapement trigger is rotated top to rear out of engagement with the torque bar. It is held in this disengaged position by the spring tension on the mode actuating bellcrank until the trigger lever is operated either through a print or spacebar operation.

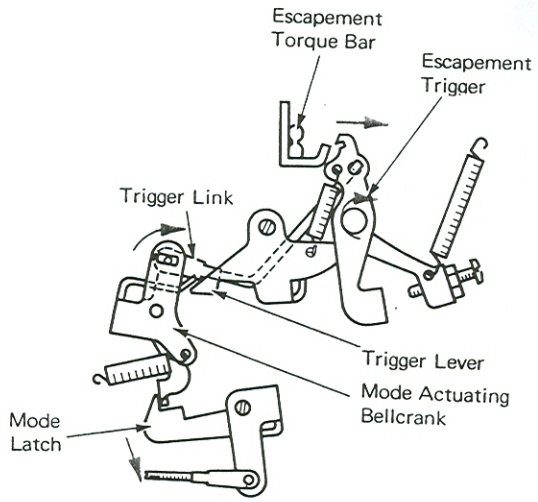

(Right Side View)

Figure 12 – Escapement Trigger Disengaged

The next time a print or spacebar cycle is started the trigger will not contact the escapement torque bar and no escapement operation will result (Figure 13). As the trigger is pulled down during this cycle a forward extension of the trigger lever will contact the mode actuating bellcrank and rotate it back to its latched position. This restores the complete correcting mechanism to rest.

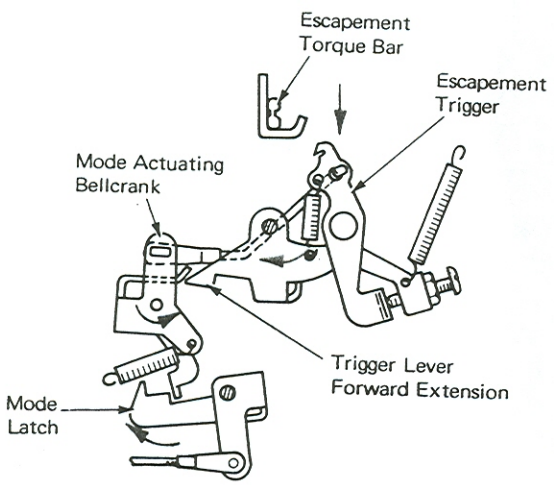

(Right Side View)

Figure 13 – Escapement Trigger Actuated

CORRECTING TAPE LOAD

When the correcting tape needs to be changed, the tape load lever is moved to the right to the load position (Figure 14). The load lever performs three functions to help installation and removal of the tape.

1. A tape guide mounted on the rear of the load lever pivots forward.

2. A separator wire is pivoted top to the front by means of a cam slot in the load lever.

3. The spiked wheel which is mounted on the tape feed swing arm is pivoted forward by a lug on the load lever.

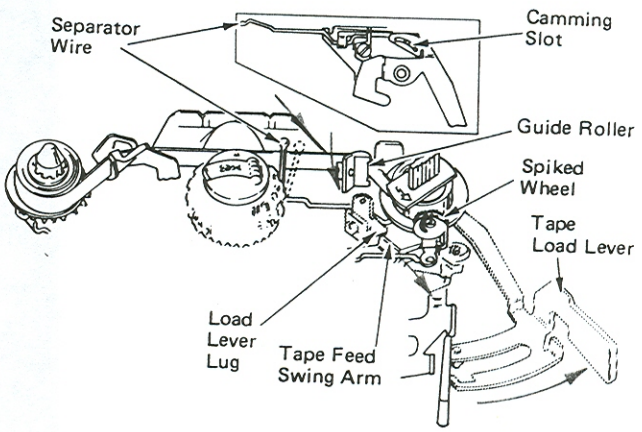

Figure 14 – Tape Load

LOAD INTERLOCKS

A toggle spring holds the tape load lever in either the load or type position (Figure 15A). An extension on the toggle spring engages a hole in the ribbon load lever so it cannot be moved to the load position while the tape load lever is in the load position. When the ribbon load lever is operated (Figure 15B), an extension on the ribbon load lever enters a notch in the tape load lever to prevent operating the tape load lever to the load position.

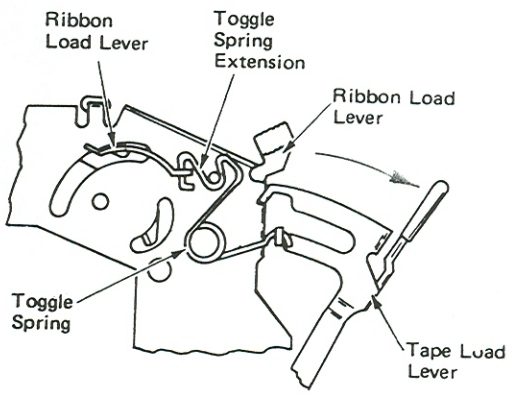

(Bottom View)

Figure 15A – Ribbon Load Lever Load Position

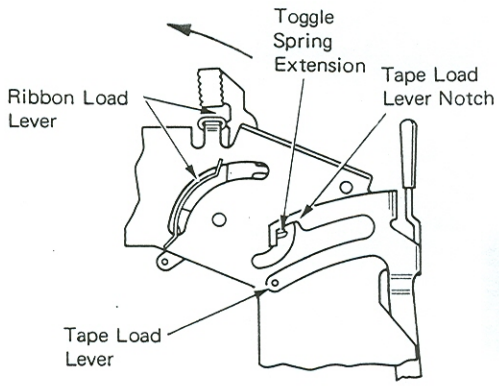

Tape Load Lever Type Position (Bottom View)

Figure 15 B – Load Interlocks

To prevent the operator from turning the take-up spool in the wrong direction when taking up the slack, a take-up spool detent engages a ratchet on the bottom of the take-up spool (Figure 16).

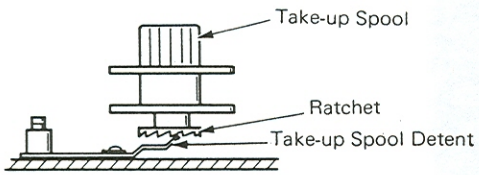

Figure 16 – Take-up Spool Detent

"CORRECTING" MECHANISM ADJUSTMENTS

1. *Correcting Keylever Side Play* – Adjust the keylever mounting screw so the correcting keylever has .001"-.004" (0.03-0.10 mm) side play.

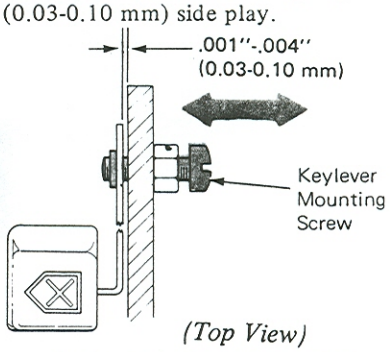

(Top View)

2. *Backspace Keylever* – Form the backspace keylever so that it centers in the notch on the correcting keylever.

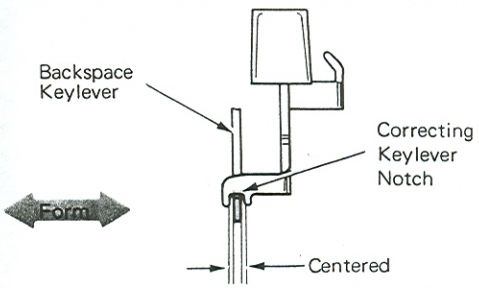

NOTE: Adjustments 3 through 5 are for machines with a field-installed correcting keybutton interlock.

3. *Correcting Keybutton Interlock (Front To Rear)* – Form the correcting keybutton interlock front to rear to get .001"-.030" (0.03-0.76 mm) between the horizontal part of the correcting keylever and the interlock.

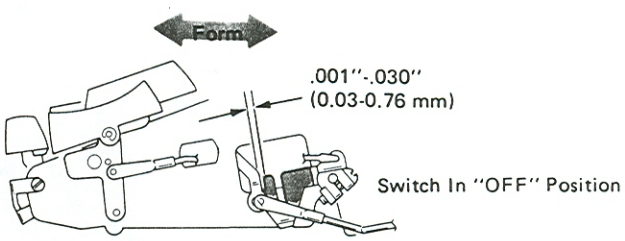

(Right Side View)

4. *Lockout Bail Link* – With the switch in the OFF position, adjust the lockout bail link so the horizontal part of the correcting keylever is centered on the locking surface of the correcting keybutton interlock.

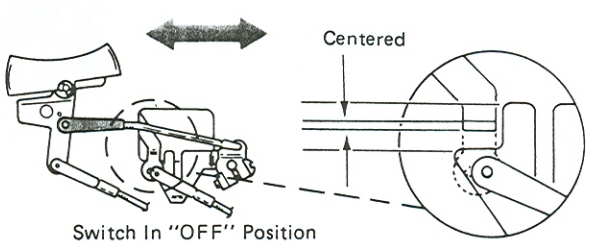

(Right Side View)

5. *Correcting Keybutton Interlock And Lockout Bail* (This part is not on all machines). – With the machine in the OFF position, adjust the correcting keybutton interlock for the following conditions:

a. Position the correcting keybutton interlock left to right to get .005"-.020" (0.13-0.51 mm) between the keyboard side frame and the lockout arm.

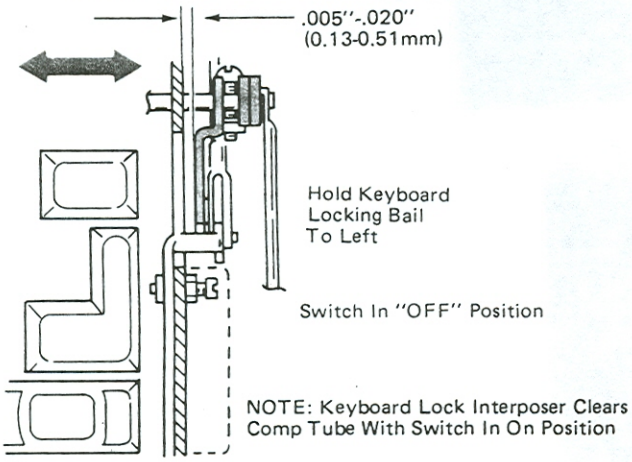

b. Position the lockout bail under the cycle clutch latch lug.

NOTE: The keyboard lock interposer must clear the compensator tube with machine in the ON position.

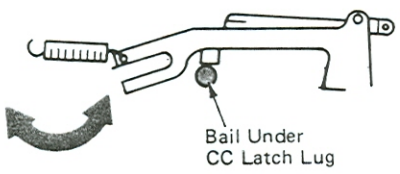

6. *Correcting Keylever Link* – Adjust the correcting keylever link clevis so that the mode latch releases the mode actuating bellcrank, at the same time or slightly before, the backspace cam is released.

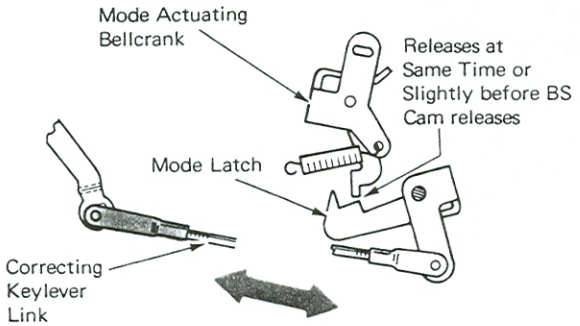

(Right Side View)

7. *Mode Actuating Bellcrank* – Form the lug on the mode actuating bellcrank so the bellcrank overthrows the mode latch by .005"-.010" (0.13-0.25 mm) when the escapement trigger lever is fully operated.

Check this adjustment on the cam that supplies the least amount of overthrow, either the spacebar or the escapement cam.

NOTE: Check trigger knockoff in the escapement adjustments after making this adjustment.

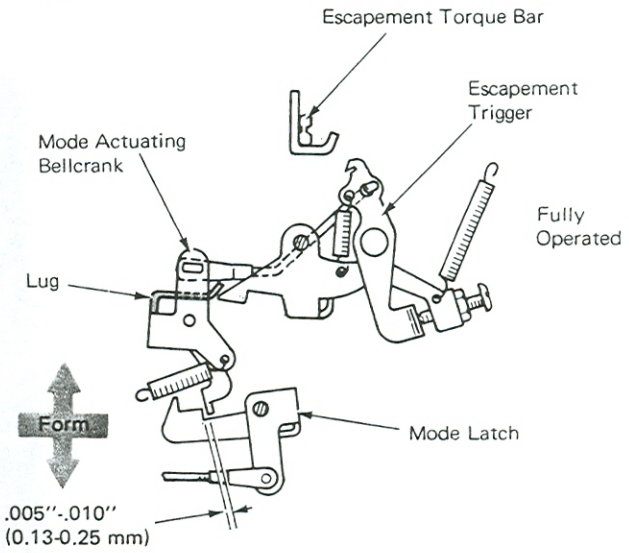

(Right Side View)

8. *Trigger Link* – With the mode actuating bellcrank released, adjust the trigger link clevis so that the working surface of the trigger clears the escapement torque bar lug by .005"-.020" (0.13-0.15 mm).

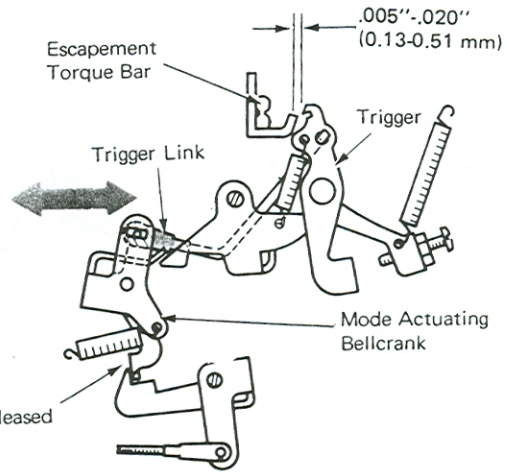

(Right Side View)

9. *Cable Guide Bracket* – Form the velocity control cable guide bracket as far to the rear as possible with minimum clearance to the power frame. The bracket must keep the velocity control cable from getting behind the carrier.

NOTE: Check that the guide bracket clears the frame at the far left margin.

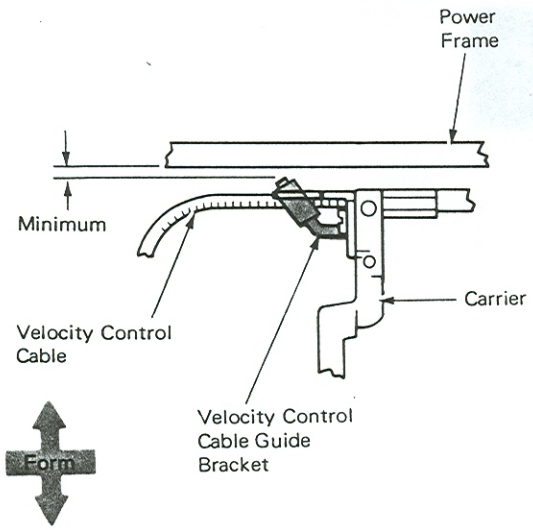

(Top View)

10. *Cable Guide Lug* – Form the cable guide lug on the tape lift assembly front to rear so it is centered between the rotate arm assembly and the power frame when the carrier is at the far left margin.

NOTE: Be sure to maintain enough left-to-right angle to ensure the velocity control cable moves under the carrier when the carrier is at the far left margin.

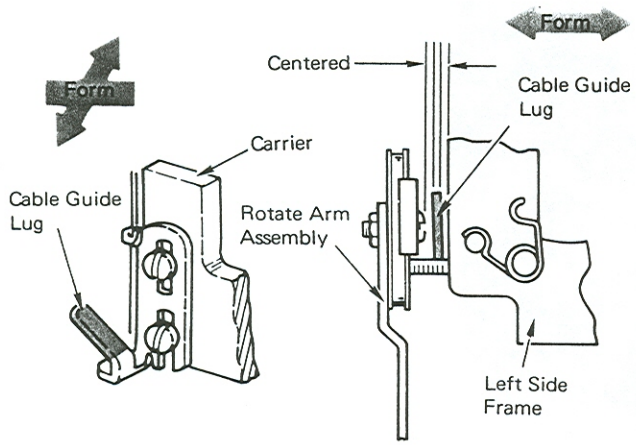

(Left Side View) (Carrier At Far Left Margin)

NOTE: The platen adjustments must be correct before making the following adjustments.

11. *Cardholder* – With the copy control lever forward, adjust the cardholder mounting brackets to satisfy the following condition:

a. Front to rear so that the cardholder clears the platen by .020"-.030" (0.51-0.76 mm). Adjust the right bracket and form the left leg to meet this condition.

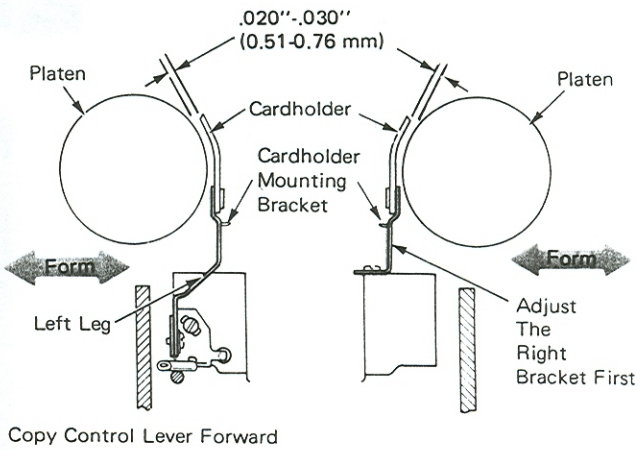

Copy Control Lever Forward

(Left Bracket Left Side View)

(Right Bracket Right Side View)

b. Position the mounting bracket left and right and up or down so the horizontal line on the cardholder rests .002"-.005" (0.05-0.13 mm) below the writing line. The vertical lines must be centered on a printed character.

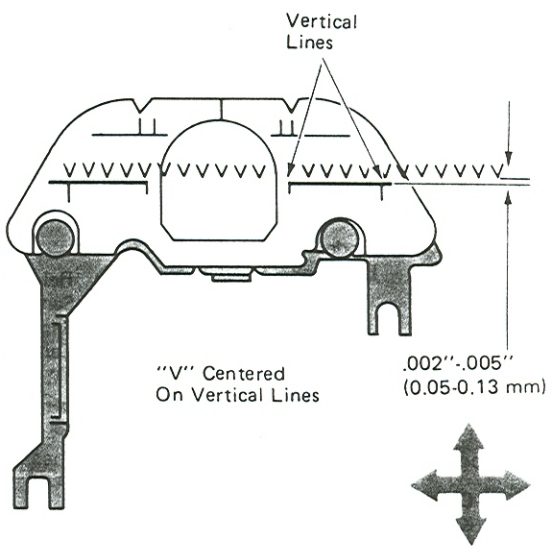

12. *Ribbon Lift Guide (Left Only)* –

a. With the machine half cycled and the ribbon in the center lift position, adjust the left ribbon lift guide assembly front to rear for .190"-.210" (4.83-5.33 mm) between the rear face of the guide and the platen.

NOTE: This clearance can be easily checked by using the handle end of the 224 backspace adjustment wrench (P/N 9900369).

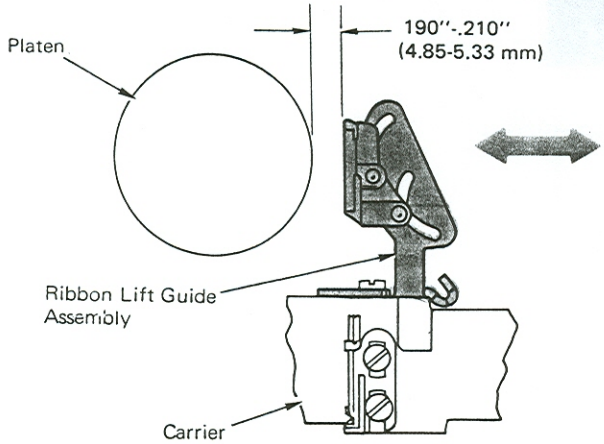

(Left Side View) (Machine Half-Cycled. Ribbon In A Center Lift Position)

b. Position the left-hand lift guide left to right for .030" (0.76 mm) minimum clearance between the front of the lift guide and the left arm and latch assembly.

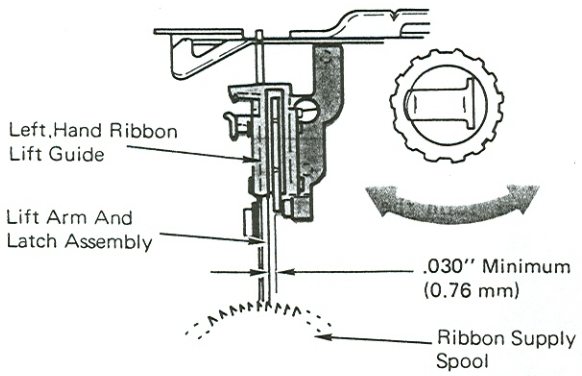

(Top View)

13. *Tape Lift Assembly* – Adjust the tape lift assembly to satisfy the following conditions:

a. Front to rear so that the tape clears the front of the cardholder by .010"-.020" (0.25-0.51 mm). The tape supply cradle fork must be loose while making this adjustment (reference adjustment 14).

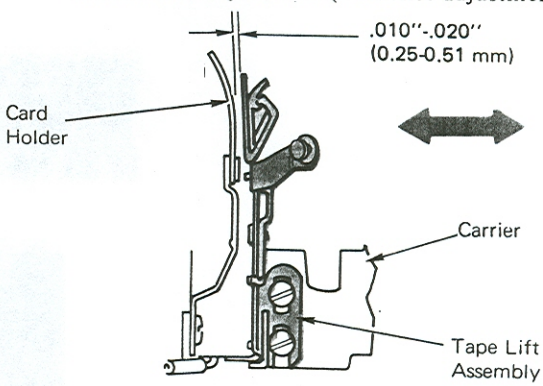

(Left Side View) (Tape Supply Cradle Fork Loose)

b. Vertically so that the bottom of the underscore clears the top of the tape by .001"-.005" (0.03-0.13 mm) when the tape is at rest and the underscore is in the print position.

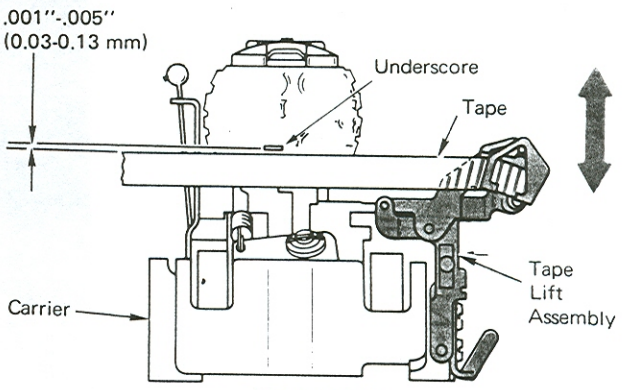

(Rear View)

14. *Tape Supply Cradle Fork* – Position the cradle fork so that it centers in the groove of the stud mounted on the tape lift assembly.

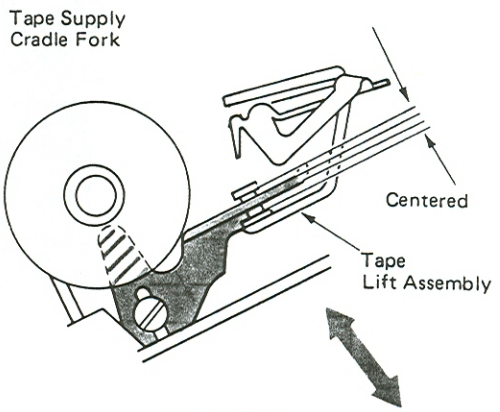

(Top View)

15. *Torque Bar Back-Up Lug* –

a. *PRE-FTB* – Adjust the velocity control bracket so that the back-up lug on the bracket has a clearance of .001"-.006" (0.03-0.15 mm) with the correcting torque bar with the carrier positioned at the far left margin.

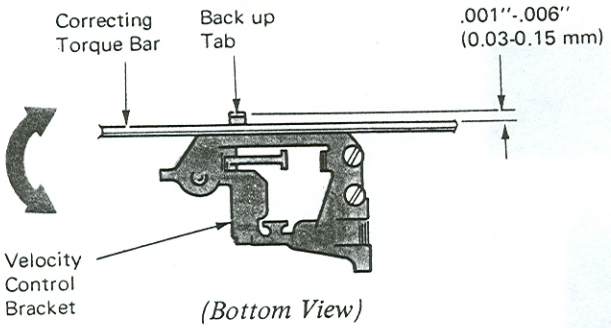

(Bottom View)

b. *FTB* – Move the carrier to the left until the adjusting clip is positioned between the intermediate drive gear and the LH side frame. Adjust the clip front to rear for .065"-.070" (1.65-1.78 mm) clearance between the back-up lug and the front support.

Check to ensure the clip has not rotated clockwise when tightening, causing a bind between the lugs on the guide and the torque bar.

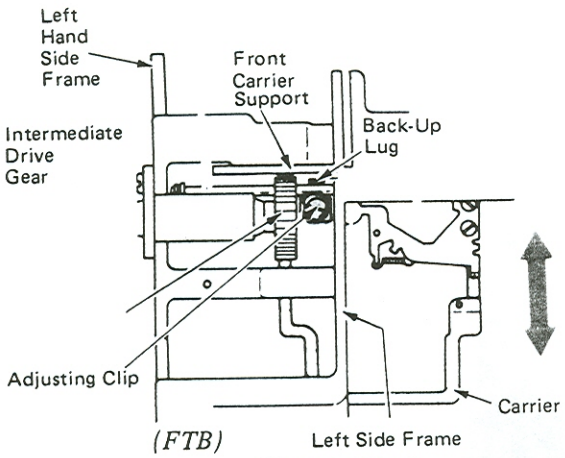

(FTB)

(Bottom View)

16. *Correcting Torque Bar End Play* – Position the collar on the left end of the correcting torque bar left or right so the torque bar has .003"-.010" (0.08-0.25 mm) end play.

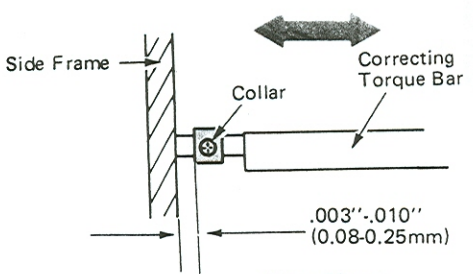

(Top View)

(Pre FTB)

17. *Torque Bar Stop Bracket (PRE-FTB Only)* – Adjust the torque bar stop bracket located at the right end of the torque bar front to rear for a clearance of .010"-.015" (0.25-0.38 mm) between the bracket and the top of the correcting torque bar.

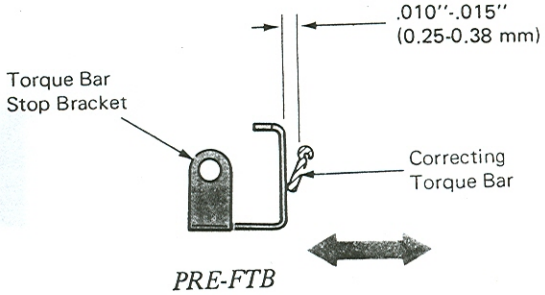

PRE-FTB

(Right Side View)

18. *Torque Bar Link (Preliminary)* – Manually hold the torque bar vertical and adjust the torque bar link clevis to just reach the distance to the correction bellcrank. The pin in the clevis must be in the front position of the slot in the bellcrank; reconnect link. THE TORQUE BAR SHOULD NOW BE VERTICAL.

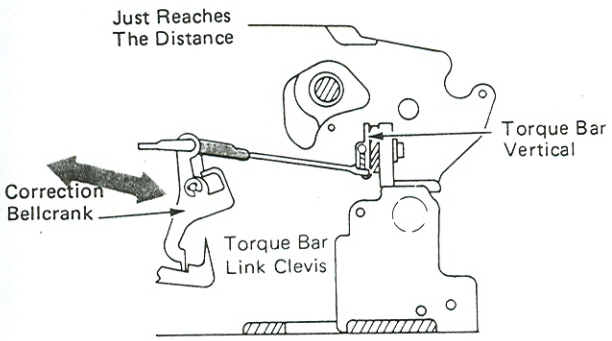

Correction Mechanism At Rest. Latched Condition

19. *Lift Actuating Arm (PRE-FTB)* – With the torque bar at rest, form the lift actuating arm for a clearance of .001"-.005" (0.03-0.13 mm) between the lift actuating arm and the correcting torque bar at the closest point.

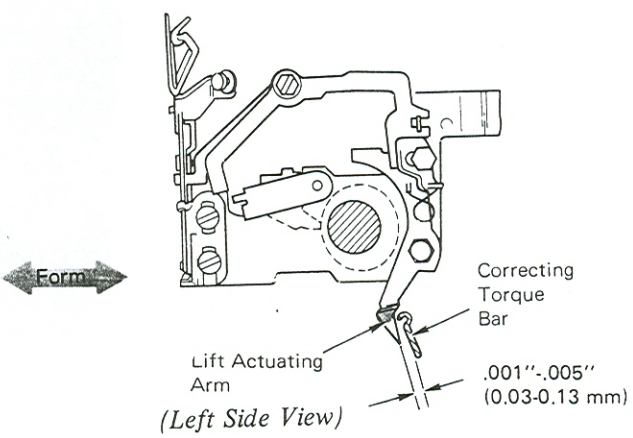

(Left Side View)

NOTE: This adjustment can most easily be made from the bottom of the machine.

Lift Arm Stop –

a. *Lift Arm Stop (FTB)* – Adjust the lift arm stop for .001"-.005" (0.03-0.13 mm) clearance between the working surface of the lift actuating arm and the torque bar.

Form the tip of the lift actuating arm to get a minimum of .002" (0.05 mm) below the bottom of the torque bar, at the torque bar's lowest point (center of writing line).

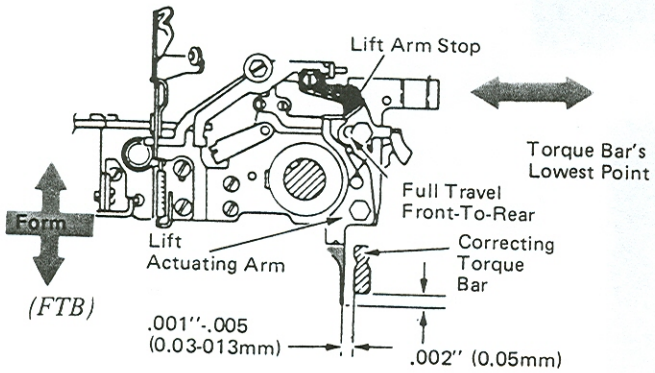

b. Raise the front carrier support for .001"-.004" (0.03-0.10 mm) clearance with no carrier binds. If adjustment of support does not get clearance below the torque bar, form the actuating arm down. Check to ensure the lift actuating arm is free of binds if forming was required. Check for possible interference with gear train idler gear.

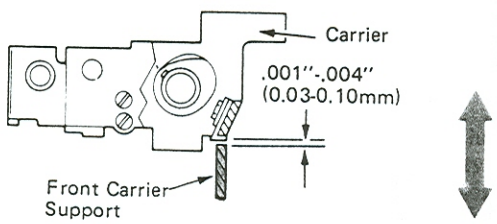

20. *Lift Arm Latch (PRE-FTB)*– Adjust the lift arm latch to satisfy the following conditions:

a. With the correcting mechanism at rest, position the lift arm latch front to rear so the tape lift cam follower clears it by .010"-.015" (0.25-0.38 mm).

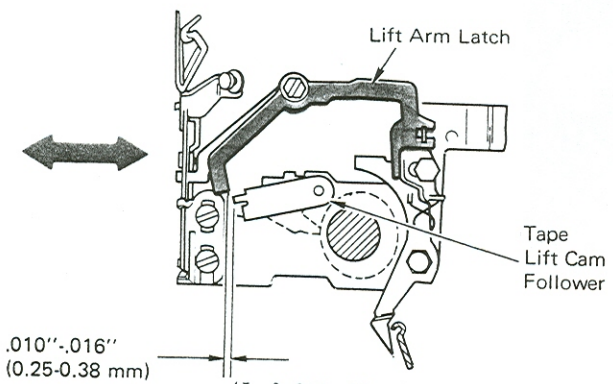

(Left Side View)

b. With the print mechanism at rest and the correcting torque bar operated, the bottom of the lift arm latch must clear the lift cam follower by .005"-.010" (0.13-0.25 mm).

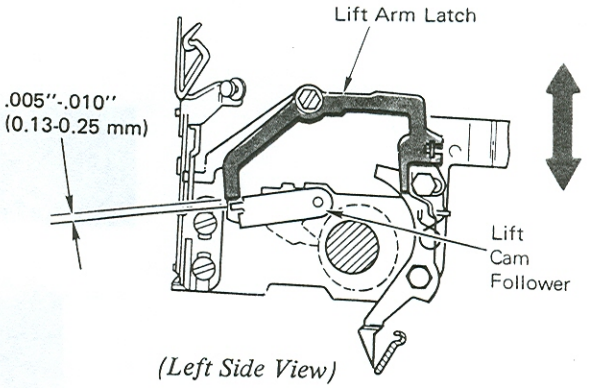

(Left Side View)

Lift Arm Latch (FTB) –

c. *Tape Lift Latch Front To Rear* – With the machine at rest, adjust the lift latch front to rear for .001"-.010" (0.03-0.25 mm) clearance between the rear of the tape lift cam follower and the front lug on the tape lift latch.

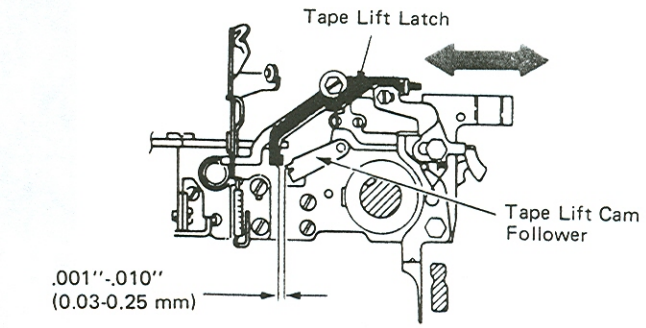

Machine At Rest: Correction Latched

d. *Tape Lift Latch Height* – With the machine at rest and the correction mechanism activated, adjust the tape lift arm latch vertically for a .005"-.025" (0.13-0.64 mm) clearance between the bottom of the latch and the lift cam follower.

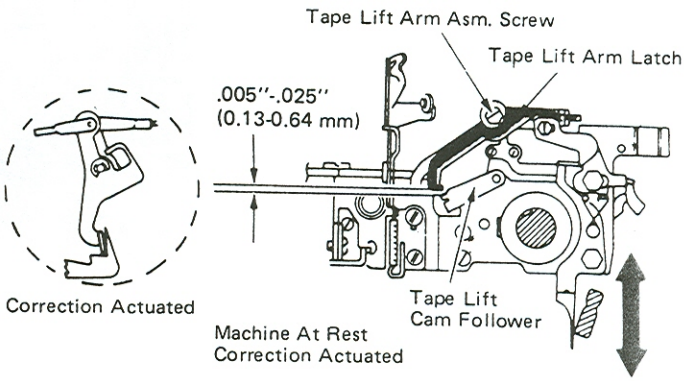

Torque Bar Link Adjustment (Final) – With the machine at rest and the correction mechanism actuated, adjust the link for a minimum overlap of .010"-.050" (0.25-1.27 mm) overlap. Also, the actuating arm must not be bottomed against the arms' mounting stud. If there is no forward travel of the arm assembly, readjust the link for a minimum of .001" (0.03 mm) motion. This is to make sure the system is not binding off.

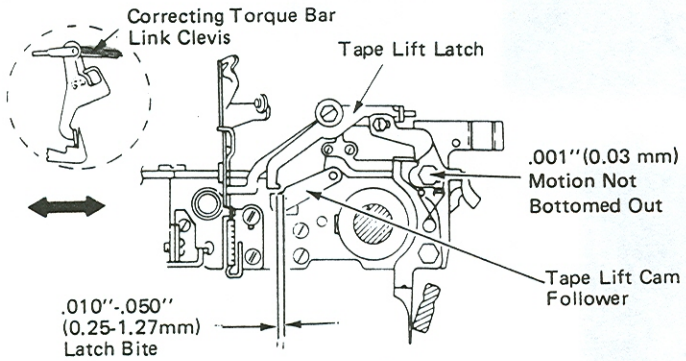

Machine At Rest: Correction Actuated

21. *Tape Feed Cam Follower, Front Lug (PRE-FTB)* – With the machine at rest, form the front lug on the follower to satisfy both of the following conditions:

a. Front to rear so the tape feed inhibitor clears the correcting torque bar by .004"-.010" (0.10-0.25 mm) at the closest point across the writing line with all parts at rest.

b. Vertically so that the bottom of the lug clears the tape feed inhibitor step by .004"-.008" (0.10-0.20 mm).

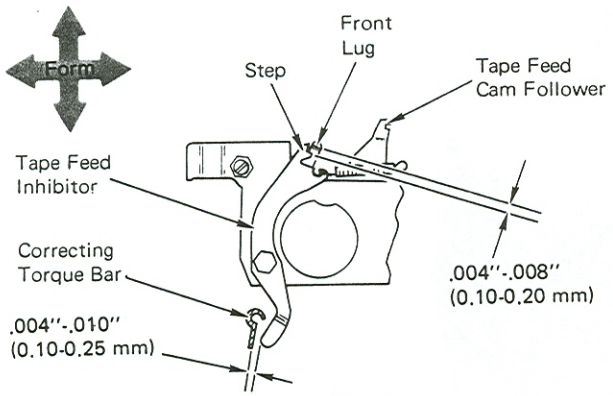

(Right Side View)

c. *Tape Feed Inhibitor (FTB)* – With the machine at rest, form the tape feed inhibitor lug front to rear for a .001"-.015" (0.03-0.38 mm) clearance between the vertical surface of the inhibitor and the front surface on the tape feed cam.

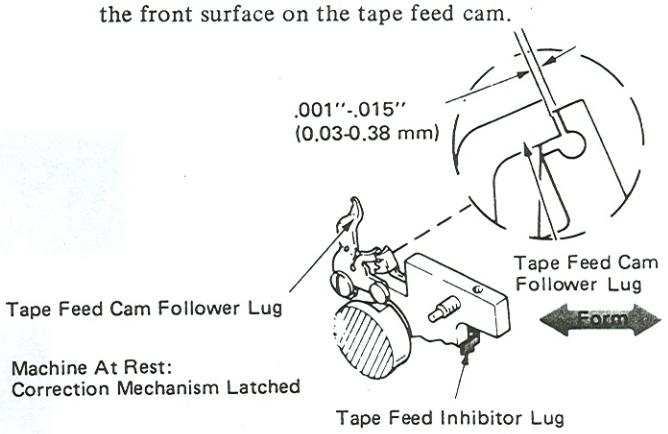

d. With the tape feed cam follower on the high point of the cam (machine at rest) and the correction mechanism latched, form the feed inhibitor left to right for a clearance of .004"-.008" (0.10-0.20 mm) between the latching surface of the inhibitor and the bottom lug on the tape feed cam follower.

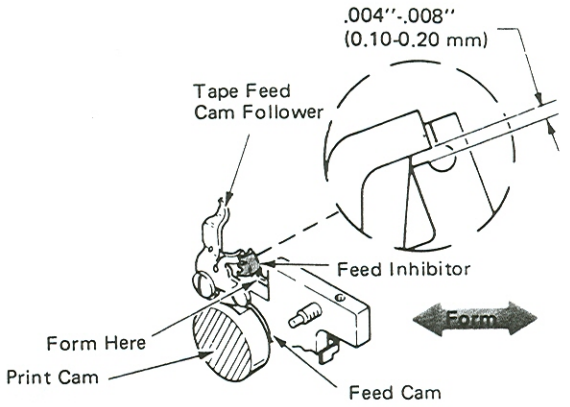

Machine At Rest, Correction Mechanism Latched

22. *Tape Feed Cam Follower, Rear Lug* – Form the rear lug on the tape feed cam follower left or right so it centers in the notch in the tape feed bellcrank.

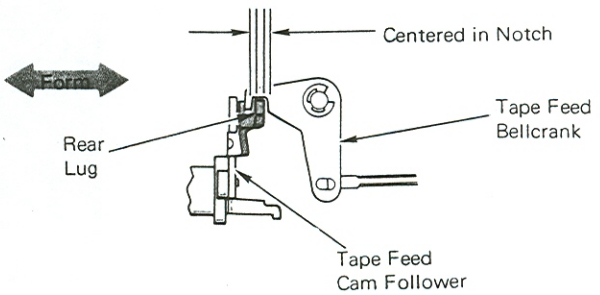

(Top View)

23. *Tape Guide* – The tape guide mounting bracket must be positioned to meet the following conditions:

a. Position the tape guide up or down so the used tape is centered on the take-up spool.

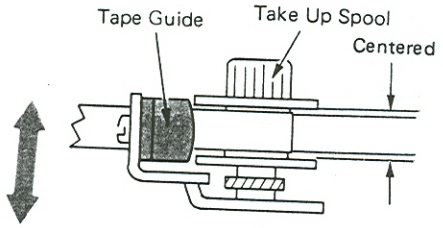

b. Position the tape guide front to rear so the tape clears the cardholder by .010"-.020" (0.25-0.51 mm).

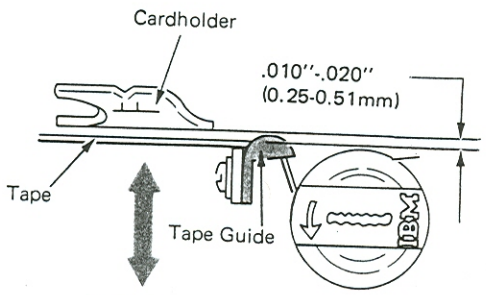

24. *Separator Wire* – . Form the separator wire to satisfy the following conditions:

CAUTION: Do not type with the tape load lever in the load position. The typehead may engage the separator wire and result in rotate tape breakage.

a. Left to right so that the wire clears the typehead by .060"-.070" (1.52-1.78 mm) when the typehead is in the print position and the load lever is in the type position.

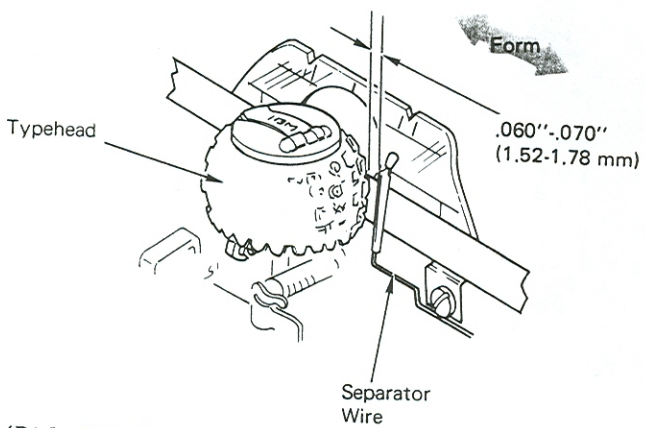

(Right Side View) (Typehead In Print Position Load Lever In Type Position)

b. With load lever in the type position, the top of the separator wire should just touch the cardholder while maintaining a minimum of .050" (1.27 mm) clearance at the bottom of the vertical part of the separator wire.

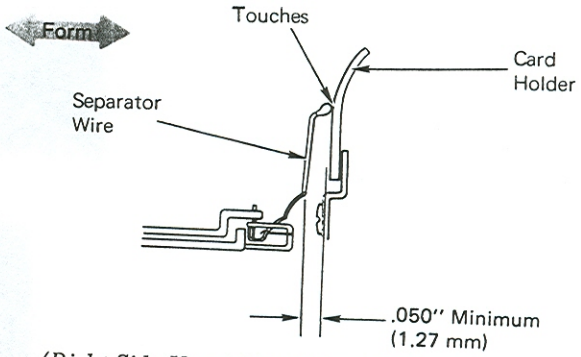

(Right Side View) (Load Lever In Type Position)

c. With the load lever in the load position, the top of the separator wire must clear the cardholder by at least .120" (3.05 mm).

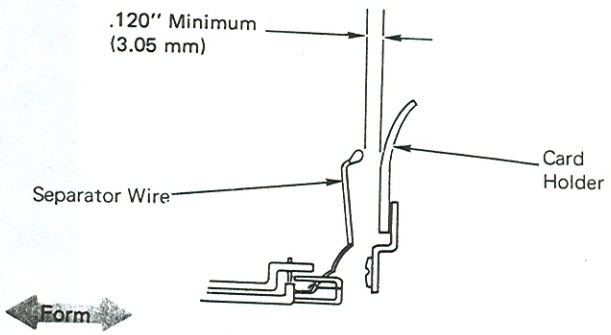

25. *Paper Guide Lug* – Form the paper guide lug front to rear so that it clears the platen by .040"-.050" (1.02-1.27 mm).

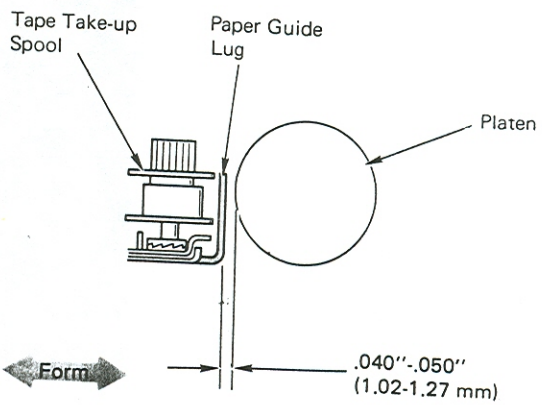

(Right Side View)

26. *High Bias Spring* – Form the vertical tip of the high bias spring in or out so that the sensing shoe clears the lugs on the tape supply spool when the mechanism is at rest.

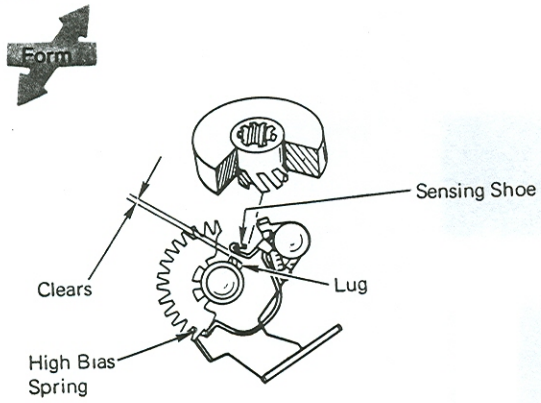

(Top View)

MARGINS AND LINELOCK OPERATIONAL THEORY

The purpose of the margin mechanism is to allow the operator to change the length of the writing line. This is done by two margin stops and a margin rack (Figure 1). The left and right margins are determined by the position of the margin stops on the margin rack. The left margin stop is used to limit carrier movement to the left.

The right margin stop first operates a warning bell which signals the operator when the carrier reaches the right margin, then locks the keyboard to prevent further typing.

Depressing the margin release keylever allows typing past the left and right margins by rotating the rack. This disengages either margin stop from the linelock bracket on the carrier.

The margin rack has teeth across its rear edge. The number of teeth per inch in the margin rack relates to the pitch of the machine.

Each margin stop has a slider assembly that engages with the teeth at the rear of the margin rack. Each margin stop has a margin set lever attached to the slider assembly. The margin set levers extend through a slot in the front case of the machine so they can be accessed by the operator. Either margin stop may be repositioned by pushing the margin set lever to the rear to disengage the slider from the rack, then, by moving the margin stop across the rack to the desired location. A line on each margin set lever serves as a pointer to indicate the position of the margin stop on the scale on the front of the case. A pointer, located on the front of the carrier, indicates the position of the carrier (Figure 1).

The left margin stop controls the left margin. When the carrier is returned by the carrier return mechanism, an extension of the left margin stop is struck by the margin stop latch pivoted on the linelock bracket attached to the carrier. This action forces the margin rack to the left to unlatch the carrier return mechanism and leaves the carrier resting at the left margin position.

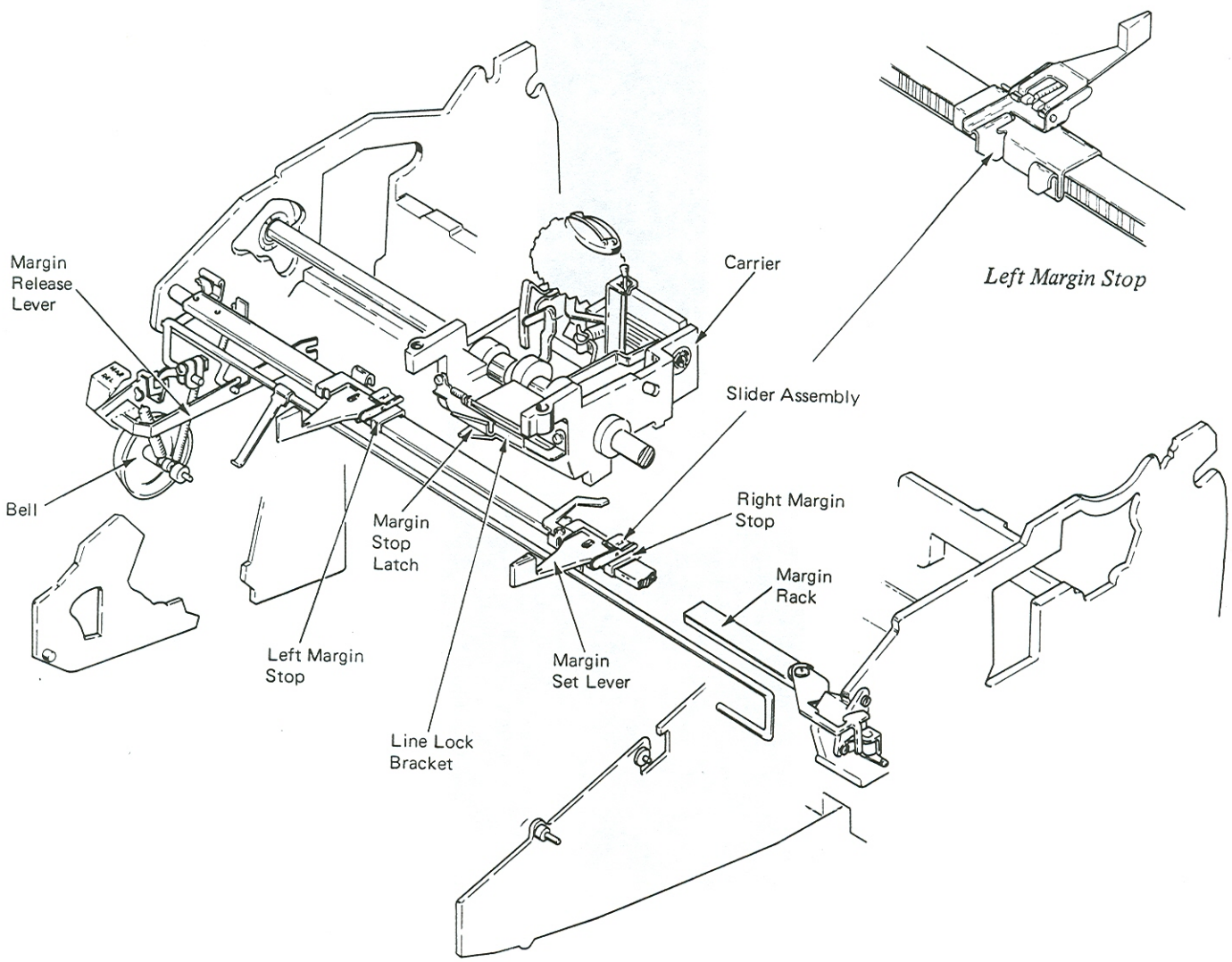

Figure 1 – Margin Control

BELLRINGER

As the carrier moves to the right-hand margin, the bellringer bellcrank slides over two vertical tabs on the linelock bracket. This causes the bellringer bellcrank to pivot around its mounting stud and cam the bellringer bail to the front of the machine. An extension of the bellringer bail forces the keyboard lockout interposer into the selector compensator tube.

As the bellringer bail is pushed to the front of the machine, the bell clapper bellcrank pivots the bell clapper away from the bell (Figure 2). Further rotation of the bail causes the bell clapper bellcrank to slip off the bell clapper allowing the bell clapper to restore to rest. The pull of the bell clapper spring and the force of the bell clapper returning to rest causes it to overthrow its rest position and strike the bell. When the bellringer bail is allowed to restore, the bell clapper bellcrank resets above the bell clapper ready for the next operation.

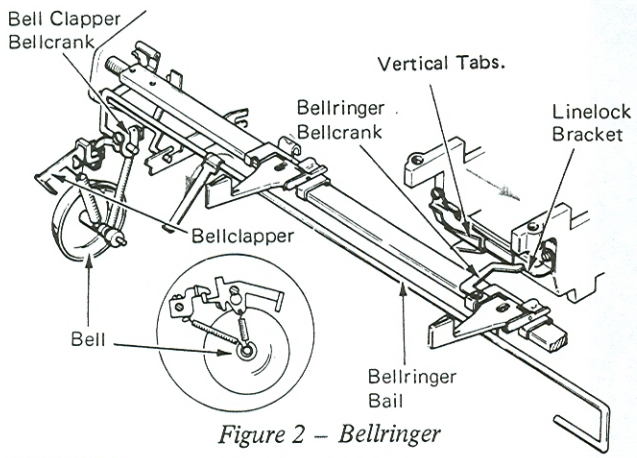

Figure 2 – Bellringer

LINELOCK

If the typist continues typing after the bell rings, the keyboard is locked after several spaces to prevent typing in the margin. The keyboard is locked by forcing a special interposer into the selector compensator tube to prevent depressing any other interposer (Figure 3).

As the carrier moves to the right-hand margin, the bellringer bellcrank moves into the path of two vertical extensions on the linelock bracket. This causes the bellringer bellcrank to pivot about its mounting stud and cam the bellringer bail to the front of the machine. An extension of the bellringer bail forces the keyboard lockout interposer down and into the selector compensator tube. This action in turn prevents any further depression of the selector keylever interposers into the compensator tube until the linelock mechanism has restored to its normal rest position.

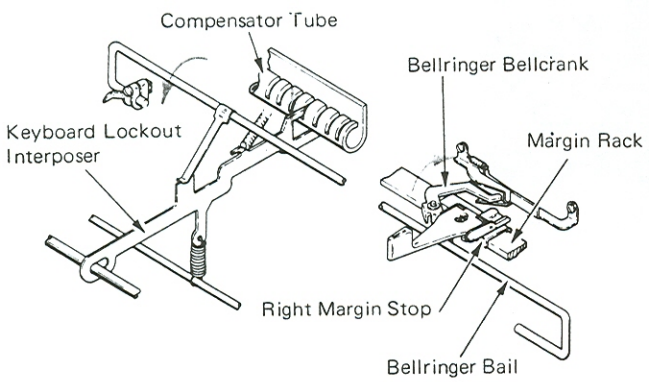

Figure 3 – Linelock Mechanism

LINELOCK MECHANISM (LEVEL 1)

The Level 1 linelock mechanism locked the keyboard in the same way as the present mechanism. However, the keyboard lock interposer used several parts. The bellringer bail operated the keyboard lock interposer which through an extension spring pulled the keyboard lock bellcrank into the compensator tube (Figure 4).

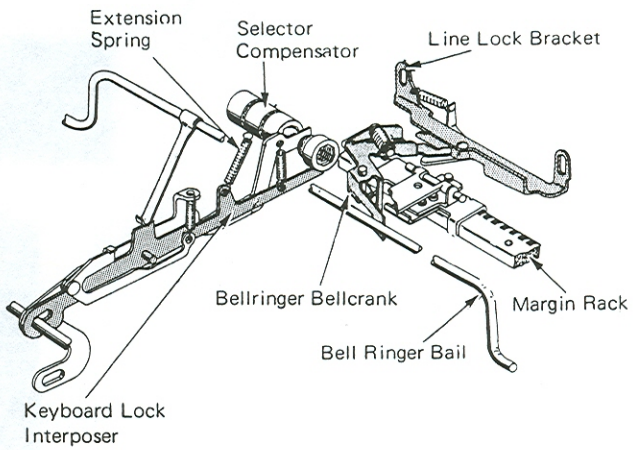

Figure 4 – Linelock Mechanism – (Level 1)

MARGIN RELEASE

The margin release mechanism allows an operator to type past the left and right margins without changing the position of the margin stops. The margin release operates by rotating the margin rack so the margin stops move upward out of the path of the margin stop latch on the linelock bracket (Figure 5).

The margin release keylever pivots at the left side of the keyboard. Depression of the margin release keylever causes the rear of the margin rack to rise. A lug on the left end of the margin rack remains in the path of the margin stop latch to unlatch the carrier return if it is operated with the margin release keylever depressed. An extension spring restores the mechanism and holds it in the rest position.

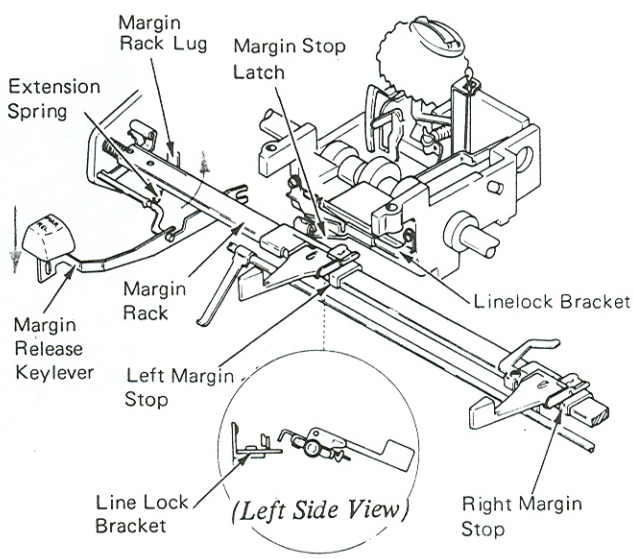

Figure 5 – Margin Release

MARGINS AND LINELOCK ADJUSTMENTS

NOTE: Dual pitch margin adjustments are slightly different. See Switch Pitch Adjustments section of this manual.

1. *Margin Rack Horizontal* – The margin rack must rest on a horizontal plane.

   a. *Level 1 – 7X1, 7X3, And 7X5* – Adjust margin release lever.

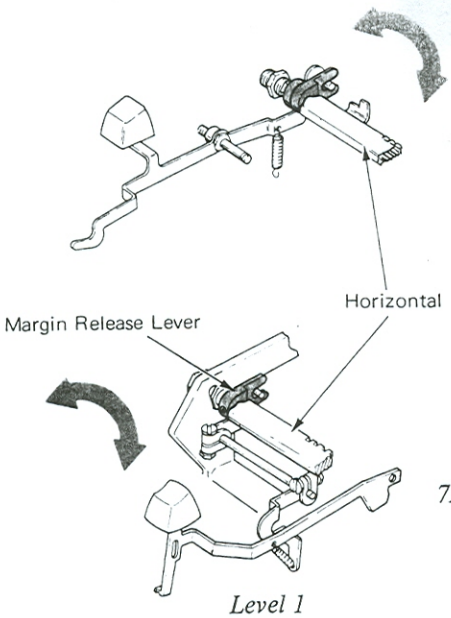

Level 1

   b. *Level 2 – 7X1 Only* – Form margin release lever stop. On 7X3 and 7X5 machines adjust the margin release lever for 1/32" (0.79 mm) engagement with the margin stop.

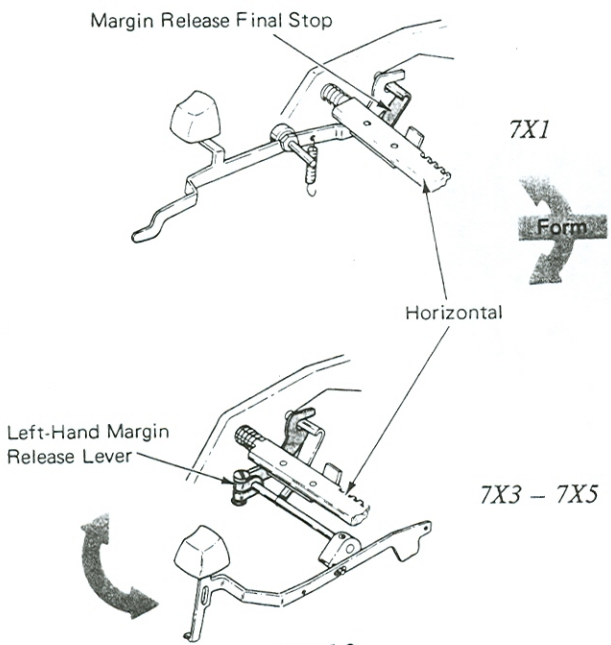

Level 2

   c. *Level 3 – 7X1, XX3, XX5* – Form margin release final stop.

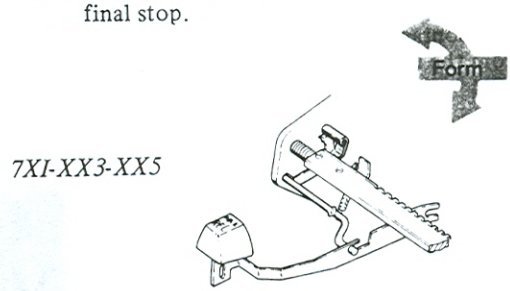

Level 3

2. *Left-Hand Final Stop* –

   a. *(NRB/S)* – Position the margin release bracket left to right on the margin rack so it will clear the margin stop by .001"-.010" (0.03-0.25 mm) when the margin stop slider is fully bottomed in the far left-hand tooth of the margin rack.

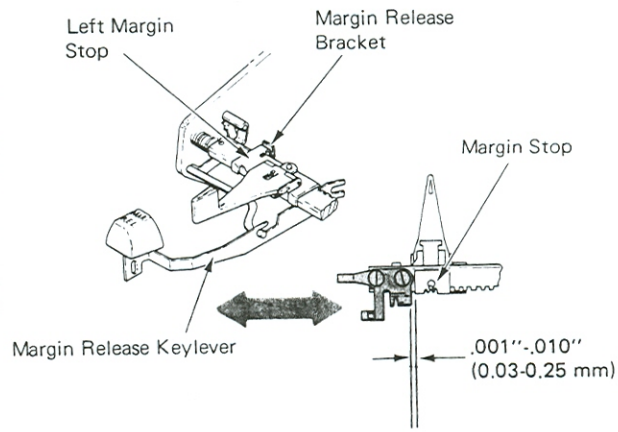

   b. *(RB/S)* – Position the margin release bracket left to right on the margin rail so it will clear the margin stop by .001"-.010" (0.03-0.25 mm) when the margin slider is fully bottomed in the far left-hand tooth of the margin rack, also position it front to rear for .001"-.004" (0.03-.010 mm) clearance between the finger on the release bracket and the slot in the margin rack.

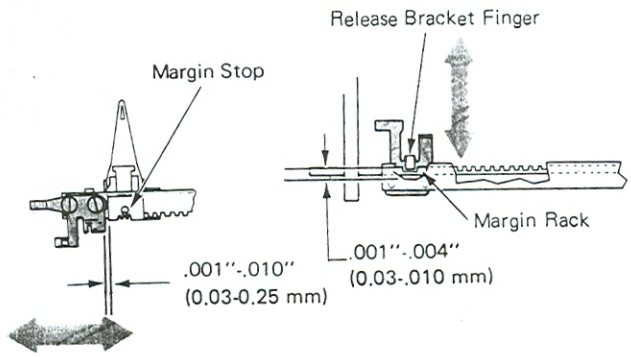

3. *Linelock Bracket* – With the carrier at the left, adjust the linelock bracket up or down so the bellringer bellcrank contacts the bracket .050"-.060" (1.27-1.52 mm) from the top.

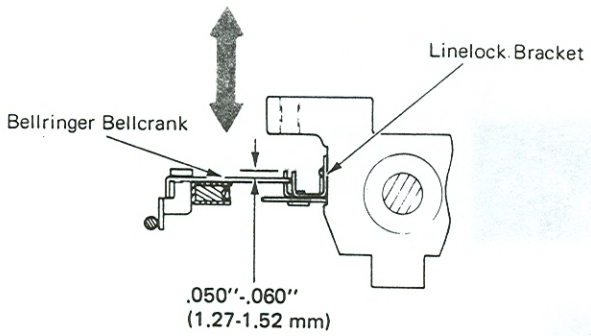

(Right Side View)

4. With the carrier at the far right, adjust the margin rack mounting mounting bracket for two conditions:

   a. *Front To Rear* – To contact the linelock bracket as observed with the carrier at the far left.

   b. *Up Or Down* – So the bellringer bellcrank contacts the linelock bracket .050"-.060" (1.27-1.52 mm) from the top.

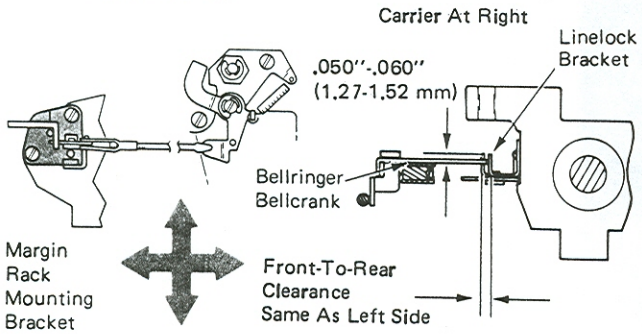

5. *Bellringer Bail Extension* – Form the bellringer bail extension up or down so the character keybuttons lock when the red pointer is directly above the right-hand margin set lever.

   CAUTION: The linelock should not bind in the space before the desired locking point.

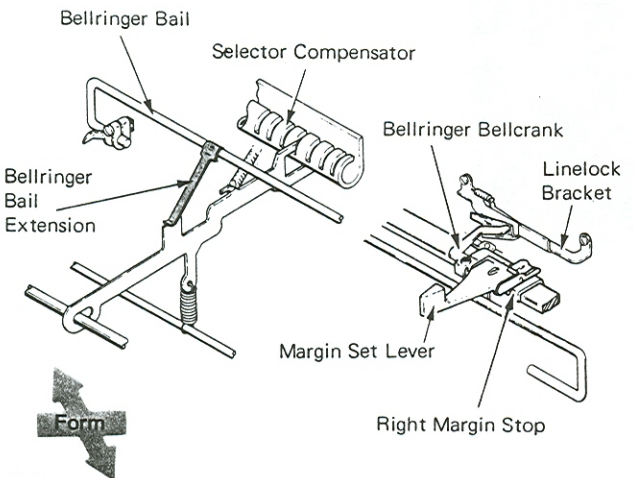

6. *Bellclapper Bellcrank* – Adjust the bellclapper bellcrank on the bellringer bail so the bellcrank clears the spring by .015"-.025" (0.38-0.64 mm).

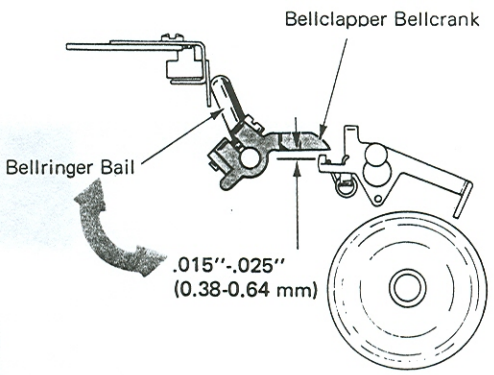

(Left Side View)

7. *Carrier Pointer* – Set the left margin stop at the first tooth of the margin rack and position the carrier at the left margin. Position the pointer for the following conditions:

   a. *(Levels 1, 2 And 3)* – Left to right so the pointer is aligned with the zero position on the margin scale.

   b. *(Levels 1 And 2)* – Up or down for equal clearance between the left margin lever and the margin scale.

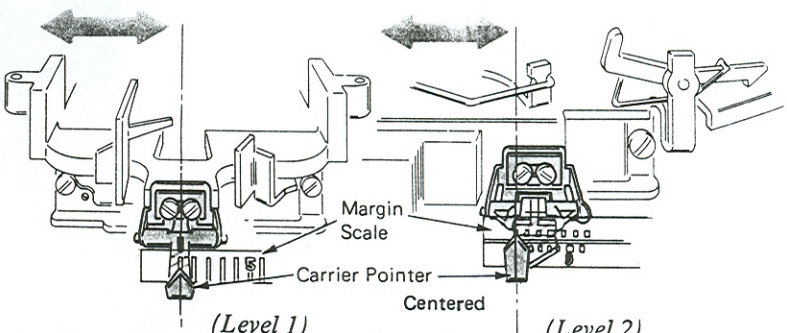

(Level 1) *(Level 2)*

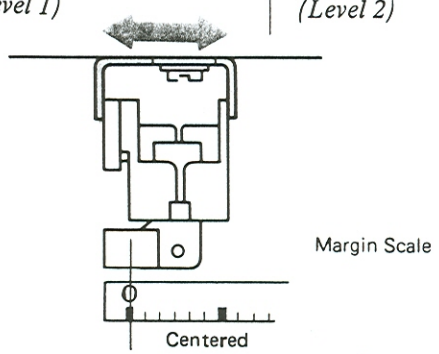

(Level 3) (Factory Sound)

c. *(Level 2)* – Front to rear to clear the margin scale and the margin set lever (margin lever compressed to rear) equally.

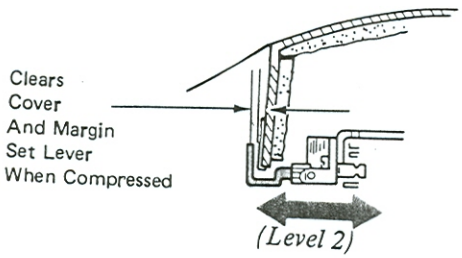

(Level 2)

d. *(Level 3, Factory Sound)* – Front to rear so the indicator mark is visible through the margin scale but does not touch the scale.

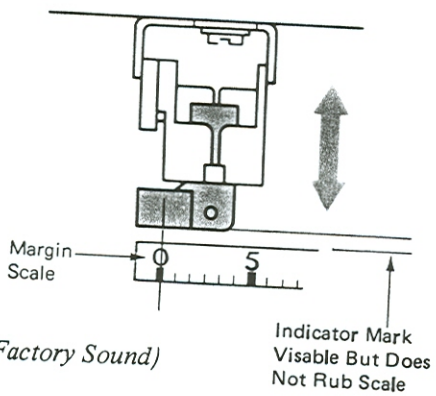

(Factory Sound)

BLANK PAGE IN MANUAL FOR ADDING NOTES

COVERS OPERATIONAL THEORY

There are three types of covers: tilt-up, console mount, and ring mount. First, we will describe the tilt-up covers, and then the differences between them and the other two types.

TILT UP COVERS

The cover assembly consists of three main sections. They are the top cover, center cover and bottom cover (Figure 1).

The center cover assembly has the paper guide attached to it. The paper guide may be removed by sliding the guide to the far right and pulling straight downward. A section of the cover material has been removed on the rear side to allow the guide to slide off easily.

The paper table is connected to the center cover assembly by two screws and two brackets. The paper table pivots on two studs mounted on the bracket to allow the platen to be removed from the machine.

A margin scale is attached to the lower extension of the top cover. The scale is marked to match the pitch of the typewriter. The margin scale is attached to the top cover by a glue that becomes active when IBM cleaning fluid is applied.

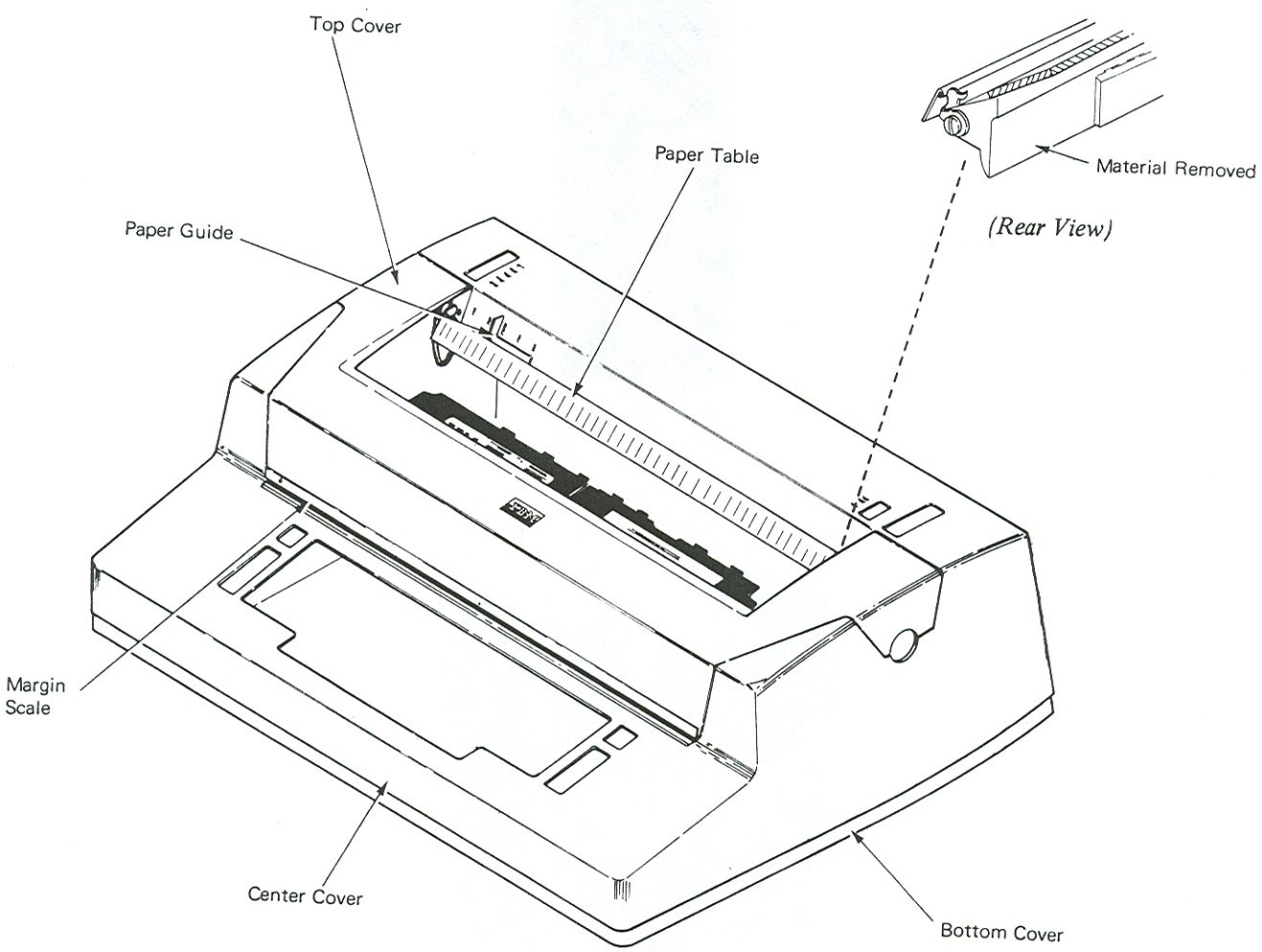

Figure 1 – Covers

TOP COVER HINGE

The top cover is attached to the center cover by a hinge at the rear. The hinge brackets are adjustable front-to-rear to allow for proper fit between the top cover and center cover. The hinge contains a detent that prevents the top cover from falling when it is in the raised position (Figure 2).

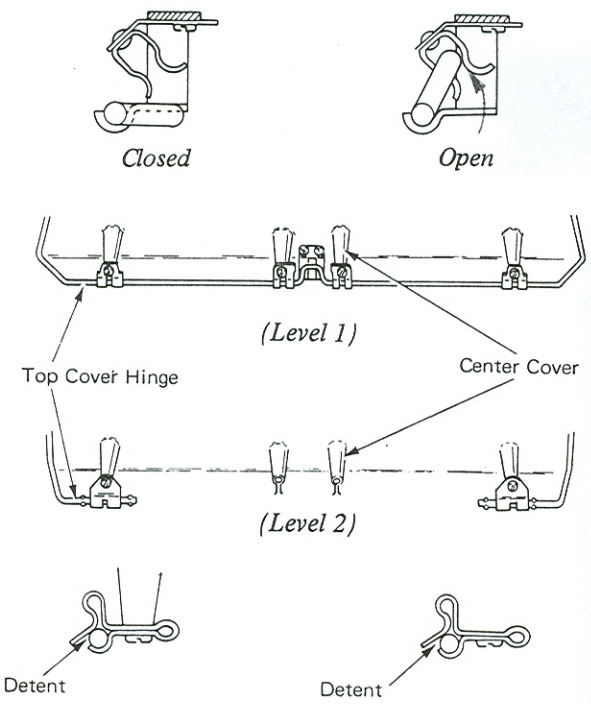

Figure 2 – Top Cover Hinge (Bottom View)

TOP COVER SPRING CLIP

Near the front of the top cover are two spring clips (Figure 3). When the cover is in its lowered position, the spring clips latch the cover in place to prevent vibration.

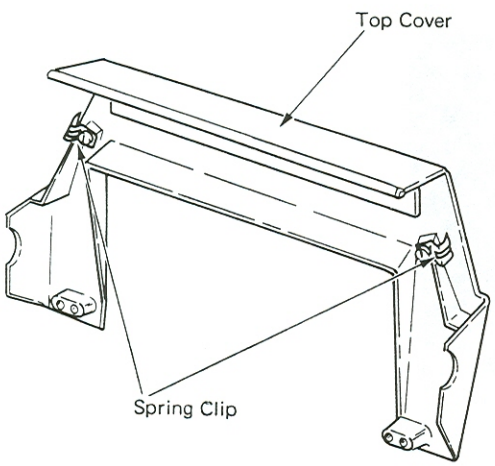

Figure 3 – Top Cover Spring Clip (Cover Raised)

CENTER AND BOTTOM COVERS

There are three basic levels of center and bottom covers used on the "Selectric" typewriter. The Level 3 cover has been used since 1965 and is the easiest to identify. This cover has a latch extending vertically just inside the right and left side of the center cover (Figure 4). The absence of assembly attached to the top cover. Within the housing are the 10 and which are similar to each other.

The cover latches are attached to the center cover by a bracket and a mounting screw. With the lever to the rear, the lower part of the cover latch fits below the latching surface attached to the bottom cover. Pulling the lever toward the front of the machine will cause the lower part of the latch to pivot to the rear, out from below the latching surface. The top and center cover may now be removed from the bottom cover.

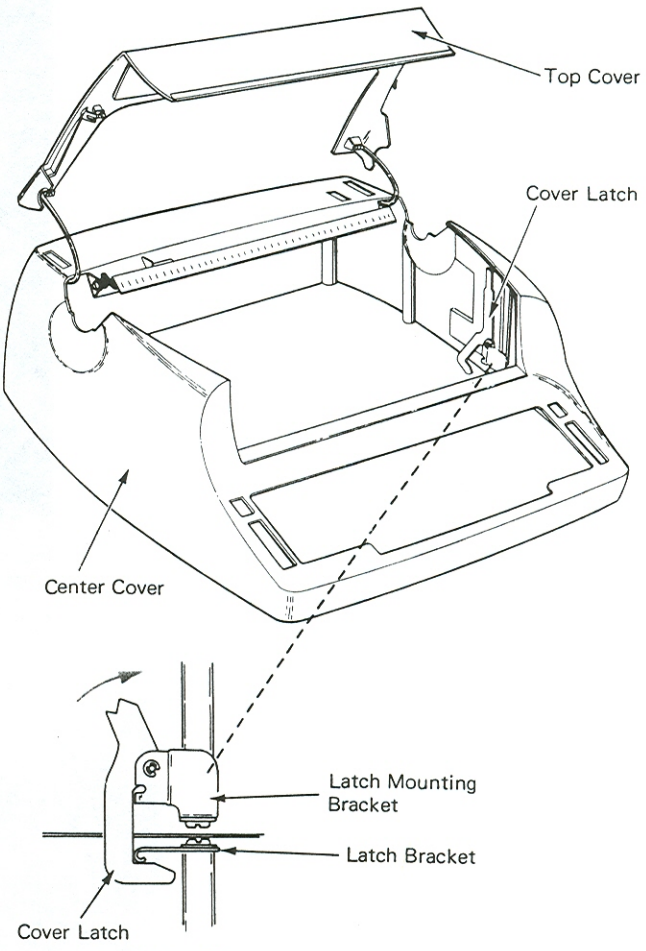

Figure 4 – Center Cover Latches (Level 3)

The Level 3 bottom cover has the vent positioned in a slot at the rear. The rubber mounting to support the typewriter inside the case is also contained within the bottom cover (Figure 5).

The Level 1 and Level 2 center cover assemblies have the vent grille mounted in the rear by a plate. Slotted holes in the plate allow the vent to be removed without removing the plate from the center cover. The Level 1 bottom case is held in place by a screw at the center rear.

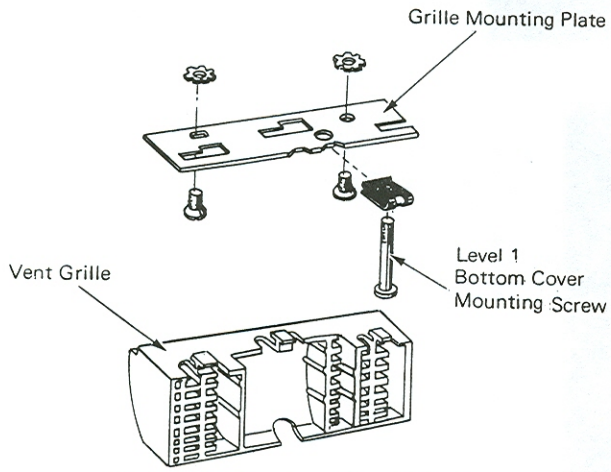

Vent Grille Mounting (Level 1 & 2)

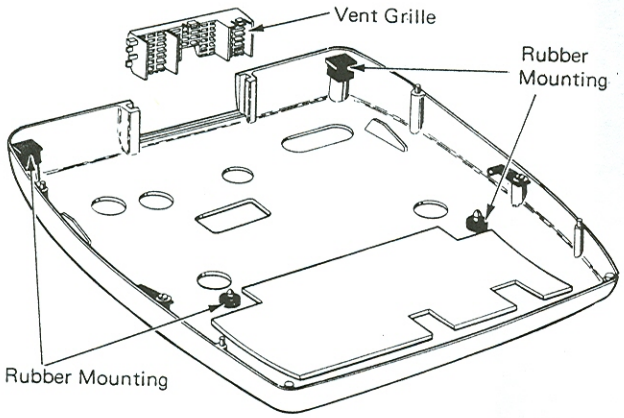

Figure 5 – Bottom Cover Rubber Mounting (Level 3)

The Level 2 bottom case is held in place by friction fit and does not use the rear mounting screw (Figure 6).

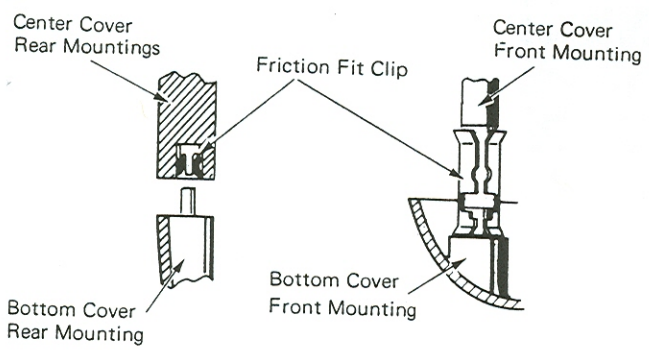

Figure 6 – Bottom Cover Mounting (Level 2)

MOUNTING BRACKETS

The machine mounting brackets are attached to the machine frame and are adjusted vertically. A latch lever (Figure 7) locks the machine to the rubber mounting foot on the left side of the machine (Figure 5).

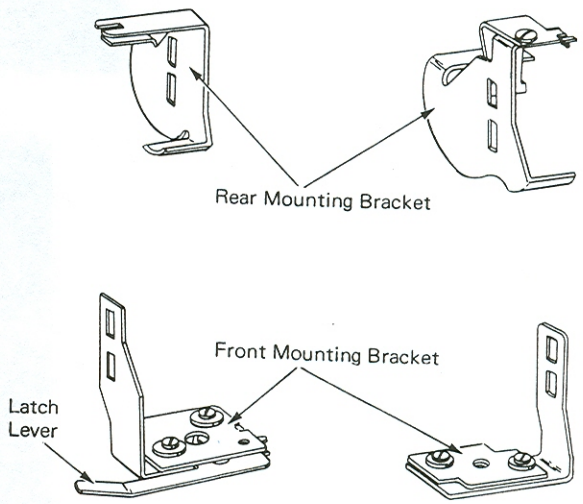

Figure 7 – Frame Mounting Brackets (Level 3)

The Level 1 and Level 2 cover assemblies are mounted to the machine by brackets attached to the center cover assembly by mounting plates. The machine is supported on rubber bushings attached to the mounting plates (Figure 8).

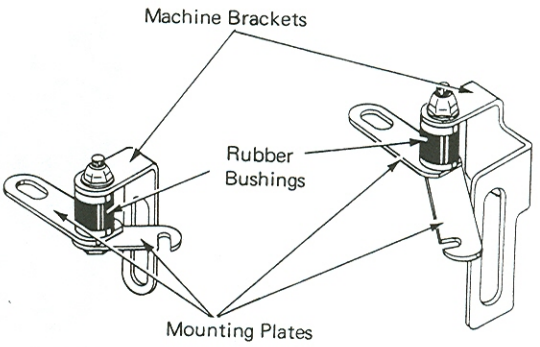

Figure 8 – Center Cover Frame Brackets (Level 1 & 2)

DUST SHIELDS

There are two levels of dust shields located just below the carrier (Figure 9). The Level 2 dust shields are plastic and fit into the power frame at the rear and into three mounting brackets at the front. The Level 1 dust shields are metal and are held in place by three screws and a nut.

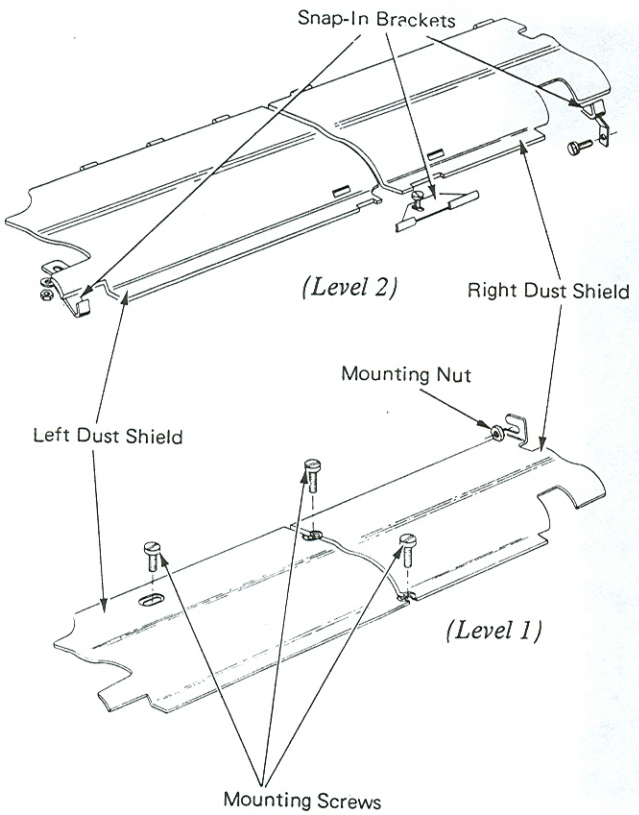

Figure 9 – Dust Shields

COVERS ADJUSTMENTS

1. *Top Cover Hinge* – The top cover hinge should be adjusted so the bend of the top cover matches the bend of the center cover. Position the hinge mounting plate front to rear to get this condition.

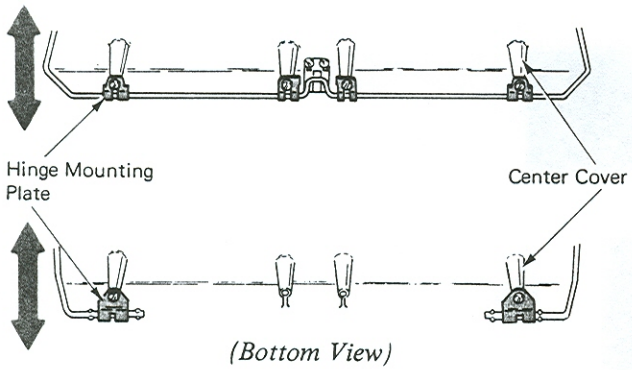

(Bottom View)

2. *Top Cover Latches* – Form the Level 1 latches front to rear and adjust the Level 2 latches left to right so the top cover is latched tightly in the closed position.

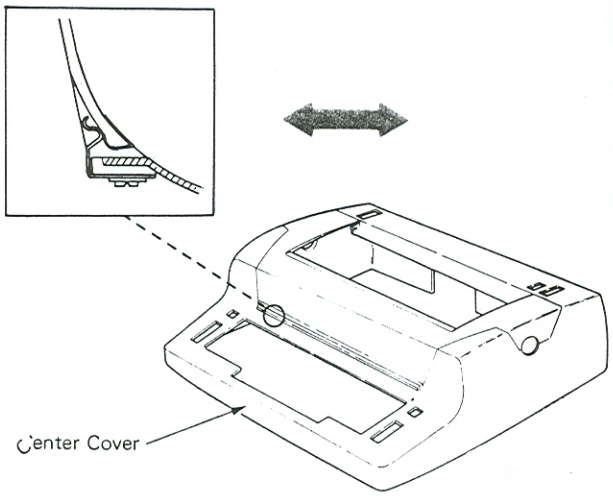

(Level 1)

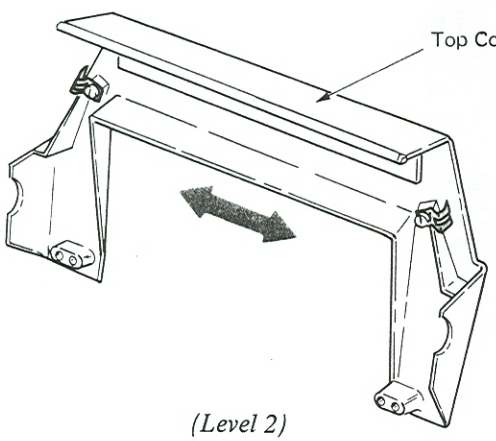

(Level 2)
(Raised Position)

3. *Hinge Spring (Level 1 Only)* – The hinge spring should be positioned front to rear so the top cover hinge is held in the open position.

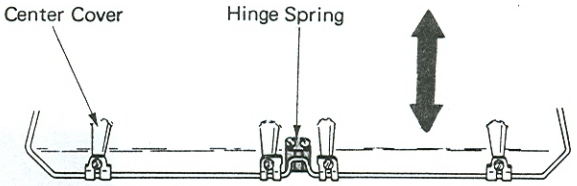

(Bottom View)

4. *Cover Mounts* – Adjust the cover mounting brackets so the machine will be positioned in the covers and the following requirements are met:

   a. All of the openings for the keybuttons will have equal clearance on each side.

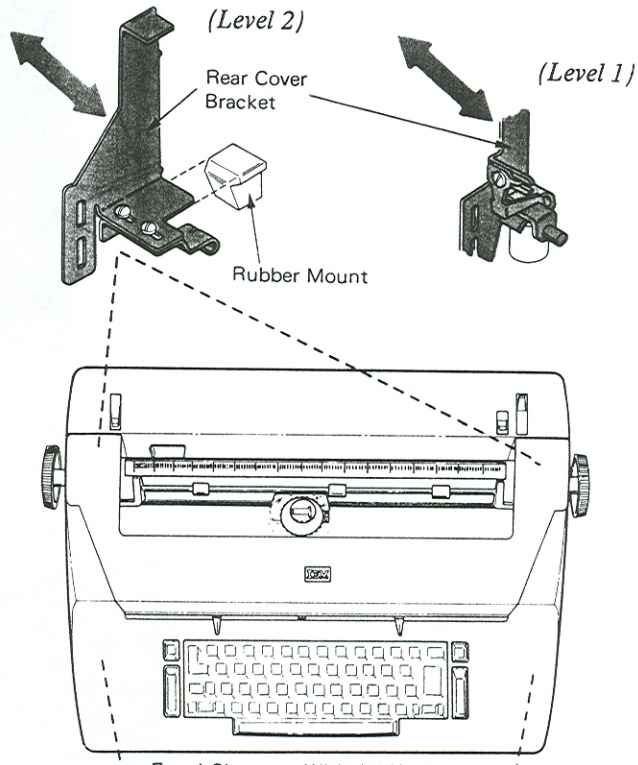

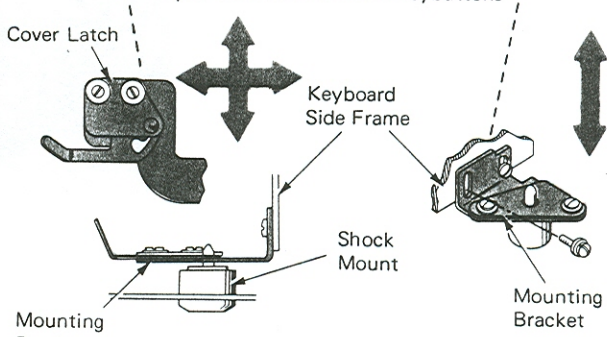

(Level 2)
(Level 2)

b. The platen will clear the covers with the copy lever operated to the far front and rear position.

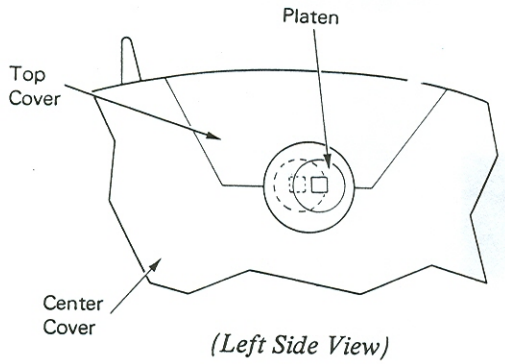

(Left Side View)

c. The clearance between the paper guide and the deflector will be .020"-.040" (0.51-1.02 mm).

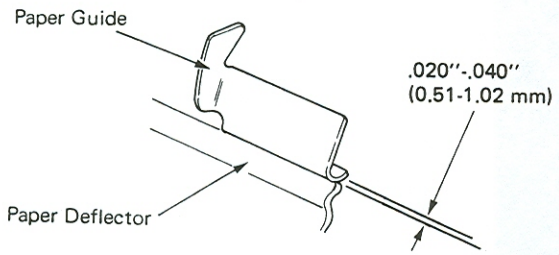

d. The top of the spacebar will be 1 3/8" (34.9 mm) above the top edge of the bottom cover.

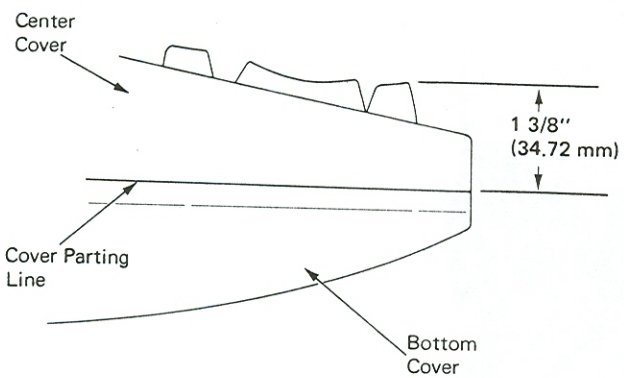

CARDHOLDING PLATEN OPERATIONAL THEORY

The purpose of the cardholding platen is to keep cards from slipping while being typed on. The blade of the cardholding platen has a groove under both sides to allow a card to be held by either the top or the bottom. A card stop mounted on the blade can be moved to help in positioning the card laterally in the card slot (Figure 1).

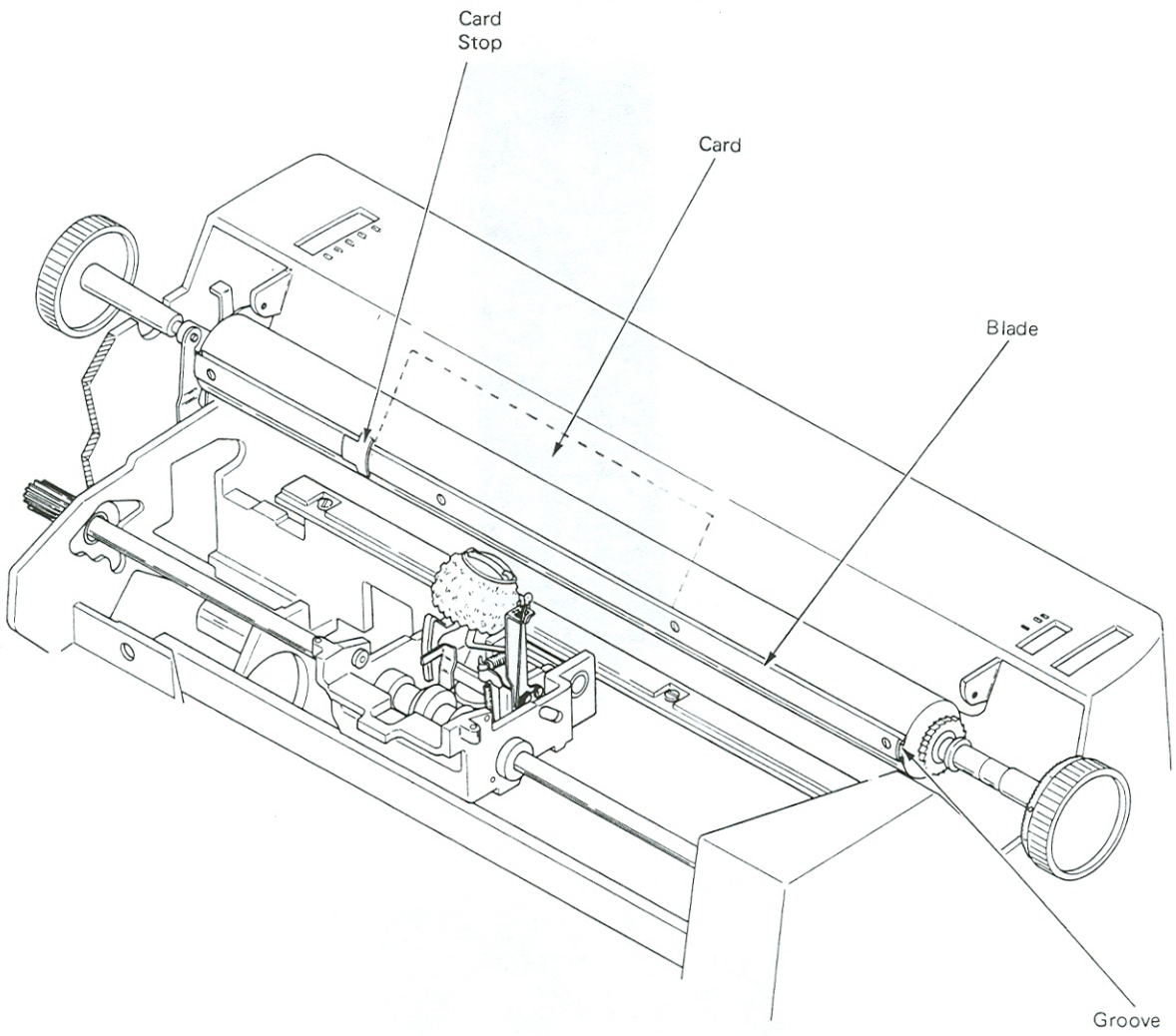

Figure 1 – Cardholding Platen

There Are No Adjustments On A Cardholding Platen.

BLANK PAGE IN MANUAL FOR ADDING NOTES

DEAD KEY DISCONNECT MECHANISM THEORY

The purpose of the dead key disconnect is to inhibit the dead key mechanism and allow normal escapement for dead key positions. This is done with a cable which pivots the dead key cable away from the finger on the dead key bail. The disconnect cable is controlled from the keyboard by a wheel mounted next to the tab set and clear keybutton. With the control wheel rotated away from the operator, the dead key mechanism operates normally. With the control wheel rotated toward the operator, the dead key mechanism is disconnected and escapement occurs for dead key positions (Figure 1).

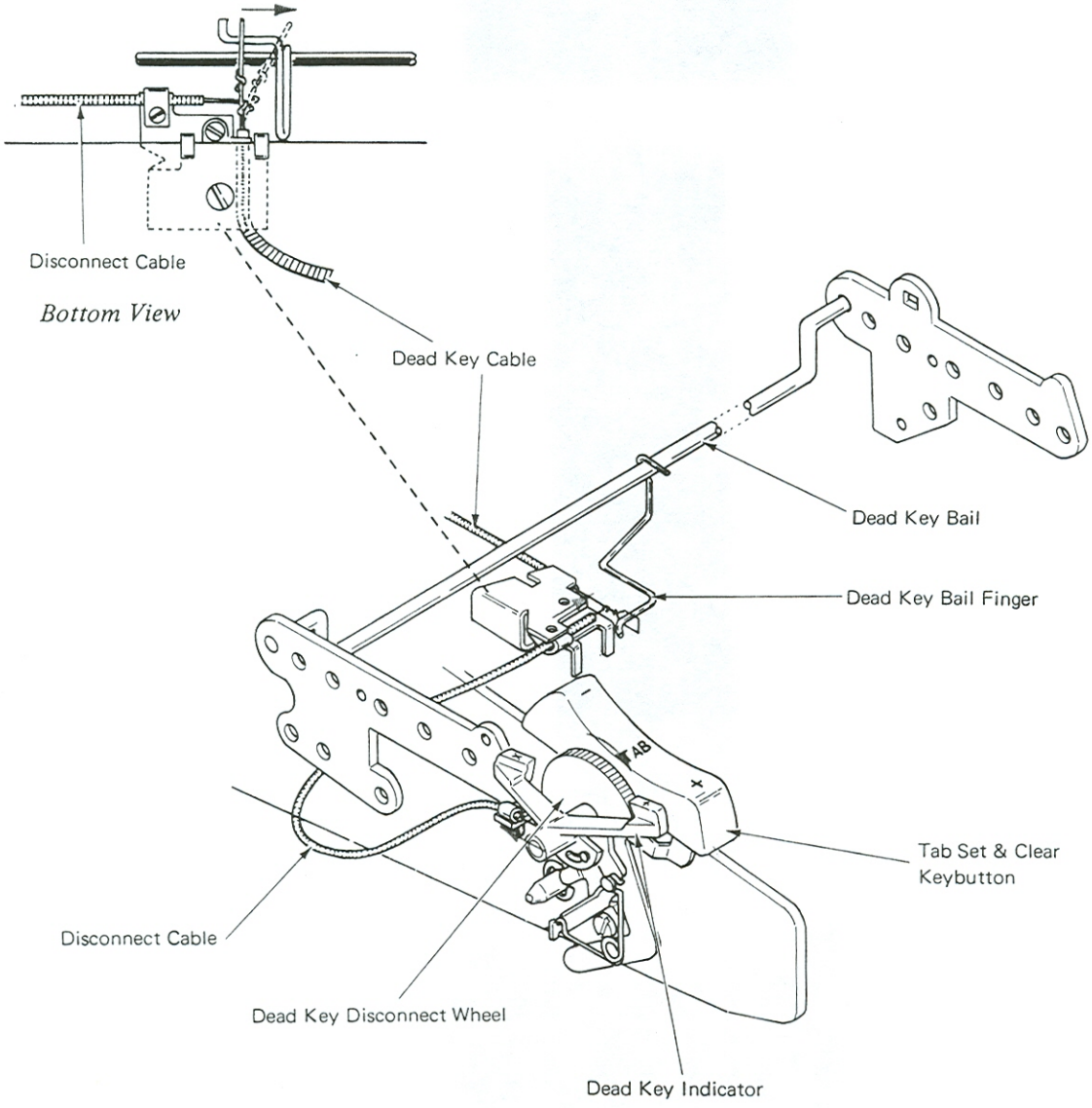

Figure 1 – Dead Key Disconnect Mechanism

DEAD KEY DISCONNECT ADJUSTMENTS

1. *Indicator* – Adjust the indicator to match the angle of the tab set and clear button.

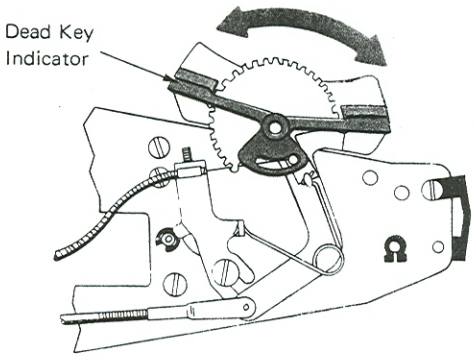

Left Side View

2. *Front Cable Clamp* – Adjust the cable cover so that the first two loops of the cover extend past the edge of the clamp.

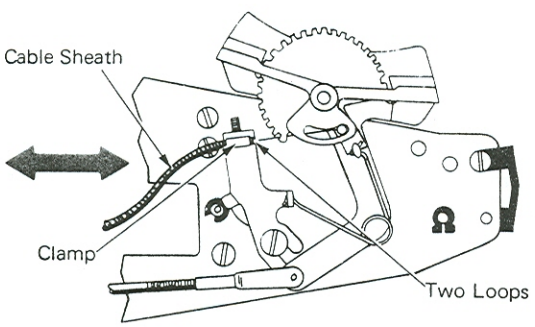

Left Side View

3. *Rear Cable Clamp* – With the control wheel rotated away from the operator, adjust the cable cover left to right so that the dead key cable is centered on the dead key bail finger. With the control cable rotated toward the operator, the disconnect cable should push the dead key cable away from the working surface of the selector bail finger.

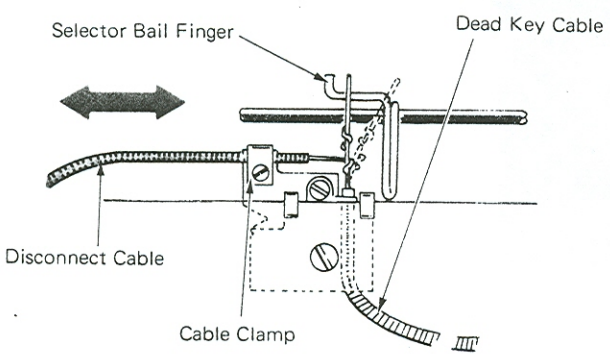

(Bottom View)

DEAD KEY OPERATIONAL THEORY

The purpose of the dead key mechanism is to inhibit escapement on certain keyboard positions. This mechanism is used with several foreign keyboards. We will refer to the Trilingual keyboard for discussion purposes (Figure 1).

On the Trilingual keyboard the characters in positions 41 and 42 are accent marks used with the vowels in certain words to indicate pronunciation. These are "dead key"d characters and when they are typed, the carrier does not escape. The next character typed will appear directly below the accent mark.

In order to inhibit escapement a 7th selection bail is installed in the keyboard. With the typewriter on its back, the dead key bail is the bottom bail. The interposer for a dead key position has an extra lug to operate this bail. Attached to the bail is a finger over which the eye of a cable is located. This cable is very similar to the cable used to control impression. The cover of the cable is held tight by two clamps, one for each end, mounted to the power frame. The rear end of the cable is attached to a hole in the bottom of the escapement trigger (Figure 2).



Figure 1 – 74 Trilingual Keyboard

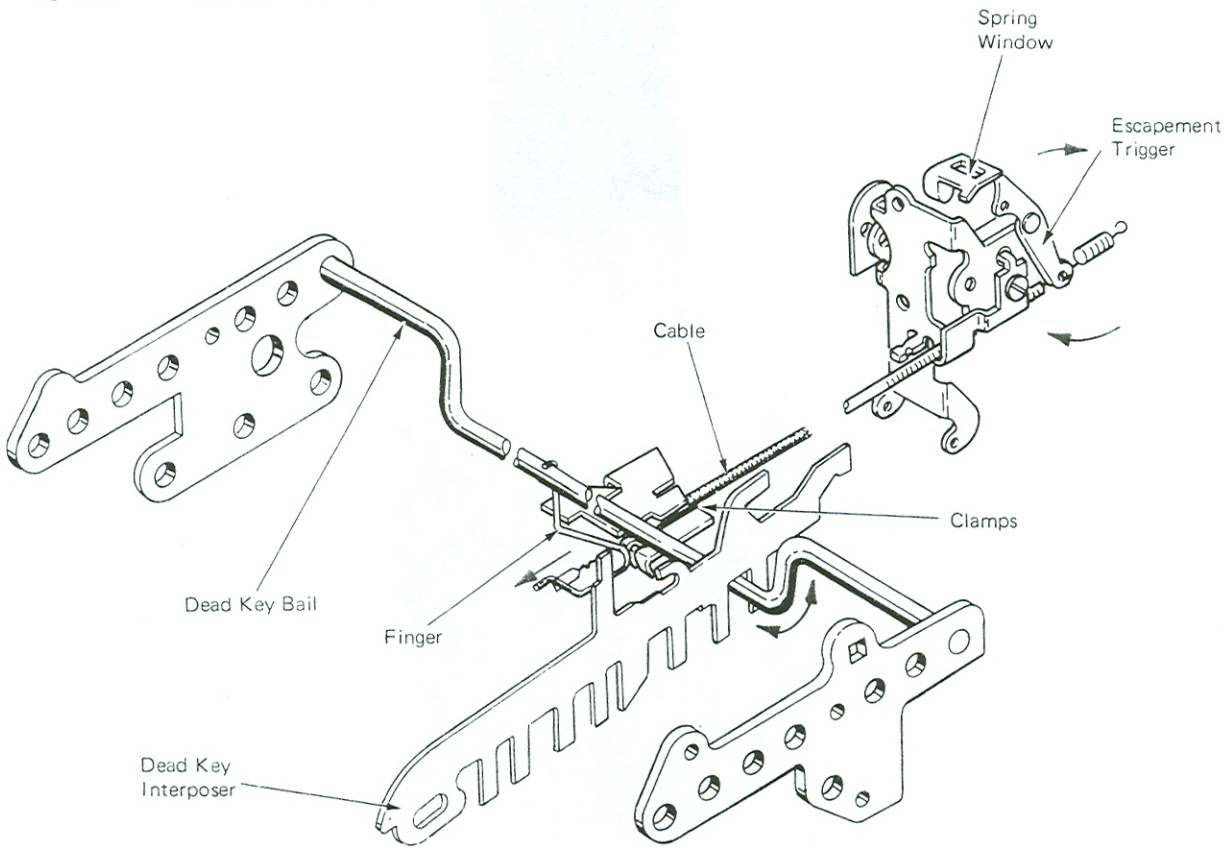

Figure 2 – Dead Key Mechanism

When an interposer in a dead key position is driven forward by the filter shaft, the rear lug on the interposer pulls the dead key bail forward. The finger on the dead key bail pulls the dead key cable which pivots the escapement trigger away from the lug on the escapement torque bar. A spring window which normally rests on the top of the escapement trigger is allowed to move in front of the escapement trigger as the trigger pivots. This prevents the trigger from restoring over the torque bar lug until the end of the print cycle. When the escapement mechanism operates, the trigger is away from the torque bar lug, which prevents escapement (Figure 3).

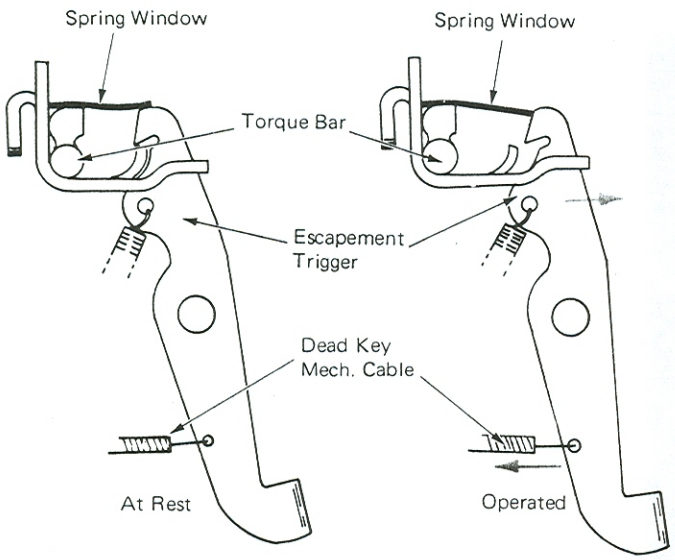

Figure 3–Spring Window Operation

As the escapement trigger is pulled down, it moves out of contact with the spring window and is pulled forward by a spring. As the escapement mechanism restores, the top of the trigger contacts the bottom of the spring window, pushes it up and is allowed to restore in its normal position over the escapement torque bar lug.

DEAD KEY ADJUSTMENTS

1. *Trigger Link* – With the mode actuating bellcrank released, adjust the trigger link clevis so that the working surface of the trigger clears the escapement torque bar by .020"-.040" (0.51-1.02 mm).

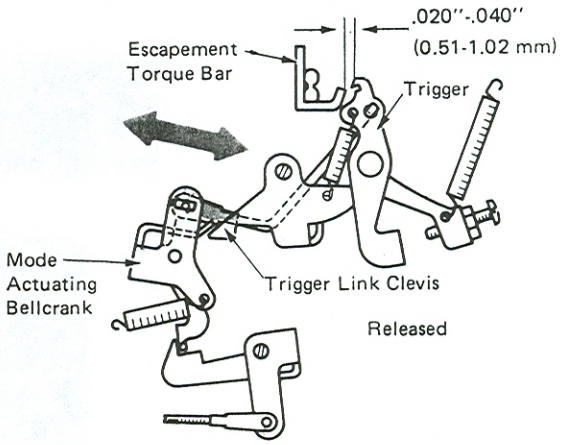

2. *Rear Cable Clamp (Level 1)* – Adjust the cable cover under the clamp for .485"-.565" (12.32-14.35 mm) movement of the cable when a dead key position is operated.

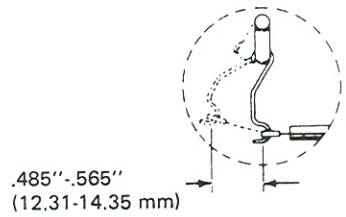

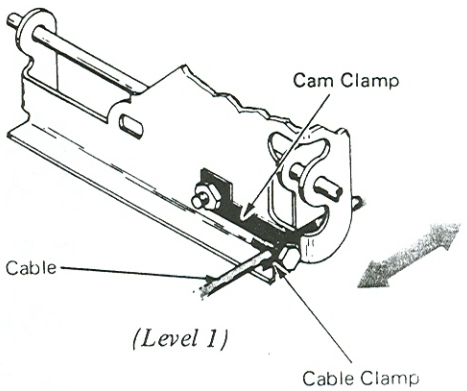

(Level 1)

Level 2 – Adjust cable sheath to be flush with rear edge of rear cable clamp to get .485"-.565" (12.32-14.35 mm) movement of cable when a dead key position is operated.

3. *Front Cable Clamp* – Adjust the cable cover under the clamp so that the escapement trigger is pulled .030"-.060" (0.76-1.52 mm) past the spring window.

NOTE: With the dead key mechanism installed on a correcting "Selectric," be sure to maintain .005"-.020" (0.13-0.51 mm) clearance between the working surface of the trigger and the escapement torque bar lug with the mode actuating bellcrank released.

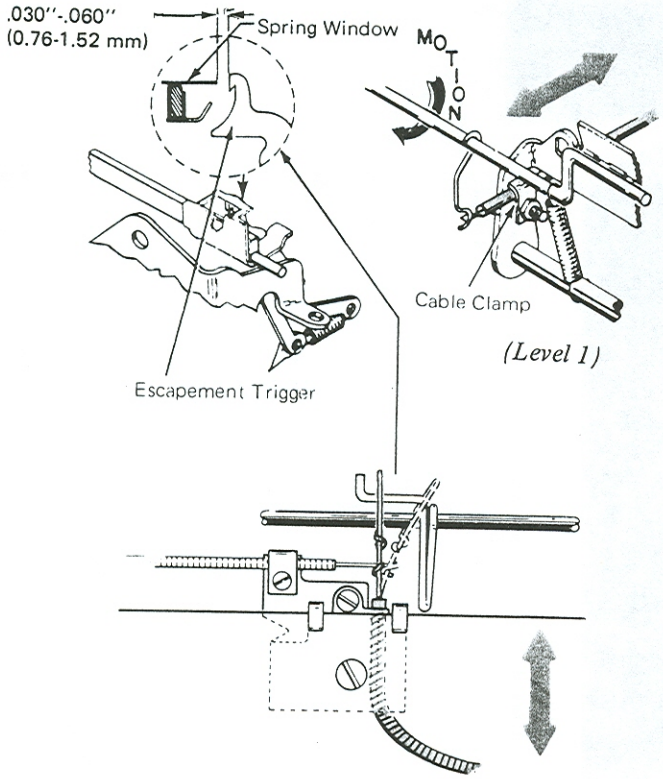

(Level 1)

(Level 2)

BLANK PAGE IN MANUAL FOR ADDING NOTES

DOUBLE INDEXING OPERATIONAL THEORY

The purpose of the double indexing device is to provide a second index operation for each carrier return operation.

Double indexing is performed in the following way. When the carrier return button is depressed, a normal indexing and carrier return operation occurs. Motion from the carrier return shoe bellcrank through the interlock shaft rotates the index trip shaft. The tripper, mounted on the trip shaft, rotates downward, pulling the index keylever pawl down. The index keylever pawl releases the index interposer, causing a second index operation.

The double indexing mechanism can be locked out so that normal linespacing will occur. To lock out the double indexing operation, the mode switch, mounted above the ON/OFF switch lever, is rotated toward the front of the machine. The mode lever, through a link and locator, loads the tripper and tripper shaft to the left so the tripper rotates between the index and carrier return keylever pawls when operated. When the tripper rotates between the index and carrier keylever pawls, normal linespacing will occur.

This mechanism provides 2, 3, 4 and 6 lines per inch with standard 54-tooth indexing, or 2, 4, and 8 lines per inch with standard 36-tooth indexing for printing and publishing customers with OCR applications.

This double index can be installed on all U.S. "Selectric," "Selectric" II, and Correcting "Selectric" typewriters, with the exception of machines equipped with the following:

1. Manual velocity control
2. Shift sensing
3. Space to print interlock
4. AVC inhibitor

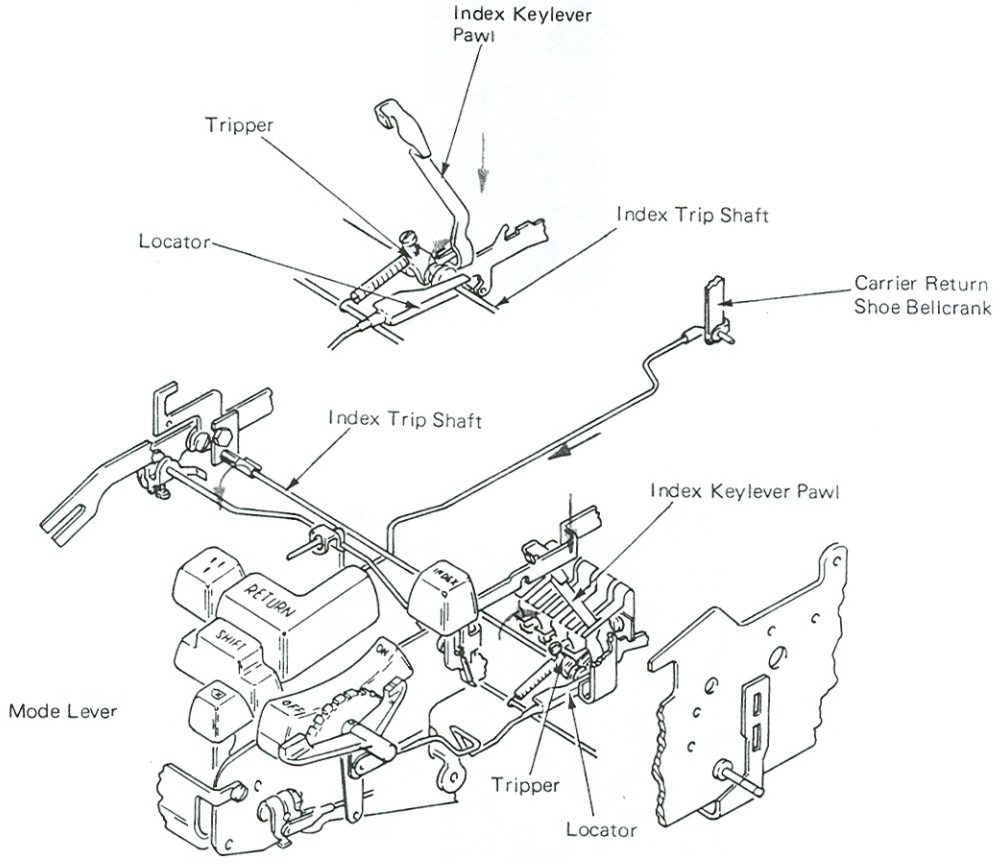

Figure 1 – Double Indexing Device

DOUBLE INDEXING ADJUSTMENTS

NOTE: All index adjustments must be correct.

1. Adjust trip shaft clip left to right for slight pressure on the spring while in the double index mode.

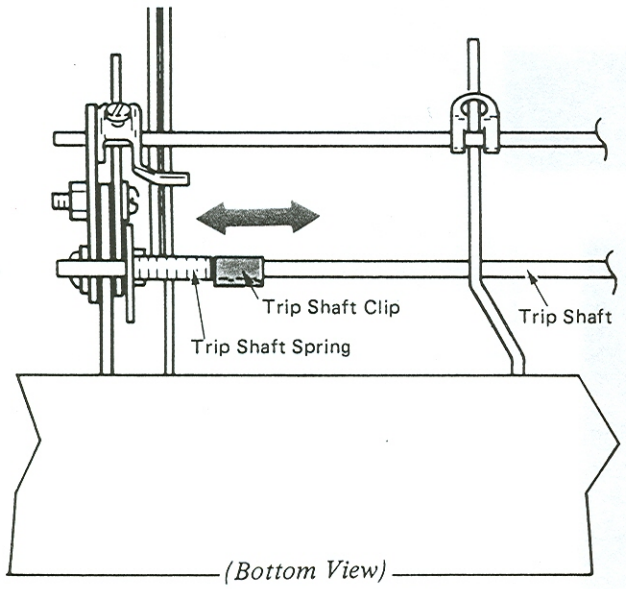

(Bottom View)

2. Form the link in the "U" part so the link has .001"-.020" (0.03-0.51 mm) between the link and the shift interlock bail.

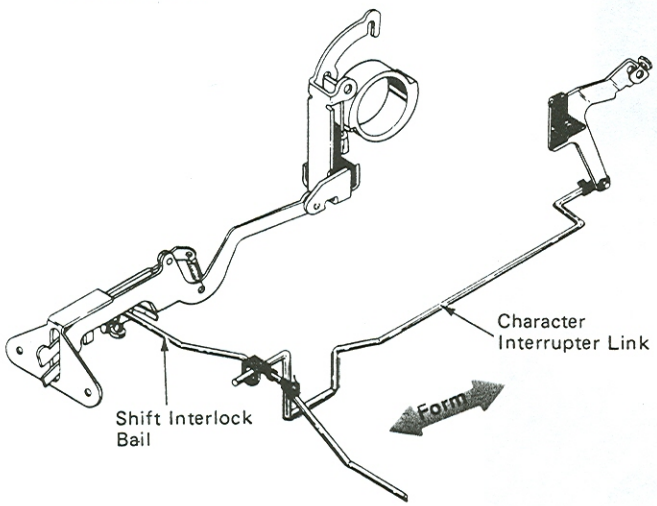

3. *Tripper Position* –

   a. Adjust tripper left to right for minimum clearance between the spacer and locator.

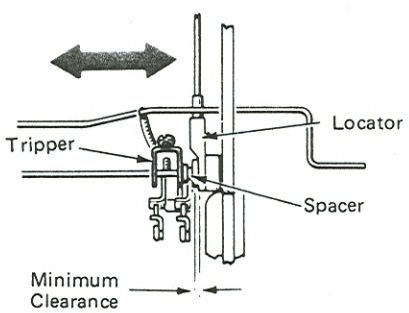

(Bottom View)

   b. Adjust tripper for .020"-.035" (0.51-0.89 mm) clearance to the index keylever pawl.

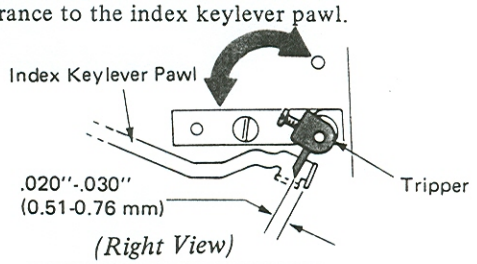

(Right View)

4. *Locator Bracket* – Form the locator bracket left or right for positive disengagement of the tripper and index keylever pawl, with the mode lever in the normal index mode. (Keylever pawl guides may be moved apart slightly to increase clearance to help get positive disengagement.)

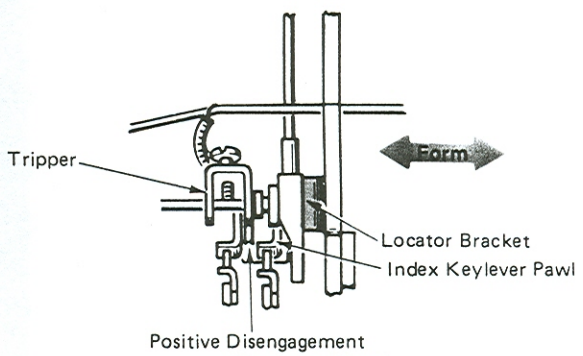

(Bottom View)

5. *Locator Clevis* – Adjust the locator clevis front to rear for positive engagement of the tripper and index keylever pawl, with the mode lever in the double index mode.

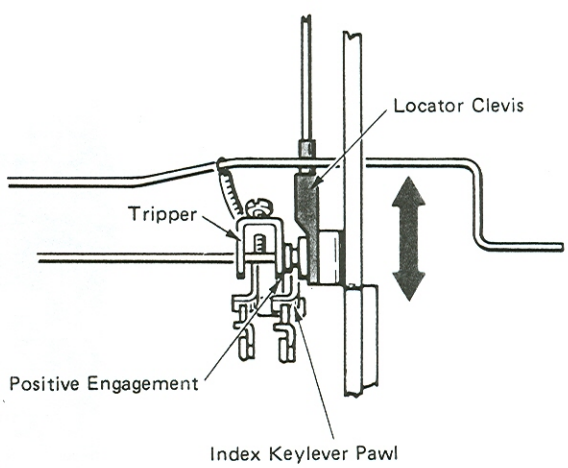

(Bottom View)

6. *Carrier Return Interposer Adjusting Screw* – Adjust the carrier return adjusting screw for a latch clearance of .005"-.015" (0.13-0.38 mm). If experiencing extra C/R cycles, increase this adjustment to .030" (0.76 mm).

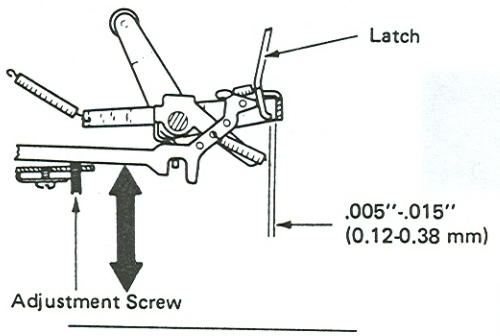

7. *Double Index Bellcrank (Level 1 Only)* – Adjust the bellcrank bracket so the motion of the carrier return latch releases the index keylever without restraining the motion of the carrier return latch when the operational shaft is hand cycled.

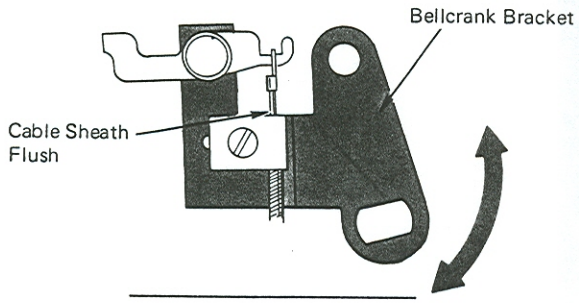

8. *Side Frame Clamp (Level 1 Only)* – Adjust the cable cover under the side frame clamp so the index keylever motion is not limited when depressed.

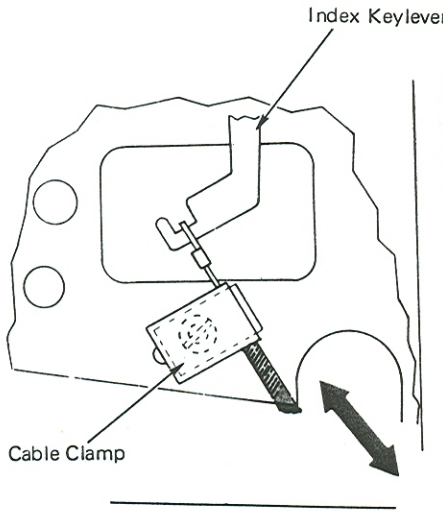

BLANK PAGE IN MANUAL FOR ADDING NOTES

EXTERNAL RIBBON CONTROL OPERATIONAL THEORY

The external ribbon control is designed for customers with applications that require a lot of changes from black to red ribbon by allowing the operator to select stencil, black or red ribbon positions without lifting the cover.

The control lever is located on the left side of the carrier. The operation is similar to the impression selector lever (Figure 1).

The ribbon control lever is mounted with the ribbon control bellcrank inside the left-hand carrier casting. A wire link connects the control lever and the control bellcrank. When the control lever is moved front to rear, the control bellcrank pivots on its mounting stud. The control bellcrank causes the lift control lever to pivot. Connected to the lift control lever is the lift control link. The lift control link for the external ribbon control functions the same as the lift control link on the standard fabric ribbon mechanism.

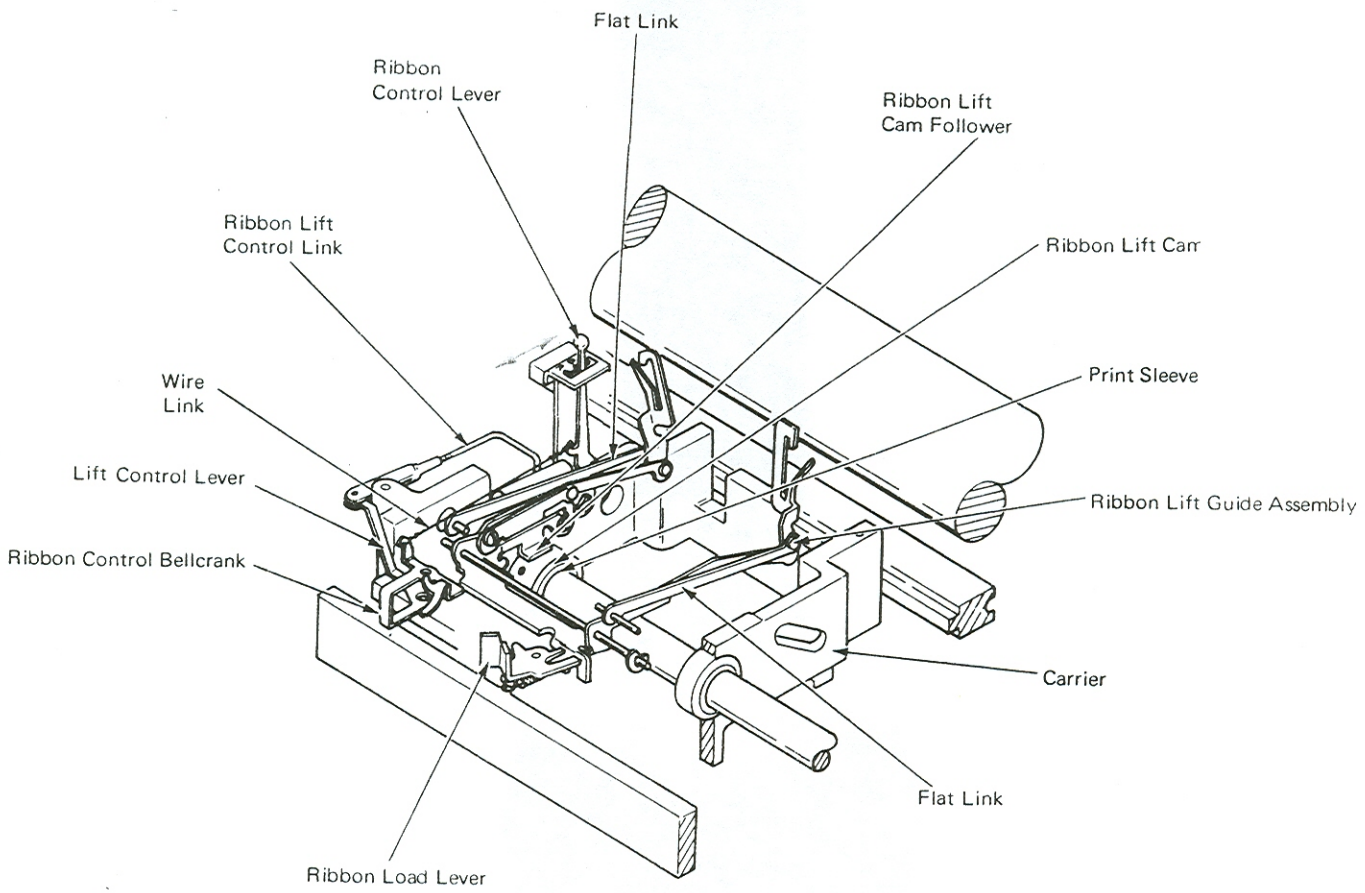

Figure 1 – External Ribbon Control Mechanism

EXTERNAL RIBBON CONTROL ADJUSTMENTS

1. *Ribbon Control Bracket* – With the control lever in the stencil position, adjust the control bracket so the ribbon feed pawl is centered between the two feed ratchets for the full movement of the feed plate assembly.

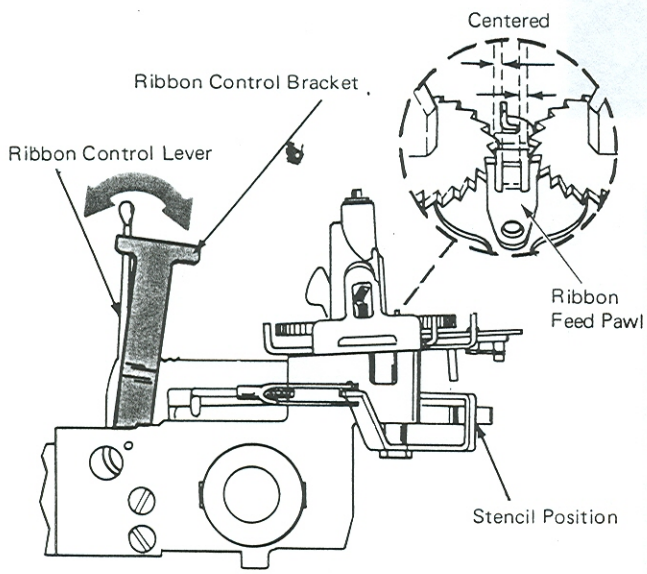

(Left Side View)

2. *Ribbon Lift Control Link* – With the ribbon control lever in the red position, adjust the control link clevis so the underscore will strike the ribbon .030"-.045" (0.76-1.14 mm) from the bottom edge.

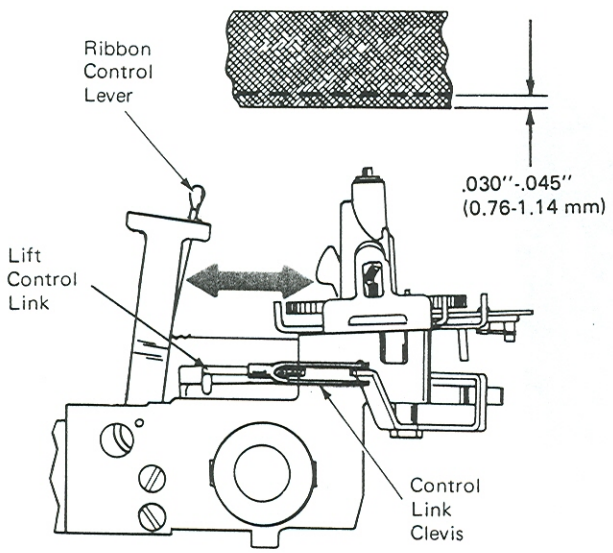

High Lift Position
(Left Side View)

MANUAL VELOCITY CONTROL OPERATIONAL THEORY

The manual velocity control provides the operator with a means of controlling the automatic velocity control feature. A control wheel mounted just to the right of the ON/OFF keybutton determines keyboard velocity. When the control wheel is in the center or normal position, the keyboard is in the automatic velocity control mode. With the control wheel rotated away from the operator, all keyboard positions will be low velocity. The control wheel must be held in this position. When the control wheel is rotated toward the operator, the keyboard will be in high velocity. This position is maintained by a detent and need not be held (Figure 1).

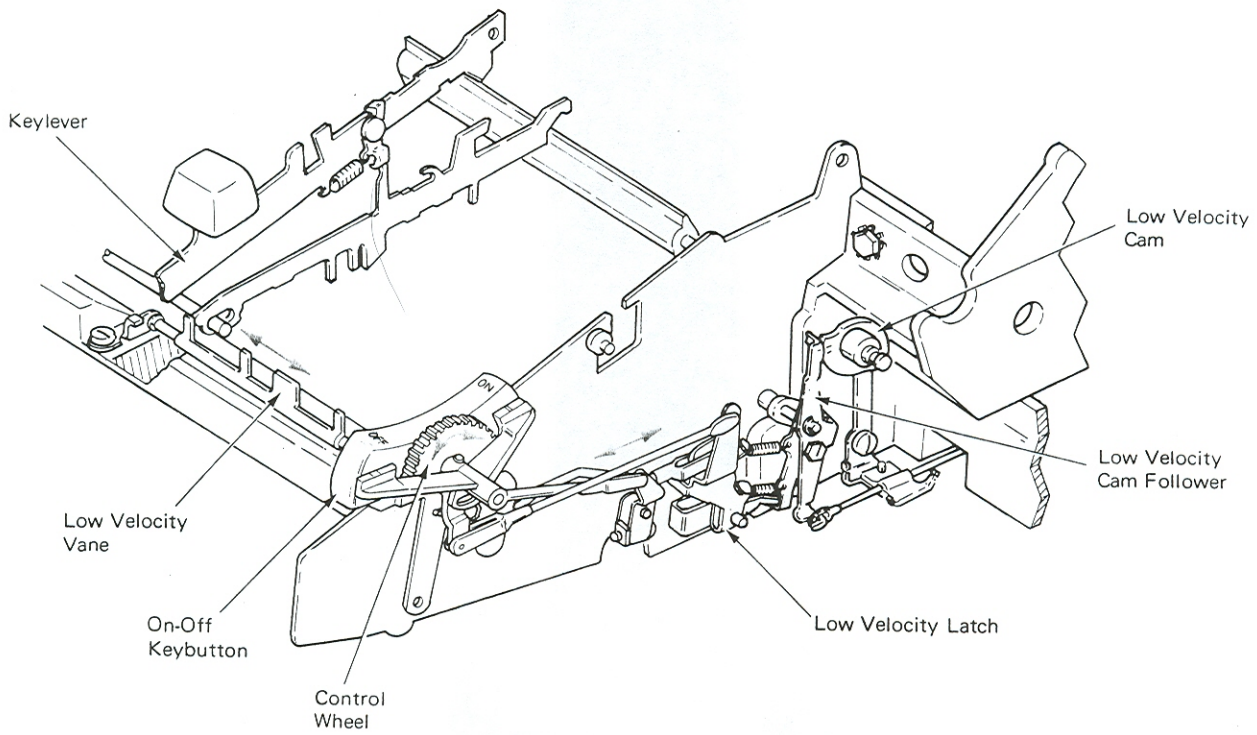

Figure 1 – Manual Velocity Control

The velocity selection lever is mounted to the right of, and on the same stud as, the low velocity latch. A link extends between the top of the velocity selection lever and a lower extension on the control wheel (Figure 2A). When the control wheel is rotated away from the operator, the link pulls the top of the velocity selection lever toward the front of the machine. A lug on the velocity selection lever contacts the low velocity latch and rotates it away from the low velocity cam follower stop. With the control wheel held in this position, the cam follower is allowed to provide low velocity from any keyboard position (Figure 2B).

When the control wheel is rotated toward the front of the machine, the top of the velocity selection lever is pushed toward the rear of the machine. Another lug on the velocity selection lever contacts the low velocity link and pushes it up out of the foot of the "L" slot. When an interposer operates the low velocity vane, the low velocity bellcrank will pull the link and the link will slide down the slot and will not be able to move the latch (Figure 2C).

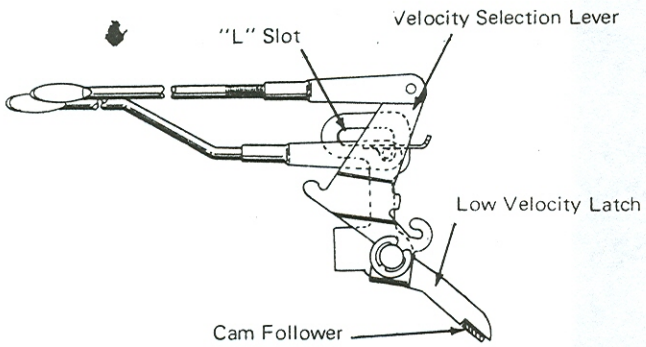

Figure 2A – At Rest

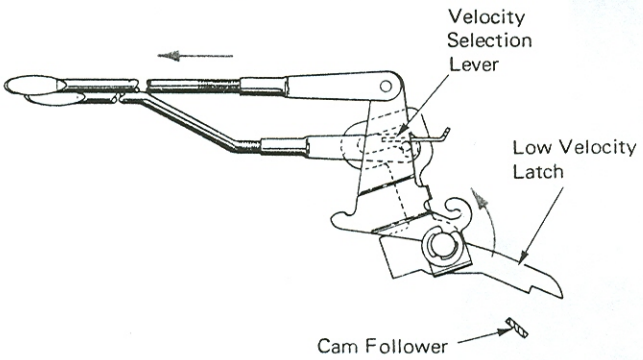

Figure 2B – All Low

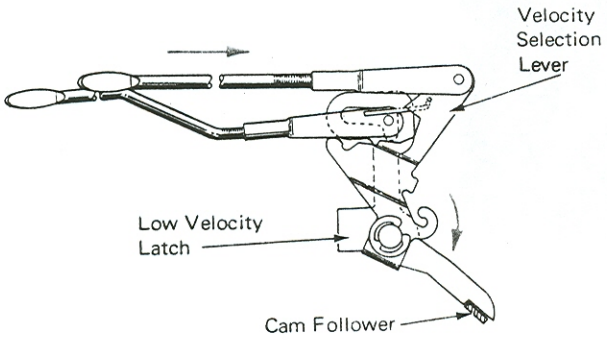

Figure 2C – All High

Figure 2 – Manual Velocity Selection (Right Side View)

MANUAL VELOCITY CONTROL ADJUSTMENTS

1. *Velocity Control Indicator* – The indicator should be adjusted to satisfy two conditions.

   a. *Rotational* – Adjust the indicator to match the angle of the keyboard.

   b. *Lateral* – Adjust the indicator left-to-right to maintain .002"-.010" (0.05-0.25 mm) end play of the velocity control indicator wheel.

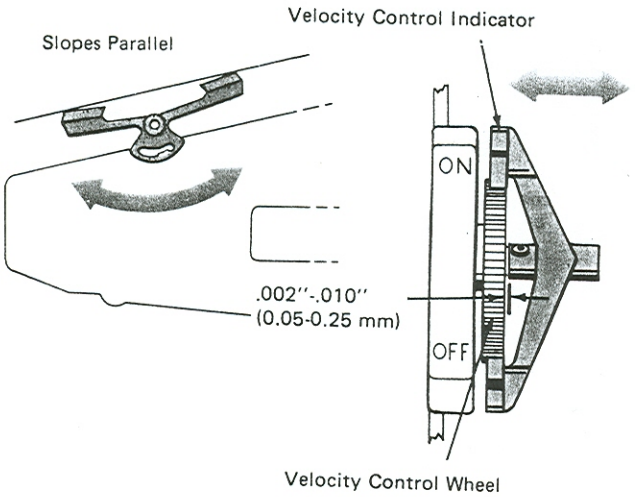

2. *Low Velocity Link* – Disconnect the clevis from the low velocity latch. With the machine at rest and the low velocity vane against the tail of the interposers, adjust the clevis .020"-.025" (0.51-0.64 mm) past the end of the slot in the low velocity latch.

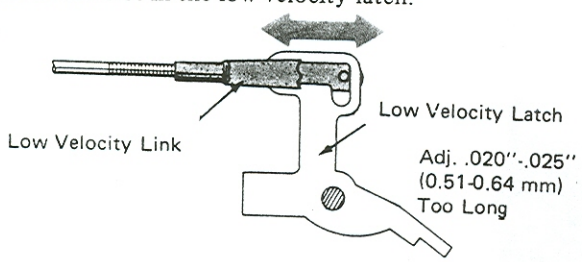

3. *Velocity Control Link* – Adjust the clevis so the control wheel will completely lift the low velocity latch link to the top of the slot in the velocity latch.

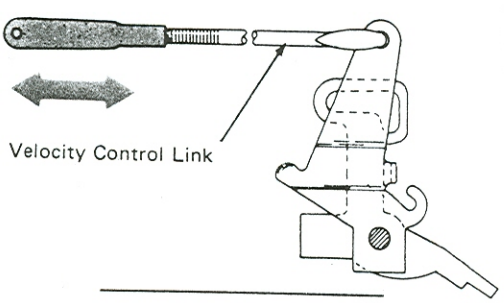

BLANK PAGE IN MANUAL FOR ADDING NOTES

PIN FEED PLATEN OPERATIONAL THEORY

The purpose of the pin feed platen is to feed continuous forms (Figure 1). This is done by pin wheel assemblies, on ach end of the platen which engage holes across the outside edges of the form. Platen cores come in lengths to fit most standard width forms.

During operation, the feed roll release lever should be forward in the released position because the feed rolls are not required to feed the paper.

The platen core is keyed to the right-hand pin wheel body. The pin wheel body is attached by setscrews to a hexagon-shaped platen shaft and rotates with the shaft when the platen is indexed. Each pin wheel body contains 9 pins spaced around its surface. A cam mounts over the hub of the pin wheel and fits into a guide slot in each pin. Mounted on the cam is a control plate which prevents the cam from rotating. The cam control plate is prevented from rotating by an anchor rod. The anchor rod extends the width of the platen and is mounted to each side of the center cover.

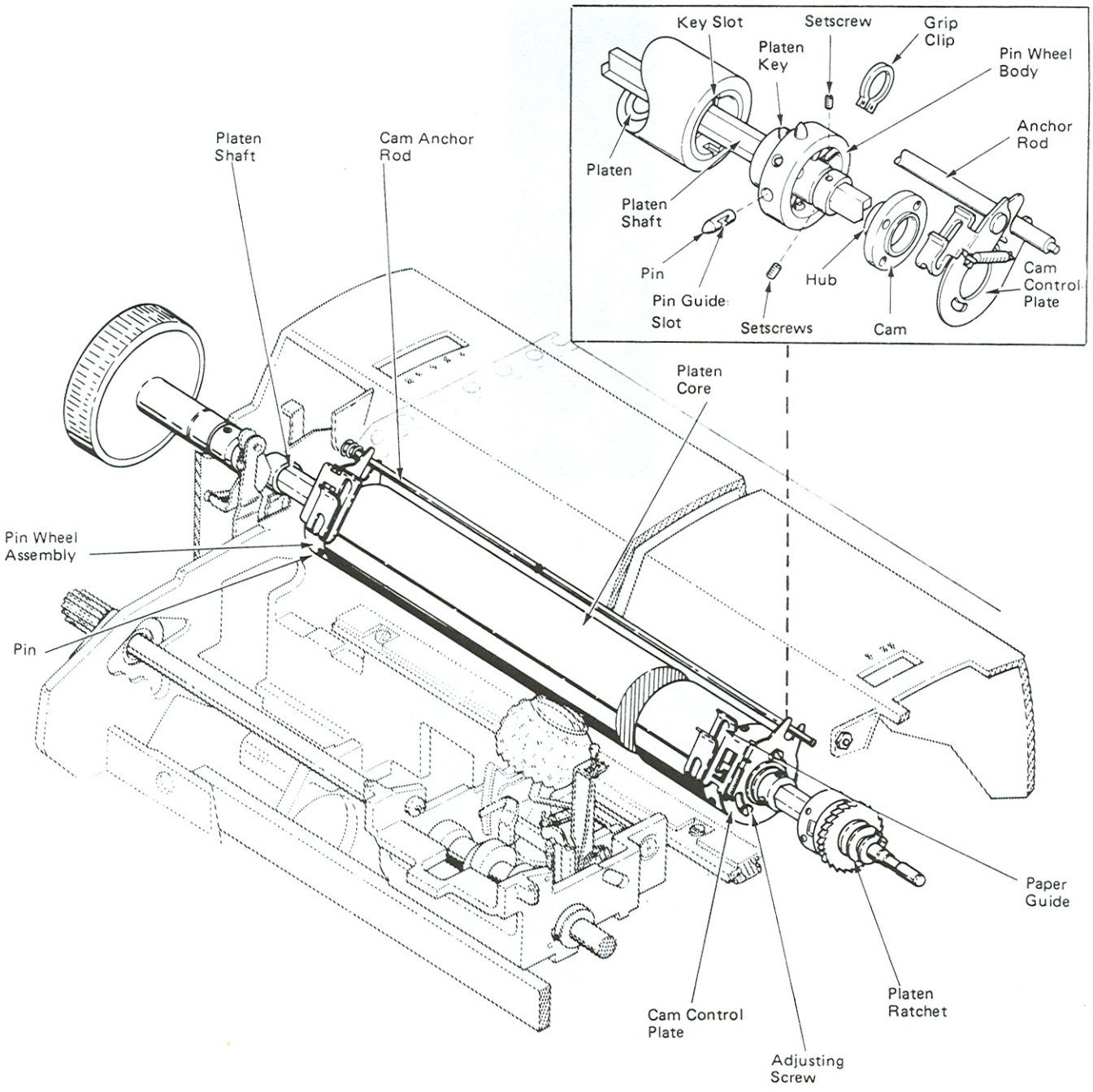

Figure 1 – Pin Feed Platen Assembly

PIN WHEEL OPERATION

As the pin wheel body turns, the pins move around the stationary cam and move in and out of their holes as they pass the high point of the cam. This means that the pins will exit and enter the pin wheel body at an exact position which provides the motion necessary to feed forms through the typewriter (Figure 2). The point at which the pins reach their fully extended position can be changed by adjusting the position of the cam high point.

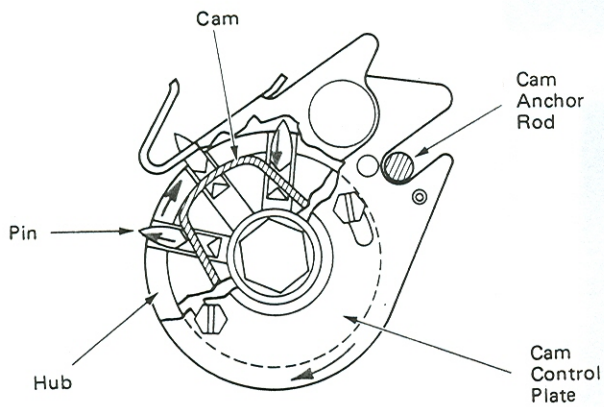

Figure 2 – Pin Wheel Assembly (Right Side View)

PLATEN RATCHET AND VARIABLE

The platen ratchet is attached to the right end of the platen shaft (Figure 3). The platen ratchet is rotated by the index mechanism. Rotational motion of the ratchet is coupled to the platen shaft through the platen variable mechanism.

The platen variable mechanism consists of a variable shaft, compression spring, driver pin, variable driver and a driver guide which is attached by setscrews to the platen shaft. The variable driver may be released from the platen ratchet by pushing in on the right-hand platen knob. This allows the operator to reposition the writing line without moving the platen ratchet.

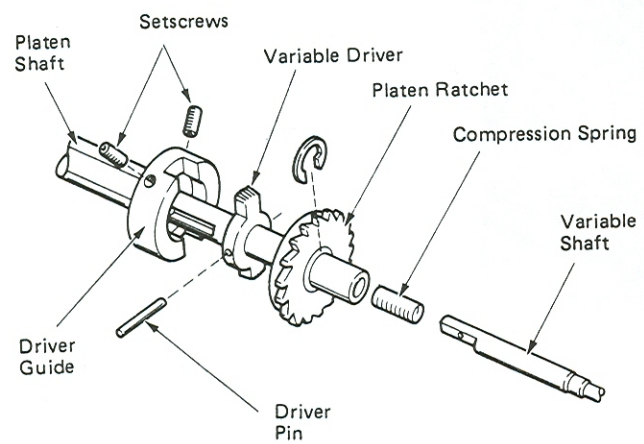

Figure 3 – Platen Ratchet And Variable

PAPER GUIDE

The paper guides are attached to the right and left arm control plates and are positioned in front of the extended pins to guide the paper (Figure 4). The paper guides may be pivoted upward to aid in positioning the form paper around the platen and over the extended pins.

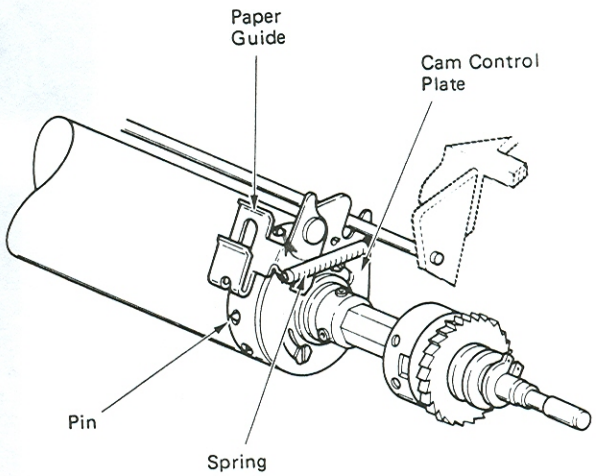

Figure 4 – Paper Guide

CARDHOLDER

The pin feed platen mechanism uses a metal cardholder (Figure 5). The "bridge" area may be removed if it is necessary to prevent contact with the pin wheels on paper guides when the carrier is close to either end of the platen.

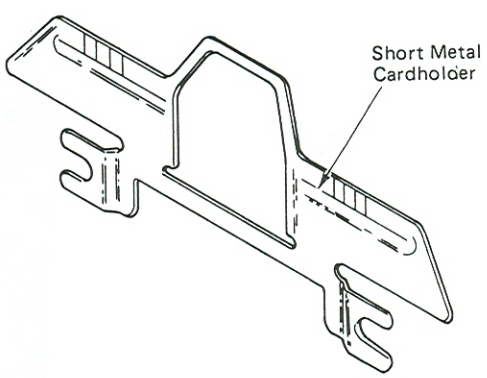

Figure 5 – Card Holder

BAIL ROLLERS

Large diameter bail rollers are available for use with the pin feed platen to aid in keeping the form paper flat against the platen.

PIN FEED PLATEN ADJUSTMENTS

1. *Platen Core Lateral Position (Level 1)* – Loosen the locknuts on both ends of the platen and center the core. Turn locknuts in and tighten.

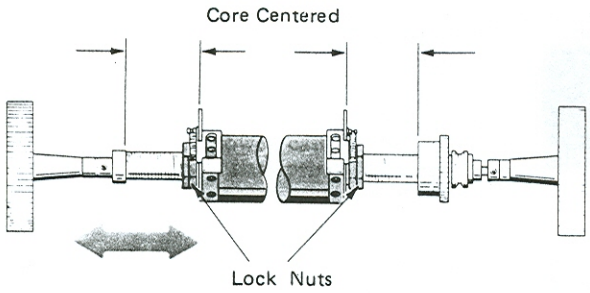

(Front View)

Level 2 – Loosen the setscrews in the pin wheel bodies, center the core and slide the pin wheel assemblies up against each end. Tighten the setscrews.

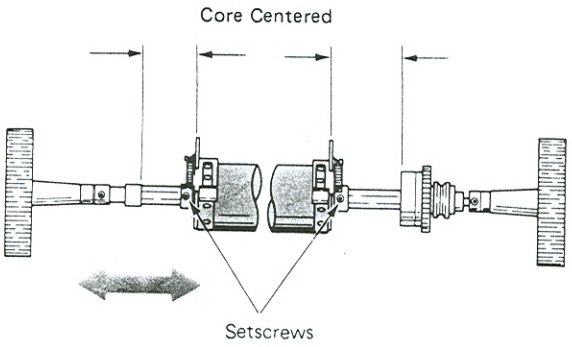

(Front View)

2. *Pin Wheel Assembly* – Adjust the cam on the control plate so the pins are fully extended immediately after passing into the slot of the form guide.

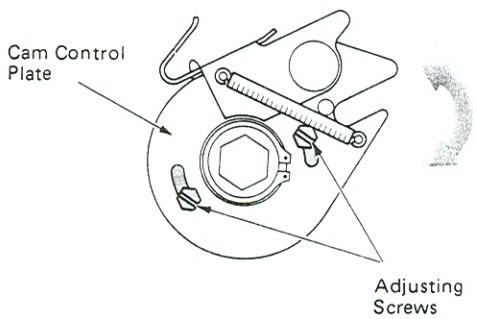

(Right Side View)

3. *Paper Guide* – Form the front extension on the paper guides front to rear for a minimum of .010" (0.25 mm) clearance between the inside bottom of the guide and a fully extended pin as it passes under the guide.

The above condition must exist when the paper bail is resting against the paper guides, and the large paper bail rollers clear the platen by .001"-.030" (0.03-0.76 mm) and the small rollers clear the platen by .050"-.060" (1.27-1.53 mm).

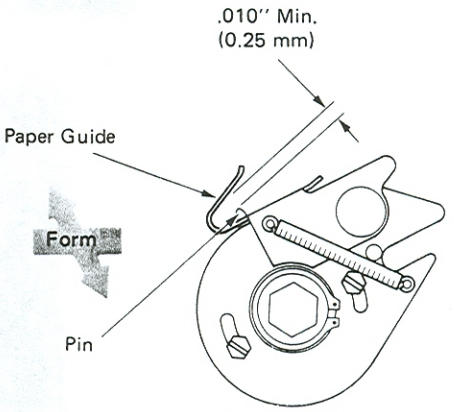

(Right Side View)

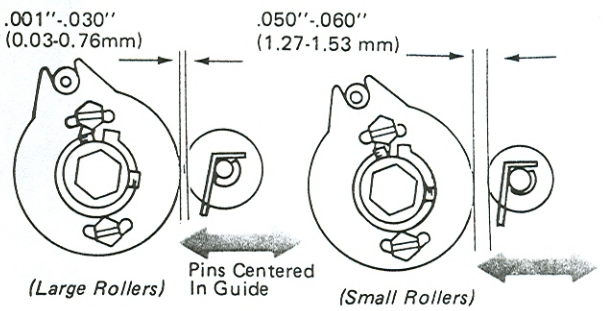

4. *Cardholder* – Adjust the cardholder for the following conditions:

   a. Position the cardholder up or down so the bottom of a row of typed "V"s is .002"-.005" (0.05-0.13 mm) above the top edge of the cardholder.

   b. Position the cardholder left or right so the bottom of a typed "V" is centered on the vertical marks on the cardholder.

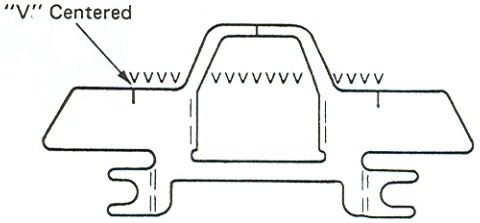

PIN FEED PLATEN OPERATIONAL THEORY

The purpose of the pin feed platen is to feed continuous forms (Figure 1). This is done by pin wheel assemblies, on ach end of the platen which engage holes across the outside edges of the form. Platen cores come in lengths to fit most standard width forms.

During operation, the feed roll release lever should be forward in the released position because the feed rolls are not required to feed the paper.

The platen core is keyed to the right-hand pin wheel body. The pin wheel body is attached by setscrews to a hexagon-shaped platen shaft and rotates with the shaft when the platen is indexed. Each pin wheel body contains 9 pins spaced around its surface. A cam mounts over the hub of the pin wheel and fits into a guide slot in each pin. Mounted on the cam is a control plate which prevents the cam from rotating. The cam control plate is prevented from rotating by an anchor rod. The anchor rod extends the width of the platen and is mounted to each side of the center cover.

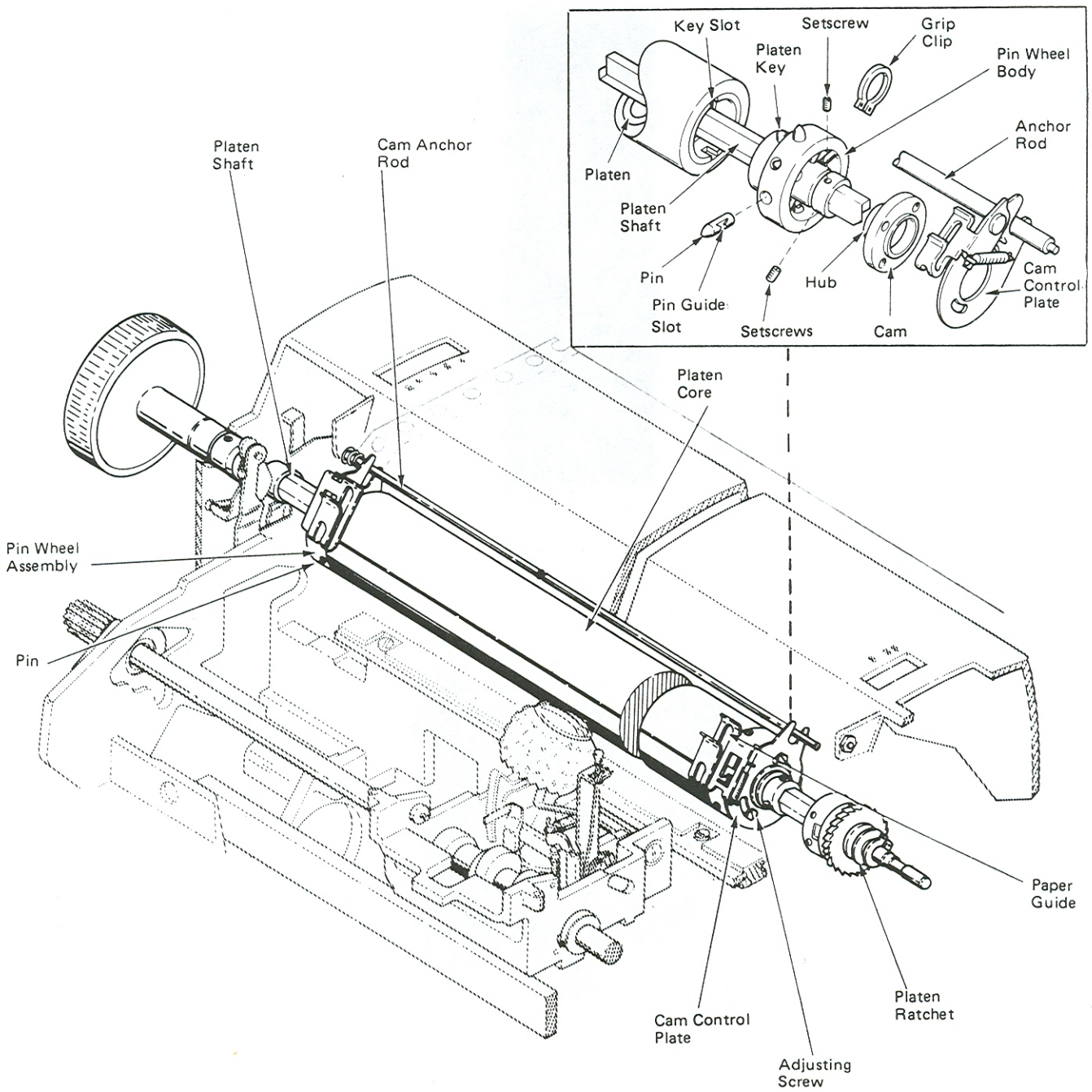

Figure 1 – Pin Feed Platen Assembly

SHIFT SENSING MECHANISM OPERATIONAL THEORY

The purpose of the shift sensing mechanism is to move the low velocity vane to the left when the machine is in the upper case mode. This allows certain keyboard positions, that are low velocity in lower case, to be high velocity in upper case. This is used on keyboards with the ten-key number inset such as the 056 and 065 OCR keyboards where the numbers 8 and 9 are above the comma and period (Figure 1).

With the machine in lower case, the low velocity vane is held to the right by a flat spring. The vane actuating bellcrank is mounted to the rear of the vane and held against its spring tension in a counterclockwise position by the shift sensing cable. The other end of the cable is mounted to a plate on the rear of the shift arm. When the machine is shifted to uppercase, tension on the sensing cable is released and the bellcrank spring rotates the bellcrank clockwise. As the bellcrank rotates, it pushes the low velocity vane to the left. This allows certain interposers which have low velocity in lower case to now have high velocity in upper case because the lugs on the low velocity vane are not in front of the interposers.

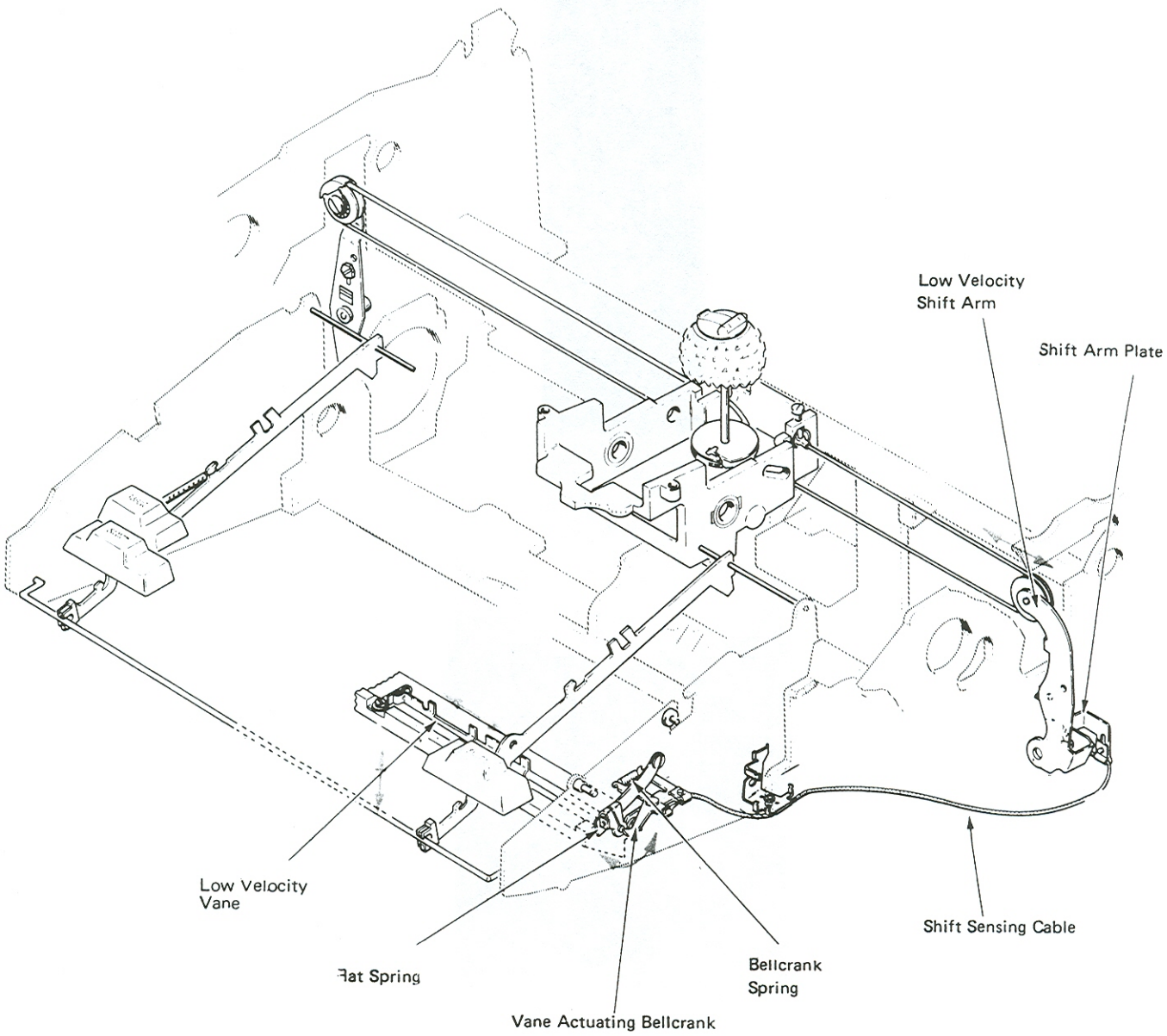

Figure 1 – Shift Sensing Mechanism

SHIFT SENSING MECHANISM ADJUSTMENTS

1. *Vane Return Spring* – Ensure that the low velocity vane does not bind off on the vane return spring.

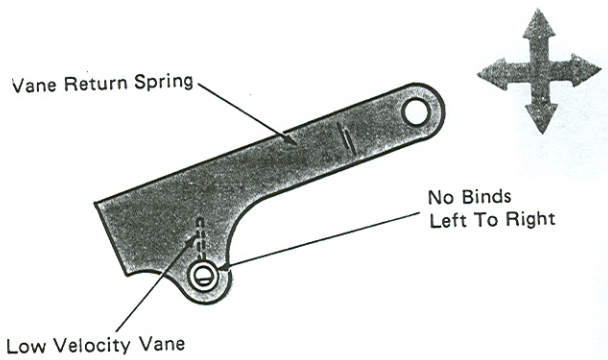

2. *Vane Bellcrank* – Adjust the bellcrank left to right so the vane moves .095"-.105" (2.41-2.67 mm) to the left when actuated.

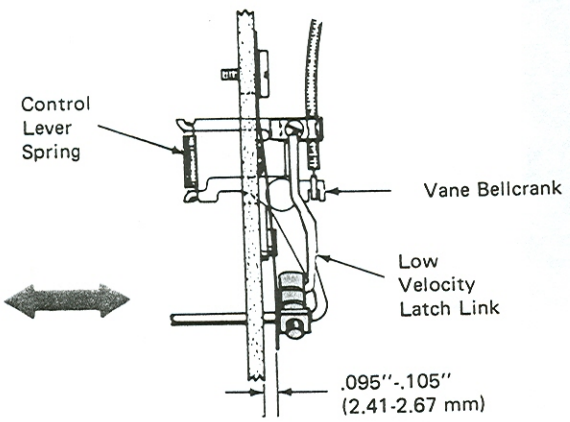

3. *Actuating Bellcrank Bracket* – Adjust the bellcrank bracket so the actuating tip moves in the center line of the low velocity vane shaft.

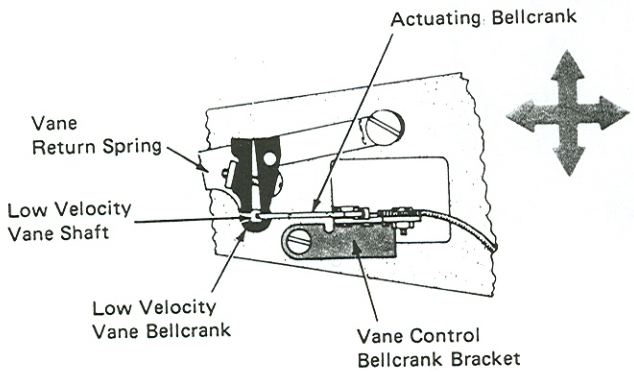

4. *Rear Cable Clamp* – Adjust the cover under the rear cable clamp so the cover is flush with the clamp bracket.

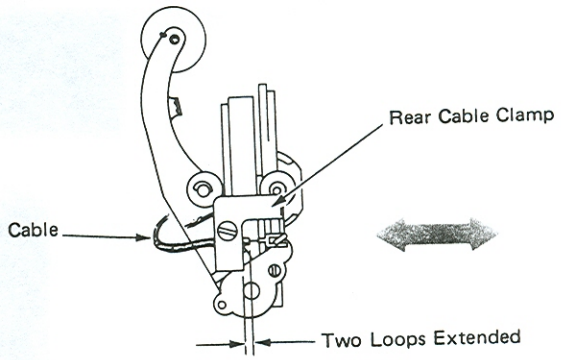

5. *Front Cable Clamp* – Adjust the cover under the clamp so the front cable anchor does not restrain the actuating bellcrank when the machine is in upper case.

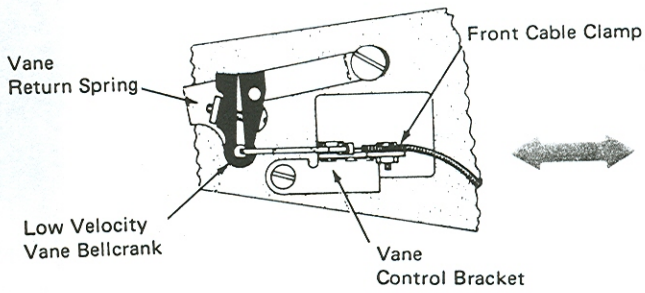

6. *Center Cable Clamp* – Adjust the cover under the clamp so most of the slack is to the rear of the clamp.

NOTE: When adjusting either of the three cable clamps, caution should be taken to ensure that the cable does not bend in either the rest or activated position. There should be enough room at either end of the cover for free motion of the cable and the cover should not interfere with other links or mechanisms.

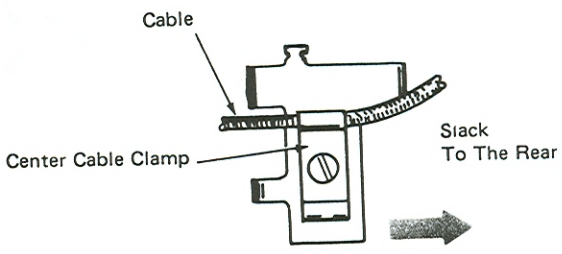

STROKE COUNTER OPERATIONAL THEORY

The purpose of the stroke counter is to record usage of the "Selectric," "Selectric" II and Correcting "Selectric" typewriters. This is done by a mechanical counter mounted inside the power frame above the left-hand cam of the cycle shaft assembly (Figure 1).

The stroke counter arm is spring loaded against the cam and moves up and down with the cam surface each time the cycle shaft operates. The left-hand dust shield has a part removed to allow the counter to be read.

Stroke counters for the "Selectric," "Selectric" II and Correcting "Selectric" typewriters are available with a 10:1, 100:1 or 240:1 ratio. This means that for every 100 print operations, the 100:1 ratio counter will advance 1, etc.

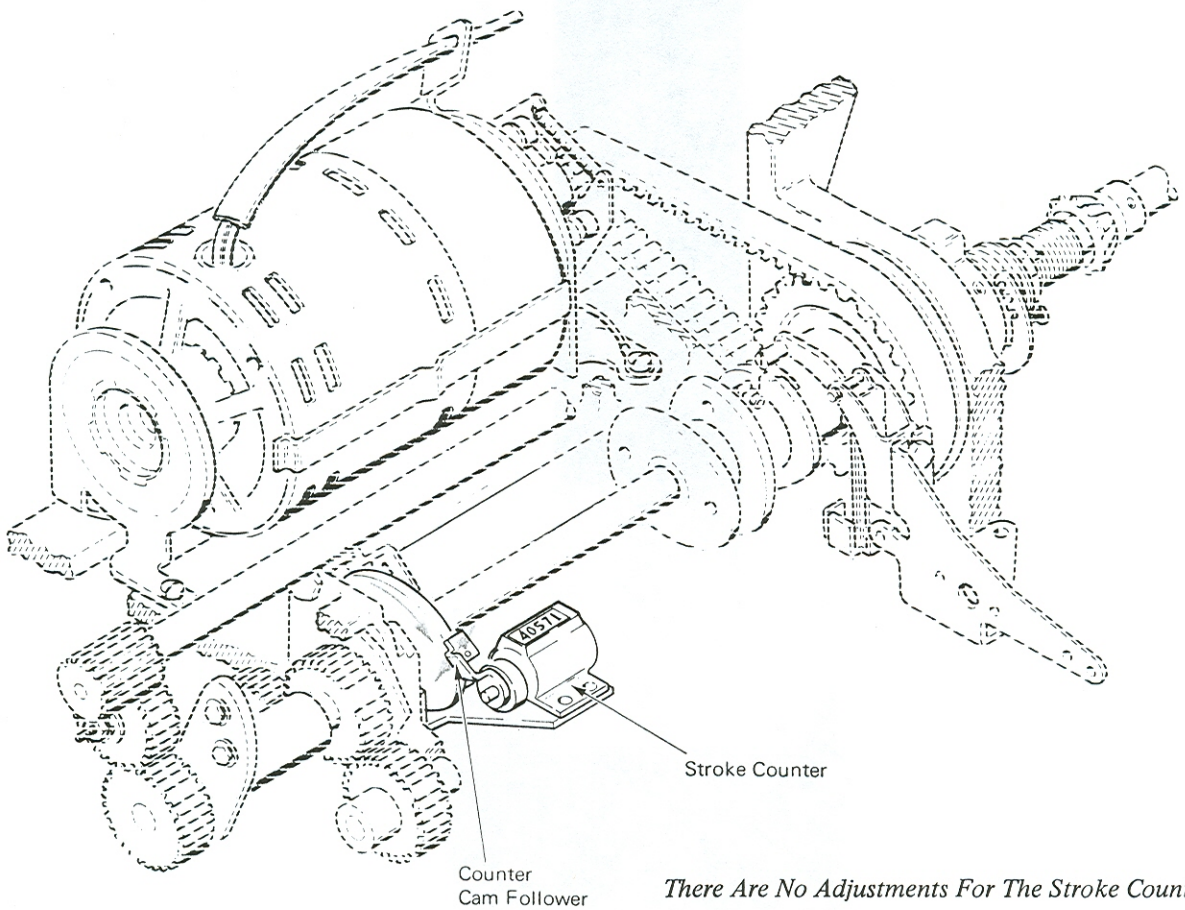

There Are No Adjustments For The Stroke Counter.

Figure 1 – Stroke Counter

BLANK PAGE IN MANUAL FOR ADDING NOTES

REMOVAL PROCEDURES

COVER REMOVAL

Levels 1 And 2

1. Position the carrier near the center.
2. Move the margin stops away from the carrier.
3. Tip the machine on its back.
4. If Level 1 cover, loosen cover screw at center rear.
5. Push rear of cover straight away from machine.
6. a. If Level 1 cover, lift bottom cover vertically to free front brackets.
   b. If Level 2 cover, push front of bottom cover straight away from machine.
7. Remove the power cord from the rear vent grille.
8. Loosen the four mounting screws that hold the mounting plates to the center cover.
9. Set the machine on its feet, then pivot the locking plates from below the mounting screws.
10. Pull the paper release lever and paper bail forward.
11. If the machine is equipped with a paper table, pivot the paper table to the rear.
12. Raise the top cover and remove the platen by releasing the latch at each end.
13. Latch both margin levers and the red pointer up.
14. Remove the top and center cover by lifting straight up.
15. Install platen.

Level 3

1. Position the carrier near the center.
2. Move the margin stops away from the carrier.
3. Pull the paper release lever and the paper bail forward.
4. Raise the top cover and pivot the paper table to the rear.
5. Remove the platen by releasing the latch at each end.
6. Pull the cover release levers (inside center cover section) forward.
7. Latch both margin levers and the red pointer up.
8. Lift the top and center cover straight up.
9. Remove the plastic vent grille by lifting straight up.
10. Reinstall platen.
11. Pull bottom cover release lever forward.
12. Machine may now be tilted up within the bottom cover.

TILT RING AND ROTATE SHAFT REMOVAL

1. Remove the dust cover and ribbon.
2. Center the carrier over the cycle shaft.
3. Shift the machine to upper case.
4. Half cycle a zero rotate, tilt 2 character.
5. Remove the "C" clip and disconnect the tilt pulley link (gearless tilt mechanism only).
6. Loosen the tilt ring pivot pin setscrews.
7. Remove the two pivot pins.
8. Remove the tilt ring and dog bone.
9. Loosen the rotate pulley setscrew.
10. Use the butt end of the small springhook as a follower to push out the rotate shaft. This prevents the wedge from being lost. When replacing the shaft, be sure the pin is pointing toward the front-left and right-rear corners.
11. The following adjustments should be checked after the rotate shaft and tilt ring are replaced:

    a. Tilt detent
    b. Typehead homing
    c. Tilt ring
    d. Upper ball socket

CARRIER AND ROCKER ASSEMBLY REMOVAL

1. Remove the platen, deflector and feed rolls.
2. Remove the cardholder and brackets.
3. Remove the tilt tape.
4. Release the rotate spring tension and remove the rotate tape.
5. Disconnect the carrier return and escapement/tab cords from the carrier.
6. Disconnect the velocity cable from the carrier.
7. Remove the escapement bracket screws and work the carrier out from below the escapement bracket.
8. Remove the print shaft.
   a. Level 1 print shafts are removed by removing the print shaft gear and sliding the print shaft out through the right bearing.
   b. Level 2 print shafts are removed by removing the "C" clip to the right of the left bearing and sliding the print shaft out through the left bearing.
9. The carrier assembly may now be lifted from the machine.

ROCKER ASSEMBLY REMOVAL

1. Remove the ribbon mechanism.
2. Remove the cardholder brackets.
3. Slowly release the rotate spring tension.
4. Disconnect the rotate tape.
5. Disconnect the tilt tape.
6. Remove the gearless tilt pulley.
7. Remove the tape guide.
8. Remove the striker if present.
9. Remove the rotate spring.
10. Remove the rotate pulley.
11. Remove the impression control or velocity plate.
12. Loosen the rocker shaft setscrew.
13. Remove the "C" clip from the right side of the rocker shaft.
14. Remove the rocker shaft.
15. The rocker assembly may now be removed from the carrier.

CYCLE CLUTCH, CYCLE SHAFT AND DRIVE BELT REMOVAL

1. Position the carrier to the far right.
2. Remove the left dust cover.
3. Remove the spring that returns the positive bail.
4. Turn machine on; depress position "0" keybutton. (The latches have just been released.)
5. Remove the gear guard and lower idler gear assembly.
6. Remove the "C" clip, check pawl and spring.
7. Remove the cycle shaft bearing screws, dustcover retainer and metal gear guard.
8. Loosen the bearing plate from the frame by pulling it away from the frame (front first) with a screwdriver.
9. Remove the cycle shaft, pushing the negative 5 and rotate 2 links out of the way with the pusher end of a springhook.
10. On machines without an adjustable collar, check to see that the shims remain in place. Check for proper end play .001"-.006" (0.03-0.15 mm). Insert more shims if necessary.
11. The drive belt or cycle clutch can now be removed.
12. The following adjustments should be checked after the cycle shaft is replaced:

    a. Idler gear latch overlap
    b. Cycle shaft end play
    c. Cycle clutch spring
    d. Cycle clutch latch overlap
    e. Damper spring (if used)
    f. Filter shaft timing
    g. Print shaft timing

ROTATE SELECTION DIFFERENTIAL REMOVAL

1. Position the carrier to the far right.
2. Remove the left dust cover, platen, feed rolls and paper deflector.
3. Remove the machine from the bottom pan.
4. Disconnect the clevises and remove them from the selector latch links.
5. Remove the latch bail spring.
6. Remove the motor.
7. Remove the rotate latch springs.
8. Pull out the rotate links.
9. Disconnect the tilt differential spring.
10. Remove the upper guide bracket screws.
11. Remove the balance arm mounting stud.
12. Disconnect the negative 5 bail drive link from the right end of the balance arm.
13. Rotate the cycle shaft until the cam followers are on the low points of the cams.
14. Remove the rotate differential assembly.
15. The following adjustments should be checked after the rotate selection differential assembly is replaced:

    a. Typehead homing
    b. Rotate latch clearance
    c. Rotate differential guides
    d. Selector latch links

KEYBUTTONS

When replacing a keybutton, use the following procedure: Disconnect the linecord; turn the switch to the ON position; and hand cycle the machine while holding the keylever down until the interposer is out from under the keylever pawl. This will allow the interposer to enter the selector compensator and prevent the keylever pawl and interposer from being bent or broken when pressure is applied to the keybutton. If more than one keybutton is replaced, the machine should be cycled each time to allow the next interposer to enter the compensator.

The end of the 6" (152.4 mm) screwdriver can be placed in the forming slot of each keylever to prevent the slot from closing up when placing pressure on the keybutton.

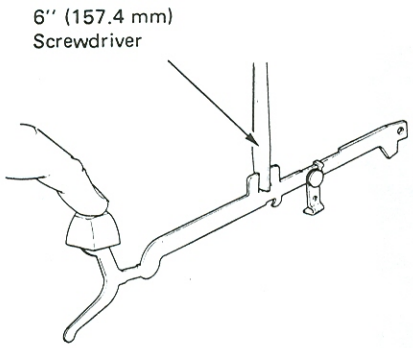

KEYBOARD INTERPOSER REMOVAL

1. Align the carrier over the linelock interposer.
2. Disconnect the operational keylever springs and repeat bail spring.
3. Remove the keylever upstop.
4. Remove the spacebar equalizing rod.
5. Remove the bell bail lever.
6. Remove the bellringer bail.
7. Remove the margin rack.
8. Slip sound deadening over operational keybuttons and pivot the keyboard up and out of the way.
9. Push the fulcrum rod to the interposer being removed with a fulcrum rod tool.
10. Remove the spring from the interposer being removed.

KEYLEVER REMOVAL

1. Remove top cover.
2. Remove keybutton.
3. Remove margin rack from right-hand side.
4. Loosen bell bail lever.
5. Lift up bellringer bail. (Do not remove completely.)
6. Drop keylever from fulcrum rod and pull keylever out toward the rear of the machine.
7. Reverse this procedure to install new keylever.

This should not be done in cases where loose keybuttons are a problem, i.e., automatic letter writing machines, etc.

SHIFT CAM REMOVAL

1. Turn the typehead counterclockwise and remove the released rotate tape from the shift arm pulley.

   NOTE: On one-piece shift arm, the rotate tape must be disconnected from the right side of the carrier.

2. Remove the shift interlock spring, the shift release arm spring and the shift detent spring.
3. Remove the "C" clip from the operational shaft and remove the shift clutch ratchet.

7X1

4. Remove the interlock.
5. Remove the detent arm.
6. Disconnect the shift release link.
7. Remove the shift release arm.

XX3-XX5

4. Disconnect the shift release link.
5. Remove the shift support bracket screw.
6. Remove the shift support bracket, interlock and shift release lever as an assembly.
7. Remove the detent arm.

All

8. Remove the shift clutch spring (behind the ratchet).

   NOTE: Observe the spring position for replacement.

9. Remove the shift clutch arbor.
10. Remove the shift cam.

ROTATE SPRING REPLACEMENT

Gear Tilt

1. Remove the left dust cover.
2. Remove the ribbon.
3. Center the carrier over the cycle shaft.
   Slowly remove the tension from the rotate spring. Remove the two nuts (one on later level machines) just to the right of the yoke on the carrier; remove the black rotate spring tension clip from under the nut.
5. a. On older machines, back out the two screws on the right 1/4" (6.35 mm) and remove the screw on the left, which is under the cycle shaft.
   b. On new machines, remove the lower right and left screws and back out the upper right screw 1/4" (6.35 mm).
6. Remove the striker and rotate spring retaining plate. The rotate spring can now be removed.

   NOTE: In new machines there may be a spring clip (P/N 1141238) that prevents the spring from being held in the pulley notch. If not, one should be added when reassembled.

7. The following adjustments should be checked after the rotate spring is replaced:

   a. Rotate spring tension
   b. Typehead homing
   c. Damper spring (if used)

Gearless Tilt

1. Remove the left dust shield.
2. Center the carrier over the cycle shaft.
3. Remove the tension from the rotate spring slowly.
4. Remove the screws from the rotate spring retaining plate.
   Remove the rotate spring retaining plate. The rotate spring may now be removed.
6. The following adjustments should be checked after the rotate spring is replaced:

   a. Rotate spring tension
   b. Typehead homing
   c. Damper spring (if used)

OPERATIONAL SHAFT REMOVAL

1. Remove the shift clutch ratchet and clutch spring. Do not maladjust the clutch arbor.
2. Loosen setscrews in torque limiter hub, tab governor hub, tab governor collar, and operational cam ratchet (and RH shaft collar if long carriage).
3. Remove clip from CR pinion spring.
4. Level 1 machines – Push torque limiter hub to the left as far as possible; then, expand the coils on the CR pinion spring and, with the pusher end of a springhook, push the left-hand pinion retainer off the shaft.
5. Move the pinion gear to the left and remove the retainer clip at the right side.
6. The operational shaft may now be pulled out through the shift bearing toward the right. Any part mounted on the shaft or around it may be easily removed or replaced.

Inserting the turning wheel in the operational shaft before removal or installation of the shaft will help in handling the shaft.

The shift clutch arbor is not loosened from the shaft when the shaft is removed. Therefore, when reinstalling the shaft, push it in until the arbor is against the shift bearing [.002"-.004" (0.05-0.10 mm) end play]. This will place the carrier return pinion gear into the same position as before. Since the shift mechanism was not removed, no shift adjustments are changed.

In order to reset the operational cams in their original position, use the push end of a springhook to equally measure distance between cams and check pawls. For ratchets which have only one setscrew, be certain the screw is tightened to the flat side of the operational shaft.

Reset the tab governor hub and collar, observing the proper engagement and end play adjustments.

After reinstalling the "C" clip retainers on either side of the carrier return pinion gear, move the torque limiter spring hub to the right as far as possible. Then move the torque limiter spring loops and insert a .005" (0.13 mm) feeler gauge blade between the torque limiter hub and the torque limiter arbor. Tighten the torque limiter hub; then remove the gauge.

Install the clip which connects the carrier return pinion spring to the torque limiter arbor.

OPERATIONAL CAM FOLLOWER REPLACEMENT

When necessary to replace the carrier return or spacebar cam follower, replace both.

The suggested replacement procedure is as follows:

1. Unplug machine.
2. Remove escapement trip link.
3. This procedure does not require removal of the operational shaft; however, it may be removed at this time.
4. Disconnect carrier return and spacebar cam follower restoring springs.
5. Remove ON/OFF switch from mounting bracket.
6. (RB/S) Remove index interlock link.
7. Disconnect lower index link from multiplying lever.
8. Remove the spacebar (NRB/S), carrier return and backspace latch springs.
9. Loosen carrier return latch assembly setscrew and move latch assembly toward center of machine (Figure 1) and pivot up as shown (Figure 2).

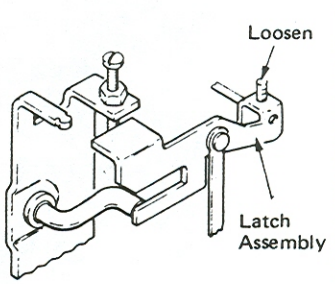

(Rear View)

Figure 1

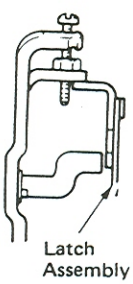

(Rear View)

Figure 2

10. Install splined wrench through holes in interposers and attach to RH mounting bracket with paper clip (Figure 3).

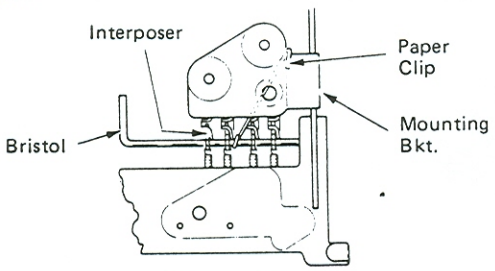

(Bottom View)

Figure 3

11. (Correcting) Disconnect correcting keylever link and spring from mode latch.
12. Remove all "C" clips (8) from pivot shaft and remove shaft from right.
13. Remove carrier return cam follower (from front or rear).
14. (RB/S) Disconnect spacebar link at top clevis (Figure 4).

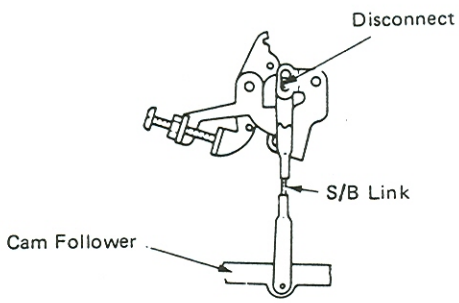

(Right Side View)

Figure 4

15. Remove spacebar cam follower from front of machine.
16. Replace carrier return cam follower:

    a. (RB/S) Position the index, carrier return and backspace interposers between the cam follower arms (Figure 5).

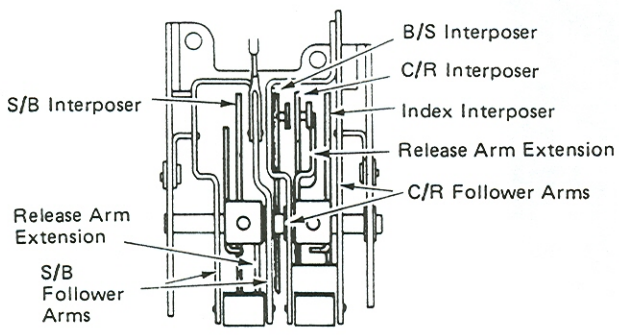

(Top View)

Figure 5

    o. (RB/S) Position the carrier return and backspace latches to the front of the cam follower bail (Figure 6).

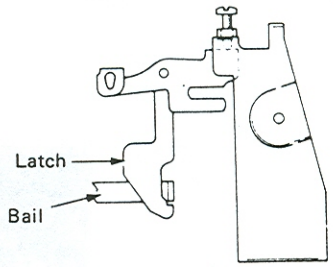

(Right Side View)

Figure 6

    (NRB/S) Position the index and carrier return interposers between the cam follower arms (Figure 7).

    c. Position the clutch release arm to the right of the carrier return interposer (Figures 5 and 7).

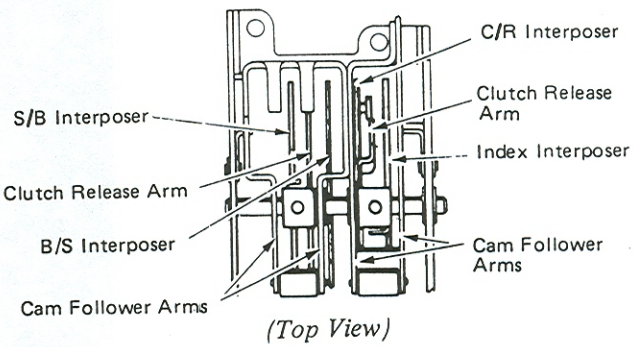

(Top View)

Figure 7

17. Install pivot pin through right-hand cage plate, carrier return cam follower and clutch release arm.
18. Install spacebar cam follower:

    a. (RB/S) Spacebar link may be installed with the cam follower. With cam follower in place, hook clevis to bellcrank.
    b. (RB/S) Position the spacebar interposer and clutch release arm between the cam follower arms with the clutch release arm to the right of the interposer (Figure 5).
    c. (NRB/S) Position the backspace and spacebar interposers and clutch release arm between cam follower arms (Figure 7) with the latches in their slots and under the cam follower bail (Figure 8). The clutch release arm extension should be between the interposers (Figure 7).

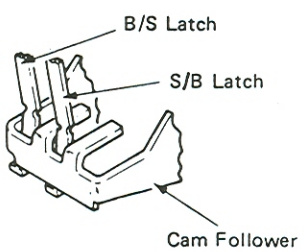

(Rear View)

Figure 8

19. Install the pivot pin through the spacebar cam follower and clutch release arm and install the "C" clips in the following order (Figure 9). Number 8 is a bias "C" clip.

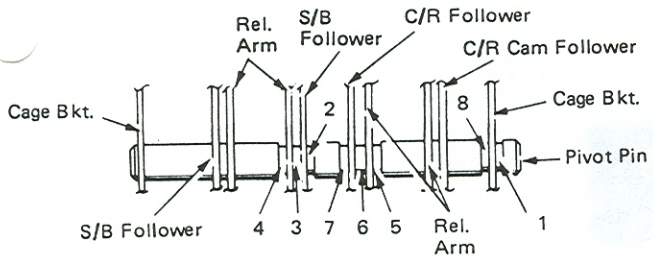

(Bottom View)

Figure 9

20. Position the carrier return latch assembly in place and with pusher end of springhook, push arm against carrier return spring and tighten setscrew (Figure 10).

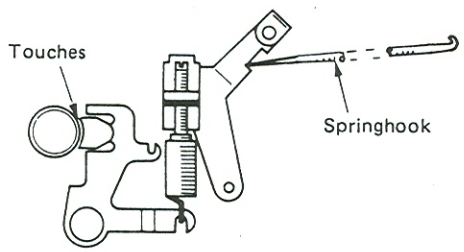

(Level 2)

Figure 10

21. Install index link to multiplying lever. (Rear hole is for 36 tooth only.)
22. Hook spacebar (NRB/S), carrier return and backspace latch springs. (This is done by half cycling the operational cam while holding latch from under bail. Latches may now be easily accessed.)
23. Reconnect carrier return and spacebar cam follower restoring springs.
24. Replace index interlock link.
25. Replace ON/OFF switch.
26. Reconnect correcting keylever link and spring.
27. Remove paper clip and splined wrench.
28. Replace and adjust escapement trip link.
29. Adjust the index interlock link (RB/S).
30. Adjust the index interlock paddle (RB/S).
31. All index adjustments should be made at this time.
32. Adjust spacebar link.
33. Latch height should be adjusted for proper clearance between latches and bails with interposers released.
34. Adjust carrier latch overthrow.
35. Adjust correcting keylever link.
36. Adjust carrier return shoe clearance.

OPERATIONAL CAM FOLLOWER ROLLER

A replaceable spacebar and carrier return cam follower roller is available. Removal of the roller and the roller rivets is performed with special tools.

NOTE: **Cam follower removal tool must be lubricated to reduce friction.** Failure to lubricate tool will make it hard to turn handle. If handle continues to bind, add washer P/N 1117394, in parts packet no. 8) between handle and tool body.

1. Remove escapement trip link.
2. (Carrier Return) Remove index link.
   (Spacebar) Move machine forward in bottom cover. Insert screwdriver under switch bracket and over cam follower, as shown, to raise cam follower roller (Figure 1).

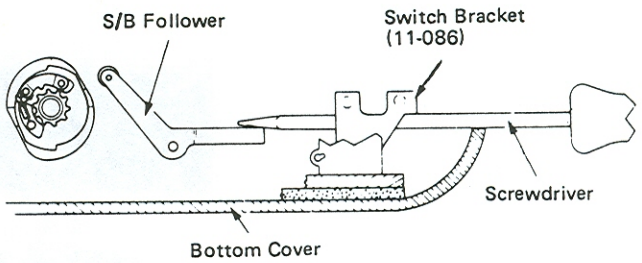

Figure 1

NOTE: Installation of the removal tool may be hard. This condition can be reduced by one of the following:

a. Use a grinder to remove part of hook as shown (Figure 2).
b. Tool can be disassembled allowing installation of hook over roller as shown. If this procedure is used, tighten shaft finger tight against roller at this time.

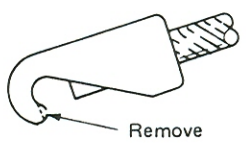

Figure 2

CAUTION: If shaft is not touching roller, it is possible that the cam follower arm will break; however, tightening shaft too tight against roller makes removal of the roller from the tool hard, and may result in breakage of the screwdriver slot. If shaft is tightened too much, the handle may be loosened until threaded part is flush with slotted end of shaft. This will provide support to extensions of shaft while loosening.

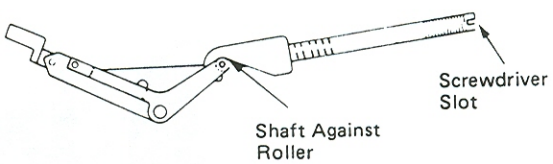

Figure 3

3. With tool installed as shown (Figure 4), ensure shaft is touching roller to lock roller in place. (This may be done with tool assembled, using the screwdriver slot in end of shaft.

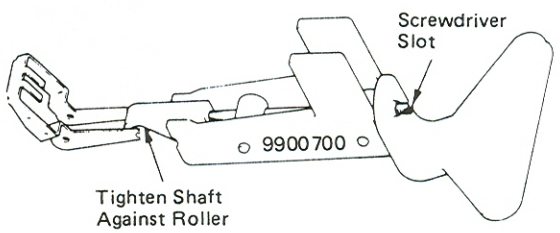

Figure 4

CAUTION: Do not tighten shaft too much; review step 2b.) Lock tool against print shaft and tighten handle until roller pulls out of follower arms.

4. If rivet heads remain in arms, install rivet tool on one side of duckbill pliers and punch rivet out. A piece of paper may be placed inside the rivet tool to help hold tool on duckbills (Figure 5).

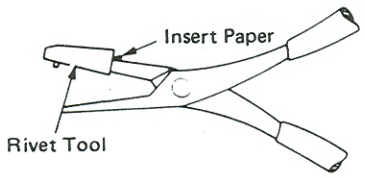

Figure 5

Install replaceable roller as shown (Figure 7).

IMPORTANT: Lubricate all replaceable parts with No. 10 oil before installation.

5. (Carrier Return) The suggested procedure is as follows: Install sleeve inside roller. Apply grease on locking plate (Figure 6).

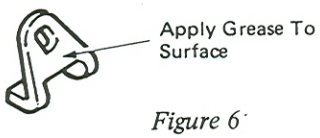

Figure 6

Align flats on sleeve with hole in locking plate and press against roller. While holding roller with scissor clamps, lower complete assembly between follower arms. LH arm should be in slot of locking plate. Install one "C" clip on pivot shaft and install pivot shaft through complete assembly. Install remaining "C" clip (Figure 7).

NOTE: Roller may also be installed using disassembled tool as shown in Figure 3.

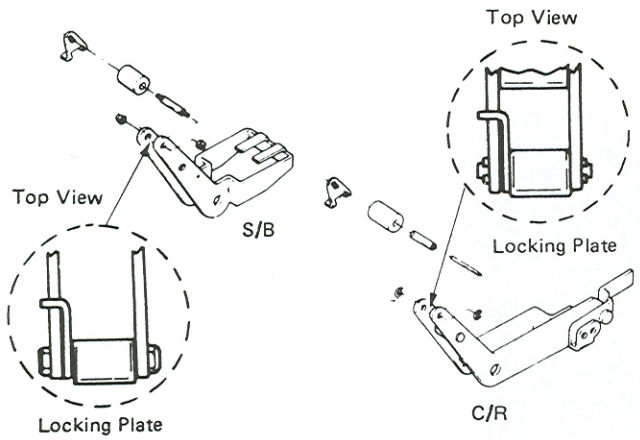

Figure 7

(Spacebar) The suggested procedure is as follows: Install typebar aligning tool between cam follower arms (Figure 8). Apply grease to locking plate and install over LH follower arm and align holes. Install pivot shaft through roller. While holding roller in place between follower arms with scissor clamps or tool as shown in Figure 3, align flats on end of shaft with slot in locking plate and remove aligning tool. Install nuts on shaft (Figure 7).

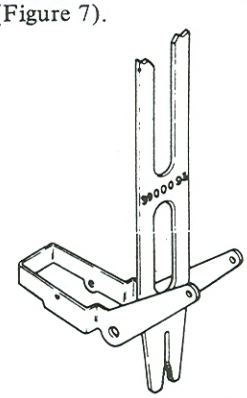

Figure 8

CAUTION: Do not tighten too much.

NOTE: Locking plate must be installed on all cam followers to ensure pivot pin does not rotate, and should be installed on the LH follower arm.

6. (Spacebar) Replace existing tab cord idler pulley with smaller pulley to ensure there is no interference between nut and pulley.
7. Replace escapement trip link and index link.
8. Roller pivots must be lubricated.
9. Check operational interposer restoring bail adjustment.
10. Check operational latch height adjustments.
11. (Carrier Return) Check carrier return overthrow.
12. (Carrier Return) Check all index adjustments.
13. (RB/S) Check backspace motion adjustments.
14. Check escapement trip link.

PRINT SLEEVE REMOVAL (CORRECTING)

1. Center the carrier.
2. Remove the ribbon mechanism.
3. Remove the print shaft.

    a. Level 1 print shafts are removed by removing the print shaft gear and sliding the print shaft out through the right bearing.
    b. Level 2 print shafts are removed by removing the "C" clip to the right side of the left bearing and sliding the print shaft out through the left bearing.

4. Remove the left and right print shaft wiper retainers.
5. Loosen the ribbon lift cam.
6. Loosen the ribbon feed and detent cam.
7. Loosen the print cam.
8. Slide ribbon lift and tape lift cams to the right.
9. Slide print sleeve to left and remove tape feed and print cams.
10. Slide print sleeve and ribbon feed cam to right.
11. Slide tape lift and ribbon lift cams to left.
12. Remove print shaft key.
13. Pull the print sleeve out through the left carrier bearing while sliding the ribbon feed, ribbon lift and tape lift cams off.
14. The following adjustments should be checked after replacing the print sleeve:

    a. Print sleeve end play
    b. Detent skirt clearance
    c. Print shaft timing
    d. Ribbon plate

PRINT SLEEVE REMOVAL (NON-CORRECTING)

1. Center the carrier.
2. Remove the ribbon mechanism.
3. Remove the print shaft.

    a. Level 1 print shafts are removed by removing the print shaft gear and sliding the print shaft out through the right bearing.
    b. Level 2 print shafts are removed by removing the "C" clip to the right side of the left bearing and sliding the print shaft out through the left bearing.

4. Remove the left print shaft wiper retainer.
5. Loosen the ribbon lift cam.
6. Loosen the ribbon feed and detent cam.
7. Loosen the print cam.
8. Slide the ribbon feed and detent cam to the right against the print cam.
9. Slide the ribbon lift cam to the right and on the print shaft key.
10. Slide the print sleeve to the right.
11. Remove the print cam.
12. Remove the ribbon feed and detent cam.
13. Slide the print sleeve to the right.
14. Slide the ribbon lift cam to the left.
15. Remove the print shaft key.
16. Pull the print sleeve out through the left carrier bearing while sliding the ribbon lift cam off.
17. The following adjustments should be checked after replacing the print sleeve:

    a. Print sleeve end play
    b. Detent skirt clearance
    c. Print shaft timing
    d. Ribbon plate

ESCAPEMENT PAWL REMOVAL

1. Remove the platen.
2. Remove the deflector and feed rolls.
3. Position the carrier near the left margin.
4. Remove the nut from the escapement pawl mounting stud.
5. Remove the escapement pawl mounting stud.
6. Remove the escapement pawl and backspace pawl.
7. Installation of the escapement and backspace pawls and spacer will be much easier if the 2 pawls and spacer are assembled and retained with a rubber band. Then the 3 parts can be installed as a single unit and the rubber band cut away.
8. The following adjustments should be checked after the escapement pawl is replaced:

    a. Escapement torque bar stop
    b. Pawl mounting stud
    c. Torque bar backstop
    d. Carrier return pawl clearance
    e. Tab pawl clearance
    f. Backspace rack
    g. Backspace motion

ROTATE TAPE REPLACEMENT

1. Perform cover removal.
2. Remove dust shields.
3. Position carrier approximately 6 inches from left side frame.
4. Half cycle a zero rotate tilt 2 character.
5. Remove the detents and turning the typehead, wind up the rotate spring approximately 3-1/2 turns or until the "T" slot is in the front of the rocker after the third turn. Allow the detents to restore.
6. Raise the tape anchor screw and install the rotate tape below the tilt tape.
7. Thread the tape around the shift arm pulley, under the carrier, under the carrier return cord, around the rotate arm pulley through the left end of the rocker pivot shaft, under the plastic guard on the tape guide, around the rotate pulley and insert the "T" end into the rotate pulley "T" slot.

    NOTE: It will be necessary to put a twist in the rotate tape between the rotate arm pulley and the rocker pivot shaft. Twist the tape so that when the rocker is in print position, the twist is at a maximum. The top of the tape should be to the front when coming out of the rocker shaft.

8. Hold the typehead and manually remove the detents. Control the type element to allow the rotate spring to slowly wind the tape as you guide it correctly around each of its pulleys.
9. Half cycle the machine to a lower case "m" and check rotate spring tension. Check homing and other adjustments as necessary.

TILT TAPE REPLACEMENT

1. Perform cover removal procedure.
2. Position carrier 3 inches from the left frame.
3. Half cycle a zero rotate, zero tilt character.
4. Remove the detents, rotate the head counterclockwise 1 rotate position, tilt the head to the 3 tilt position, allow the detents to bottom.

5. Raise the tape anchor screw and install the tilt tape above the rotate tape. (Do not release the tension on the rotate tape.)
6. Thread the tilt tape around the right tilt pulley, under the escapement bracket and around the left tilt arm pulley.
7. Insert the tilt tape through the left end of the rocker pivot shaft and install the tilt tape on the tilt bellcrank.
8. Hold the typehead, remove the detents and slowly allow the typehead to return to home, while ensuring both the tilt and rotate tapes are positioned on their pulleys.

CORD REPLACEMENT

1. Perform cover removal.
2. Remove dust shields.
3. Remove both cords and hand cycle the machine until the mainspring tension is released.
4. Disconnect the carrier return unlatching link.
5. Manually latch the carrier return mechanism and rotate the turning wheel, while counting escapement shaft revolutions, until the mainspring is wound the proper number of turns (Figure 3).
6. With the carrier to the right, connect the cord to the carrier return cord drum, position cord to the left over the idler pulley, around the left rear corner pulley and connect to the carrier using scissor clamps or the pusher end of a springhook (Figure 1).
7. Hold the slack out of the carrier return cord and rotate the turning wheel until the carrier goes to the left side frame. Stop hand cycling when the notch in the escapement cord drum is visible.
8. Connect the escapement cord to the escapement cord drum and wrap approximately 1 turn (two turns for 7X3) of the cord around the drum (Figure 2).
9. Thread the cord around the cord tension pulley and connect it to the carrier.
10. Pull the carrier return cord over the left front pulley

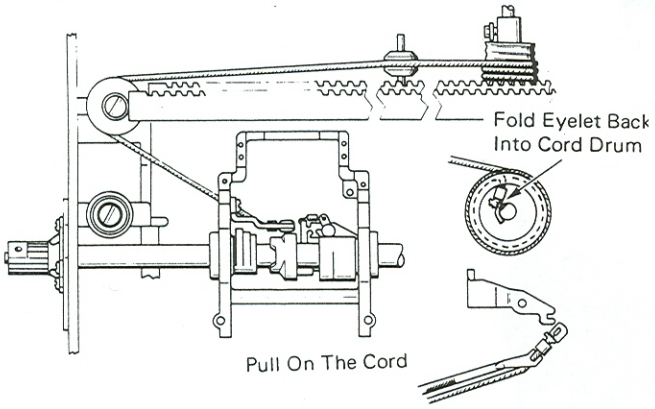

Figure 1

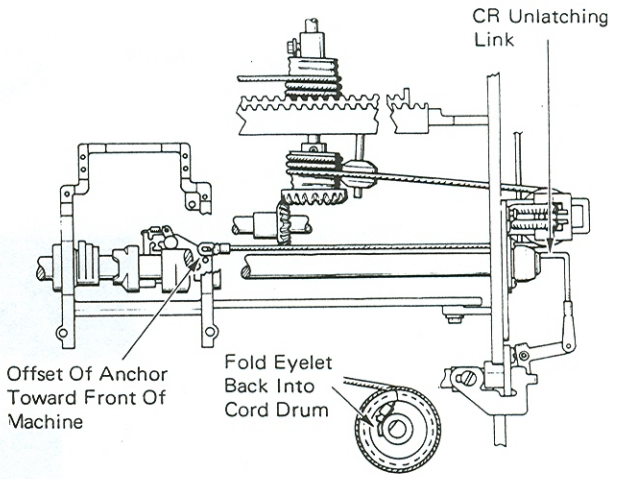

Figure 2

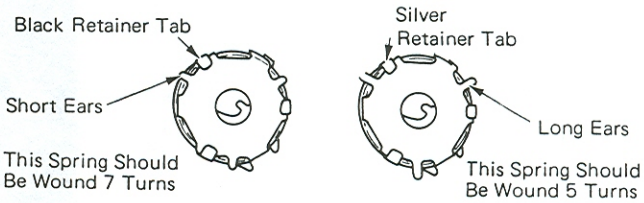

Figure 3

and connect the carrier return unlatching link.

11. By using cord anchor, a longer cord can be cut to the proper length.
12. When using the premeasured cords (white), one anchor lug can be cut for easy installation in the cord drum slot. After cutting the cord lug, check for burrs on the lug. If necessary, remove the sharp edges with a file.



DUAL TRANSPORT CHANGE

Change from the steel cable transport system to the dual transport system is possible without removing the backplate assembly.

1. Remove covers, platen, deflector and RH dust shield.
2. Remove switch from switch bracket.
3. Remove carrier return cable and tab cable.
4. Remove mainspring.
5. Remove carrier return shoe bracket.
6. Remove escapement shaft. This can be done without removing the backplate. Break off the cable tension arm (Figure 1). Hold the tension arm with a screwdriver and turn the escapement shaft (with gas pliers). This may damage the escapement shaft hub, which will be replaced with the new level.

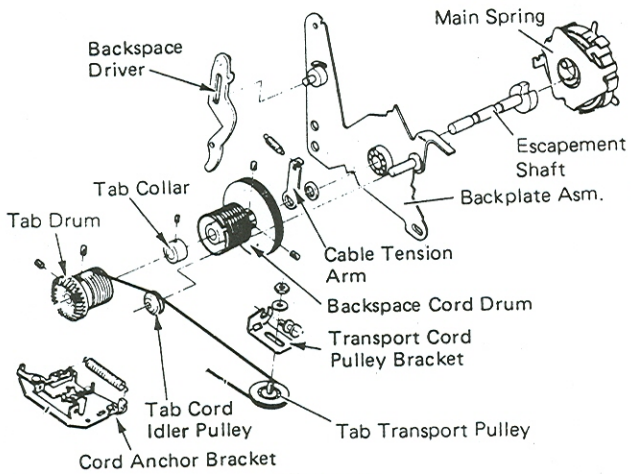

Figure 1

This process breaks out the D slot in the tension arm and will allow removal of the escapement shaft from the rear of the machine after setscrews are loosened in the tab drum and collar.

7. Remove the backspace driver.
8. Remove the backspace drum through the hole in the bottom of the power frame.
9. Remove the cord anchor bracket.
10. Remove the transport pulley bracket and pulley.
11. Remove the tab cord idler pulley.

Installation of the dual transport parts can be done by reversing the removal procedure (Figure 2). Use the appropriate adjustment section for the adjustment of these components. Also be sure to install the driver mounting stud with the head against the backplate. Installation of the carrier return steel cable and the tab cord is reviewed below:

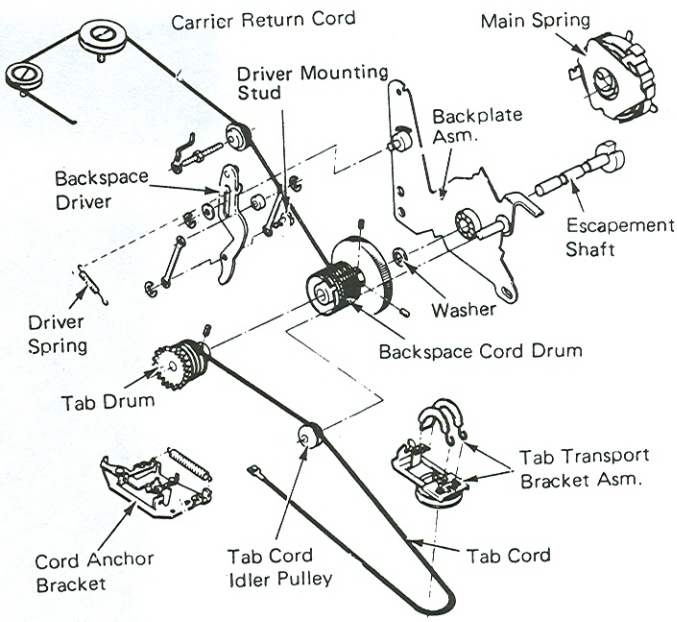

Figure 2

Dual Transport System Installation:

Before installing the tab and carrier return cord and cable, all other parts should be installed and adjusted properly.

1. Disconnect the carrier return unlatching link.
2. Manually latch the carrier return and turn the turning wheel while counting the number of rotations of the escapement shaft, until the mainspring is wound the proper number of turns (Figure 3).

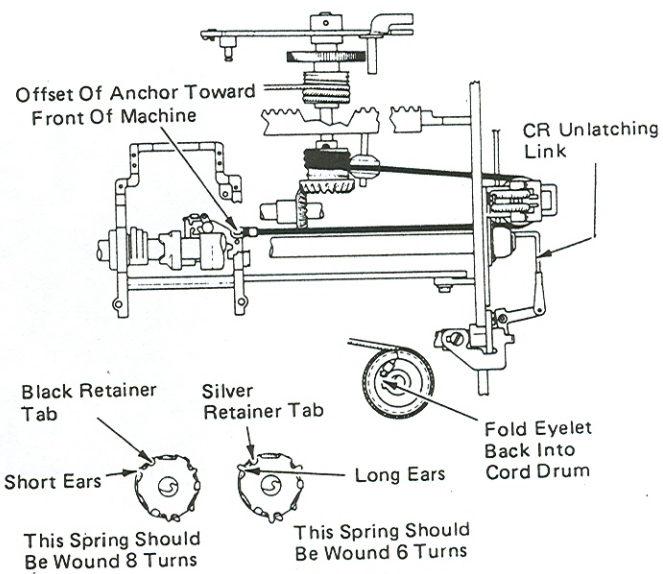

Figure 3

3. With the carrier all the way to the left, connect the tab cord to the carrier and position the cord through the right power frame and around the transport pulley; then connect it to the front drum (Figure 3). It is not necessary to wind the cord around the drum. With the cord attached to both ends, unlatch the carrier return and guide the cord on the drum while rotating turning wheel. (This will wind the rest of the cord on the drum.) Then place the cord on the cord idler pulley (Figure 1).
4. Turn machine on and space or tab the carrier over the operational shaft area for easier installation of the carrier return cable. Turn the machine off and be careful not to backspace or carrier return because it will unwind the tab card. Next, loosen the setscrews in the backspace drum. With the machine off, cycle a backspace until the driver engages the ratchet. This will help in the installation of the carrier return cable.
5. Attach the cable to the anchor bracket. (Use the fork end of a springhook.) Run the cable around the pulleys and tilt machine up. Hook the cable on the backspace drum and hold in position while rotating ratchet to wind the extra cable on the drum. This can be done by releasing the driver from the drum while holding and rotating the drum with the same hand; at the same time hold tension on the cable with a springhook from the left end of the machine. Do not position the cable around the front pulley and take up all extra cable and then tighten the backspace drum. Hook the cable over the front pulley and check for proper adjustment of the transport pulley.
6. Connect carrier return unlatching link.
7. Perform a functional check.

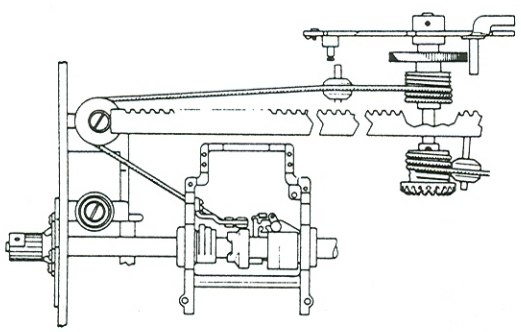

Figure 4

"A FRAME" PAPER FEED REMOVAL

The feed rolls may be removed from the "A frame" using the following procedure:

Carefully move the feed roll arm assembly and remove the front feed roll. Pivot the rear feed roll toward the front and remove.

The "A frame" is removed using the following procedure:

1. ("Selectric" II and Correcting "Selectric" Typewriters) Remove detent release lever and stud.
2. Remove the platen ratchet detent.
3. Remove the index link from the index pawl without changing its adjustment.
4. Remove index pawl overthrow stop.
5. (Dual Pitch) Disconnect half backspace links, loosen half backspace stop bracket nut and pivot bracket from under nut.
6. (Dual Pitch) Remove pitch cam cable from switch pitch sector gear.
7. Mark the position of the multiple copy control detent plate; loosen the screw and pivot the plate from under the screw.
8. Disconnect both anchor springs. These springs connect the paper feed assembly to the power frame.
9. Lift the paper feed assembly at the rear; pull toward the rear of the machine and remove the assembly.

   NOTE: Removing the "A frame" assembly will allow easy access to rotary backspace, escapement bracket and transport cords.

REMOVAL OF 27 TOOTH RATCHET ASSEMBLY

1. Remove feed roll release lever.
2. Remove selector lever. Move grip clip to left until clip disengages from selector lever.
3. Remove selector lever mounting stud. Keep stud, clip and spacer. These will be used later.
4. Remove pawl assembly.
5. Remove detent release lever.
6. Remove detent release lever mounting stud.
7. Disconnect tilt spring. Remove right tilt pulley bracket and keeper.
8. Remove detent.

INSTALLATION OF 54 TOOTH RATCHET ASSEMBLY

1. Install grip clip, index bracket and spacer on index selector lever mounting stud.
2. Install selector cam on index selector lever using stud and "C" clip.
3. Install stud with nut and washer on index bracket.
4. Install selector lever.
5. Install spring on stud and engage selector cam and hold in place with "C" clip.
6. Remove detent roller from old-level detent assembly and install on new detent.
7. Install detent assembly using stud that was in machine and detent release lever mounting stud.
8. Install "C" clip that was on stud.
9. Install tilt pulley bracket and keeper. Connect tilt spring.
10. Install detent release lever.
11. Install pawl assembly.
12. Install feed roll release lever.

ESCAPEMENT RACK REMOVAL (DUAL PITCH)

1. Remove the platen, deflector and feed rolls.
2. Disconnect the margin pitch link from the escapement rack gear.
3. Loosen the switch pitch sector gear screws and move it to the rear of the machine.
4. Remove the escapement rack gear.
5. Remove the escapement rack bearing plate and compression spring.
6. Disconnect the lower half backspace link and remove the half backspace intermediate lever and bellcrank link.
7. Remove the half backspace bellcrank mounting screw and spacer from the power frame.
8. Operate the tab to get the escapement pawl out of the escapement rack. As you pull the escapement rack from the machine, disengage and remove the half backspace bellcrank.
9. The following adjustments should be checked after the escapement rack is replaced.

    a. Half backspace motion
    b. Half backspace rest position
    c. Escapement rack gear
    d. Escapement rack gear lower stop
    e. Switch pitch sector gear
    f. Pitch cable

MARGIN RACK AND RAIL REMOVAL (DUAL PITCH)

1. Remove the margin rack gear toggle spring and gear guard.
2. Loosen the margin pitch link guide bracket.
3. Disconnect the margin release bracket spring.
4. Loosen the margin release bracket screws and slide the margin release bracket to the rear.
5. Disengage the margin sliders by holding the margin set levers to the rear. Slide the margin rack out of the machine. Note the position of the margin rack spring, washer and bushing.
6. Lift the margin rail out of the machine.
7. Remove the margin rack gear if necessary.
8. The following adjustments should be checked after the margin rack and rail are replaced.

    a. Margin pitch link guide bracket
    b. Margin rack gear
    c. Front margin rack gear stop

CARRIER RETURN/BACKSPACE CABLE DRUM ASSEMBLY REMOVAL (RB/S)

1. Position the carrier at the far right.
2. Remove the switch and swing it out of the way.
3. Carefully remove the mainspring.
4. Remove the backspace bellcrank retainer.
5. Remove the pin and "C" clip connecting the driver links to the driver.
6. Remove the index interlock link and the left-hand index interlock shaft clip. Slide the index interlock shaft toward the right.
7. Remove the index multiplying lever stop and switch bracket screws.
8. Remove the mainspring hub.
9. Remove the two screws that mount the paper feed support to its bracket.
10. Disconnect the backspace bellcrank spring.
11. Remove the mainspring backplate screws and remove the paper feed support bracket.
12. Slide the mainspring backplate from the escapement shaft, leaving the backspace bellcrank in its position in front of the ratchet.
13. Remove the cable tension spring, arm and spacer.
14. Remove the CR/BS cable drum assembly and disengage the cable.
15. When installing a new drum assembly, engage the cable, align it properly and install the cable tension spacer, arm and spring. This procedure will hold the cables in place.
16. Reinstall the remaining parts in reverse order.
17. The following adjustments should be checked:

    a. Paper feed support
    b. Switch bracket
    c. Mainspring hub
    d. Escapement shaft collar
    e. Transport cable tension
    f. Backspace motion
    g. Backspace latch height
    h. Index interlock shaft
    i. Index interlock paddle
    j. Index multiplying lever stop

COMPENSATOR BALLS REMOVAL

1. Remove covers.
2. With the machine tilted up, raise the interposer tails.

    TIP: The interposer can be held out of the compensator tube by inserting a drive belt between the filter shaft and interposers.

3. Remove the right-hand end plug.
4. The compensator balls may now be removed by carefully tilting the machine to the right. The compensator balls may be cleaned by IBM cleaning fluid.
5. Reverse procedure for installation.

    CAUTION: There must be a compensator ball on the outside of position 0 and position 43 interposers.

6. The compensator tube adjustment must be made after replacing the compensator balls.

LUBRICATION GUIDE

The "Selectric" Typewriter will not operate reliably if it is not properly lubricated.

Use IBM No. 10 oil on the following:

a. Print shaft wipers
b. Cycle shaft bearing
c. Margin rack bearing
d. Margin rack bearing
e. Carrier shoe
f. Rotate detent guide, upper and lower ball sockets, tilt detent pivots
g. Motor
h. Selection bail rollers
i. Index pawl assembly
j. All power operated links and clevises at both ends
k. Ribbon feed and reverse plate

l. B/S intermediate lever
m. Differential assemblies
n. All functional parts and pivots in operational box assembly
o. Tilt arm pivot and rotate link stud
p. Rotate arm pivot and rotate link pivot studs
q. Carbon ribbon drive spring and bearing
r. Power frame center bushing
s. Platen bushings
t. All other rotating or pivoting parts at the bearing area which are not exceptions in the listing following

Use IBM No. 23 grease on the following:

a. Operation ratchets
b. Keylever return springs
c. Interposer latch springs
d. Ribbon lift control lever
e. Linelock bracket
f. Filter shaft flutes
g. Operational keylever pawl guide studs
h. Tape guide
i. All cams on print sleeve
j. Ball joint
k. Cycle clutch and shift clutch springs
l. Feed roll bearing
m. Cycle clutch restoring cam
n. Low velocity latch contacts
o. All sliding parts except those listed for No. 10 oil